Nikon®

Nikon Advanced Systems Dealer Catalog Supplement

Nikon

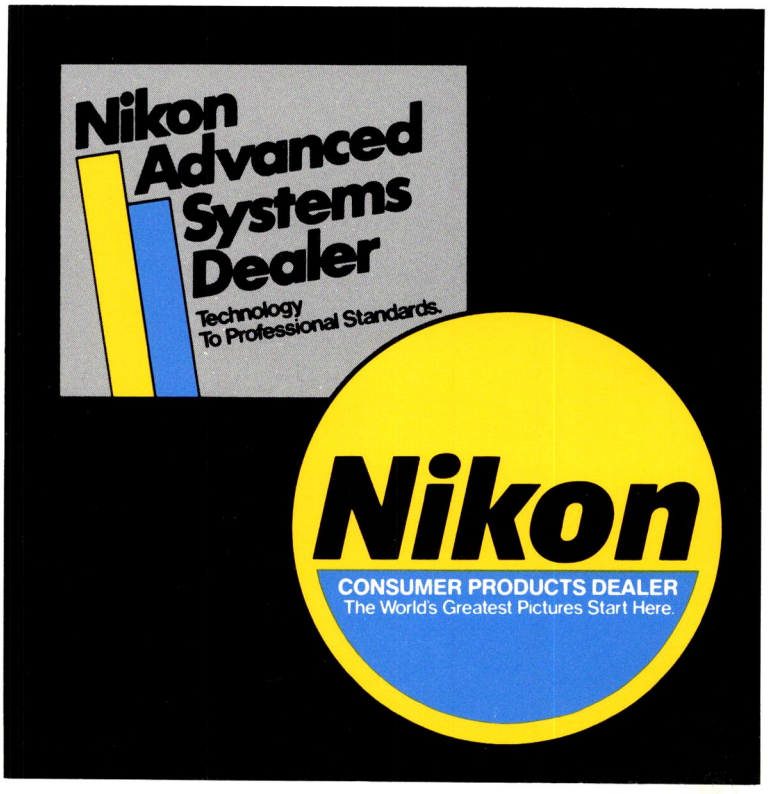
Nikon
Advanced
Systems
Dealer
Technology
To Professional Standards.
Nikon
CONSUMER PRODUCTS DEALER
The World's Greatest Pictures Start Here.

A History of Nikon Cameras

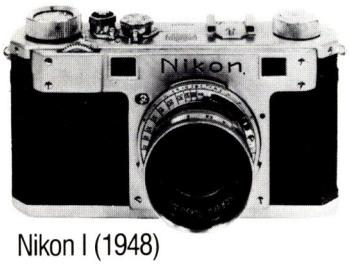

Nikon I (1948)

Nikon M (1950)

Nikon S (1951)

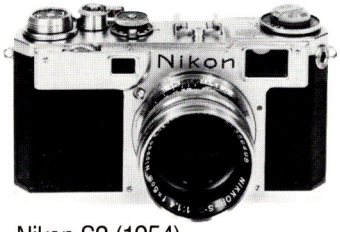

Nikon S2 (1954)

Nikon SP (1957)

Nikon S3 (1958)

Nikon S4 (1959)

Nikon F (1959)

Nikon S3M (1960)

Nikon F Photomic (1962)

Nikonos I (1963)

Nikkormat FS (1965)

Nikkormat FT (1965)

Nikon F Photomic T (1965)

Nikon F Photomic Tn (1967)

A History of Nikon Cameras

Nikkormat FTn (1967)

Nikonos II (1968)

Nikon F Photomic FTn (1968)

Nikon F2 Eyelevel (1971)

Nikon F2 Photomic (1972)

Nikkormat EL (1972)

Nikon F2S Photomic (1973)

Nikkormat FT2 (1975)

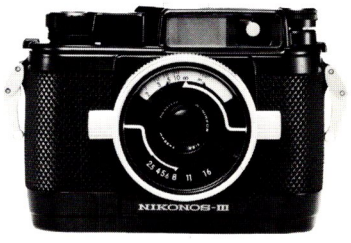

Nikonos III (1975)

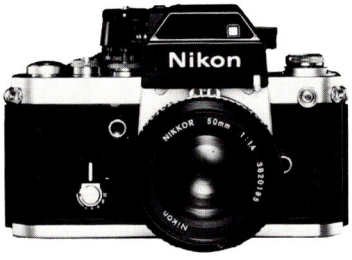

Nikon F2SB Photomic (1976)

Nikkormat ELW (1976)

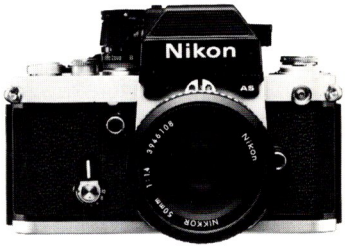

Nikon F2AS Photomic (1977)

Nikon EL2 (1977)

Nikon F2A Photomic (1977)

Nikkormat FT3 (1977)

A History of Nikon Cameras

Nikon FG-20 (1984)

Nikon F3 (1984)

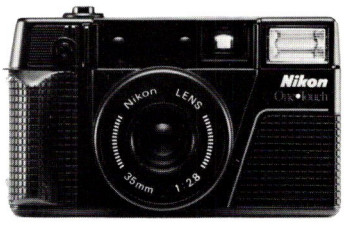

Nikon L35AF (1984)

Nikon N2000 (1985)

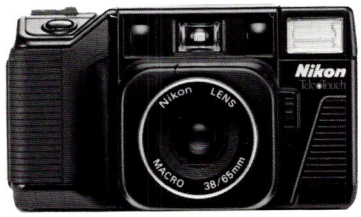

Nikon Tele-Touch (1986)

Nikon Action-Touch (1986)

Nikon N2020 (1986)

Nikon One-Touch (1987)

Nikon Fun-Touch (1987)

Nikon Tele-Touch Deluxe (1987)

Nikon N4004 (1987)

Nikon N8008 (1988)

Nikon Zoom-Touch 500 (1988)

Nikon One-Touch 100 (1988)

Nikon F4S (1988)

A History of Nikon Cameras

Nikon N4004S (1988)

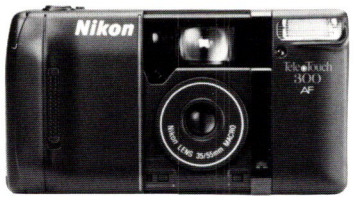

Nikon Tele-Touch 300 (1988)

Nikon N6006 (1990)

Nikon N6000 (1990)

Nikon Zoom-Touch 400 (1990)

Nikon N8008s (1991)

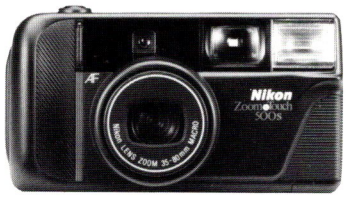

Nikon Zoom-Touch 500s (1991)

Nikon N5005 (1991)

Nikon One-Touch 200 (1991)

TABLE OF CONTENTS

Nikon Advanced Systems Dealer

	Page
SLR CAMERA BODIES	
NAS Product Accessory Compatibility Chart	2
F4S	4
F3HP, F3/T	6
N8008	8
N8008s	10A
NCP Product Accessory Compatibility Chart	11A
N5005	12
N6006	13A
N6000	13C
N4004S	14
N2000	16
FM2	18
AUTOFOCUS COMPACTS	
Zoom-Touch 500s	20A
Zoom-Touch 500	21
Zoom-Touch 400	22A
Tele-Touch 300	23
One-Touch 200	24A
One-Touch 100	25
Tele-Touch Deluxe	26
Action-Touch	28
LENSES	
AI Lens Table	31
AF Lens Table	33
Fisheye Lenses	35
Wide Angle Lenses	37
Normal Lenses	42
Telephoto Lenses	43
Nikkor ED Lenses	47
Reflex Lenses	53
Zoom Lenses	54
Special Lenses	58
AF Lenses	63
Teleconverters & Extension Tubes	77
Depth of Field Tables	83
Depth of Field Scale for Zoom Lenses	99

TABLE OF CONTENTS

	Page
SPECIAL OPTICS	
EL Nikkor Enlarging Lenses	103
Large Format Lenses	111
Nikkor M	113
Nikkor SW	114
Nikkor W	117
Nikkor-T ED	121
Nikkor-AM ED	125
Special Application Lenses	127
SLR ACCESSORIES	
SLR Viewfinders	131
Data Backs & Motor Drives	145
Speedlights	159
Close-Up Equipment	177
General Camera Accessories	191
Everyready Camera Cases	203
Battery Selector Chart	211
NIKONOS	
Nikonos-V	213
UW Nikkor Lenses	215
UW Speedlights	218
Accessories	220
BINOCULARS	
Companion Series	225
Companion Deluxe Series	226
Gold Sentinel Series	227
Criterion Series	228
Sea 'N Sport Series	230
StayFocus Plus Series	234
Action Series	235
VIDEO CAMCORDERS	
Camcorders	236A
Accessories	243

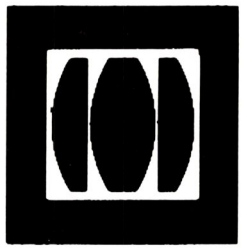

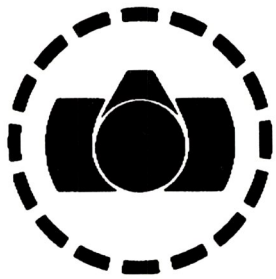

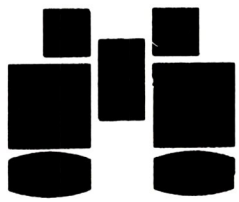

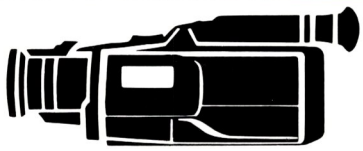

F4S

F3HP

F3/T

N8008

N8008s

Nikon Advanced Systems Dealer

Nikon Advanced Systems Dealer

ACCESSORY COMPATIBILITY

SPEEDLIGHTS

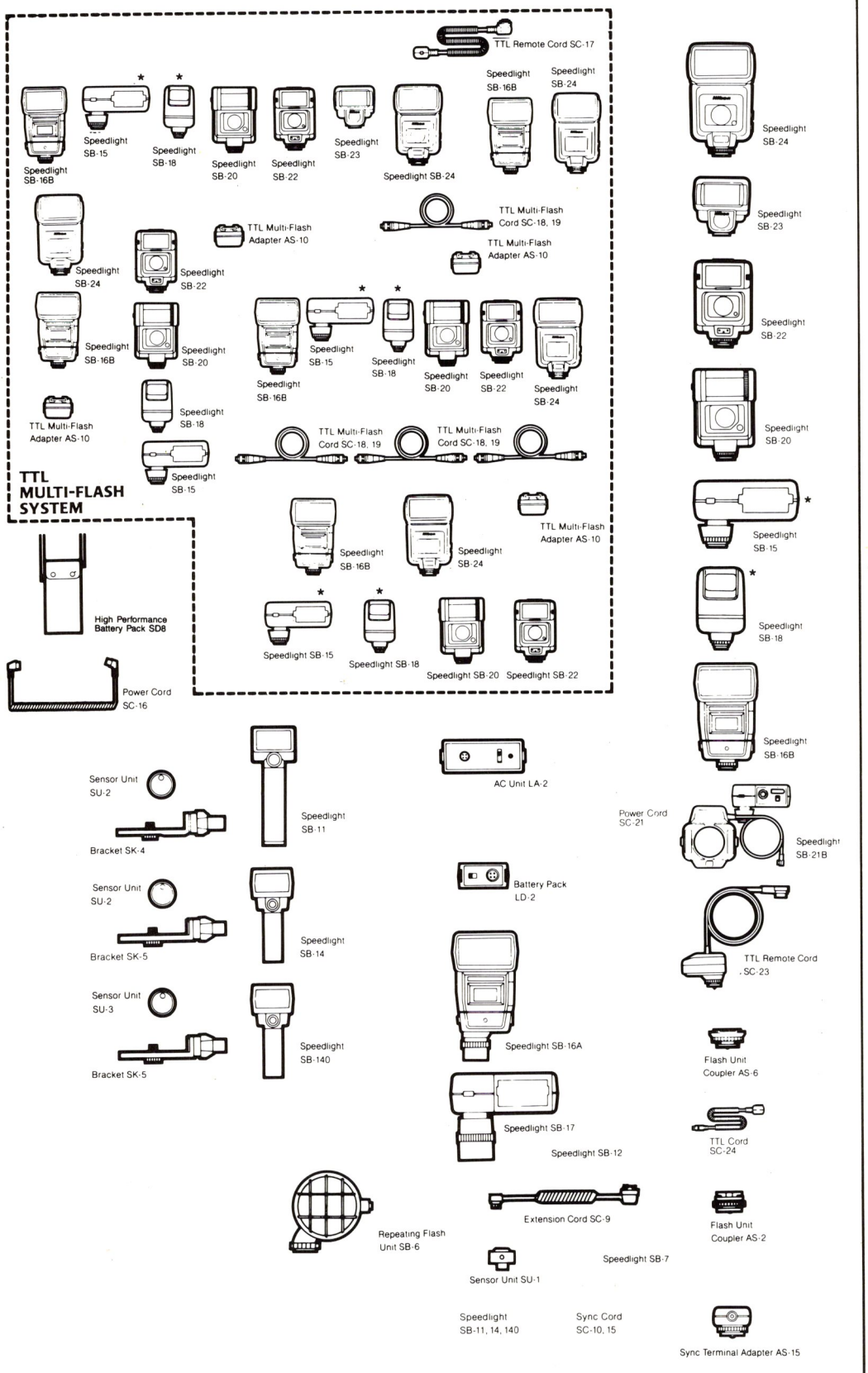

*Discontinued Product

CAMERA CASES

F4S

CF-41
CF-42
CF-43 (with high speed Battery Pack MB-21)

N8008s

CF-39
CF-39D with MF-20 Back
CF-40
AH-4 Hand Strap

F3HP, F3/T

CF-21
CF-22
CF-23D with MF-14 Back
CF-24

F4S

F3HP

N8008s

Nikon Advanced Systems Dealer

F4S FINDERS ACCESSORIES

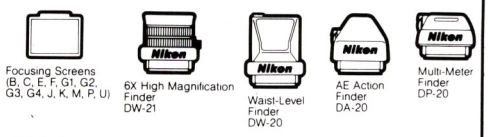

EYEPIECES (ALL MODELS)

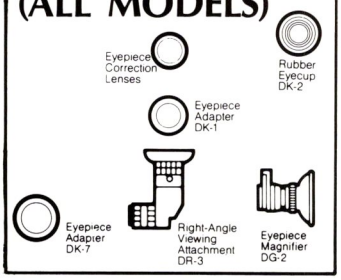

CAMERA BACKS

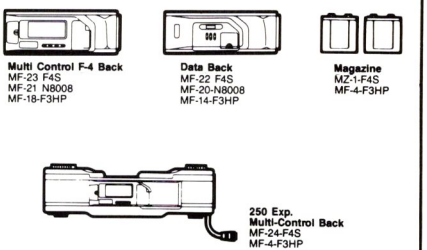

F3HP FINDERS & ACCESSORIES

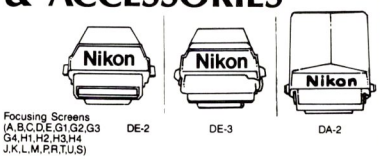

N8008s FINDER ACCESSORIES

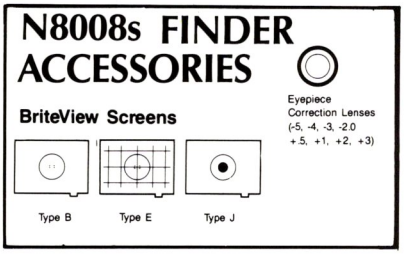

POWER SOURCES

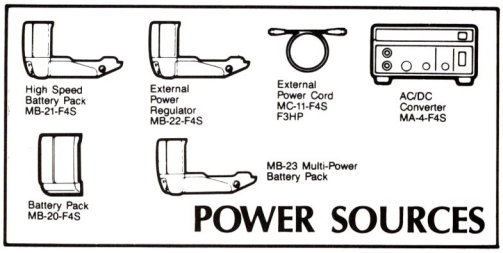

CLOSE-UP ACCESSORIES (FOR ALL MODELS)

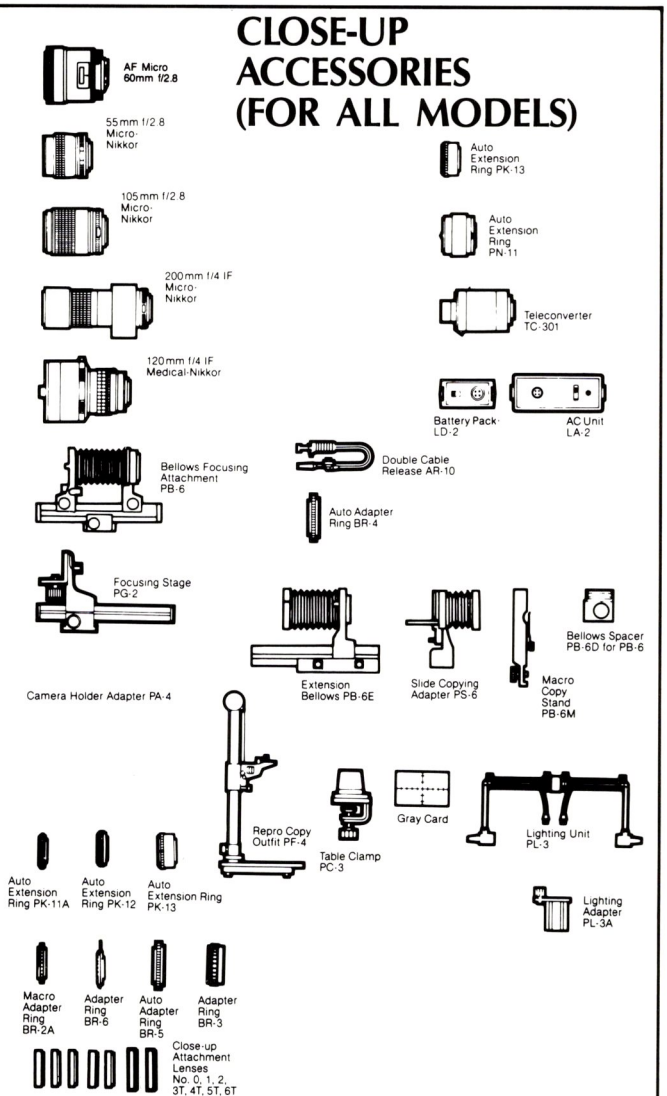

REMOTE CONTROL ACCESSORIES (FOR ALL MODELS)

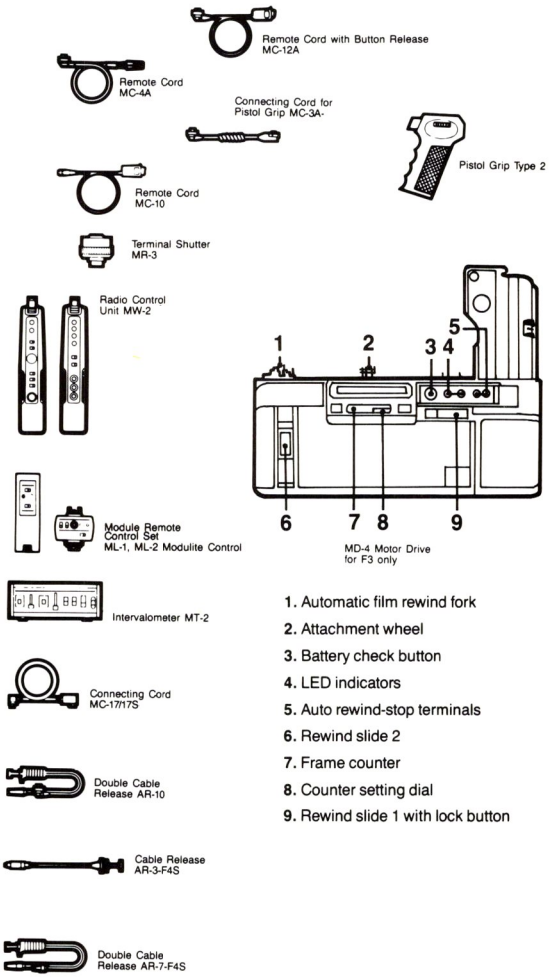

1. Automatic film rewind fork
2. Attachment wheel
3. Battery check button
4. LED indicators
5. Auto rewind-stop terminals
6. Rewind slide 2
7. Frame counter
8. Counter setting dial
9. Rewind slide 1 with lock button

Nikon F4S

Nikon Advanced Systems Dealer

Product number:	1791 (With MB-21 High Speed Battery Pack)
Type of camera:	Electronically-controlled, professional 35mm single-lens-reflex camera with autofocus and built-in high-speed motor drive
Picture format:	24mm x 36mm (standard 35mm format)
Lens mount:	Nikon F bayonet with autofocus contacts
Lenses:	More than 70 Nikkor and Series E SLR lenses in all; more than 15 AF Nikkor lenses for full automatic focus and exposure operation; more than 50 non-autofocus AI lenses for "A" mode automatic and "M" mode manual exposure operation
Focus modes:	Single-servo ("S") autofocus, Continuous-servo ("C") autofocus and Manual ("M") focus with electronic rangefinder; electronic rangefinder operation with lenses of maximum aperture f/5.6 or brighter
Autofocus detection:	TTL phase-detection system using Nikon advanced AM200 autofocus module; system equipped with 200-segment CCD sensor unit
AF detection range:	EV minus 1 to EV 18 (ISO 100)
Autofocus lock:	Via shutter release button in "S" focus mode or AF lock button (AF-L) in "C" focus mode
Exposure metering:	5% Spot metering with any viewfinder via light sensor mounted within camera body; traditional 60/40 center-weighted metering via circuitry provided in DP-20 Multi-Meter Finder (standard) and DA-20 Action Finder (optional); Nikon-exclusive Matrix metering for automatic control of difficult lighting conditions via standard DP-20 finder using multi-segment silicon-photo-diode (SPD) sensors; advanced built-in micro computer integrates metering functions with flash photography for balanced fill-flash operation with Nikon TTL Speedlights
Exposure control:	Automatic exposure modes of "A" (aperture-prior "S" (shutter-priority), "P" (normal programmed exposure), and "P_{HI}" (high-speed-weighted programmed exposure) via mode selector; manual exposure control of camera provided at "M" mode setting
Metering range:	EV 0 to EV 21 with Center-weighted and Matrix metering: EV 2 to EV 21 with Spot metering (ISO 100 and f/1.4 lens)
Shutter:	Electromagnetically-controlled, vertical-travel high-speed focal plane shutter; aluminum and carbon-fiber shutter blades ensure highly accurate and high speed operation; equipped with special tungsten shutter balance for maximum reduction of shutter vibration
Shutter control:	Speed control via lithium niobate oscillator; 16 shutter speed settings (1 EV steps) of from 1/8000 sec. to 4 sec. for camera operation in "S" (shutter-priority) automatic and "M" (manual) exposure control modes; stepless operation of from 1/8000 sec. to 30 sec. for camera operation in "P" (normal program), "P_{HI}" (high-speed-weighted-program) and "A" (aperture-priority) automatic exposure control modes; additional settings of "B" (bulb), "T" (time) and "X" (1/250 sec. for flash sync.) provided; selection of speed settings via top-mounted shutter-speed dial; safety lock for electronic flash synchronization ("X") setting
Viewfinder:	Interchangeable finder system; DP-20 Multi-Meter Finder as standard; extensive finder and screen viewing system available as option; virtually 100% viewfinder coverage provided
Viewfinder display:	Camera body equipped with large LCD and LED panels for miscellaneous information display with any camera finder; additional LCD panel provided with standard DP-20 finder; finder display of all e posure information in all modes, compensation values, focusing indicators, flash ready-light and frame counter provided as standard via various finder-visible LCD panels; LCD illuminators provided in camera body and DP-20 finder; illuminator ON/OFF switch provided on camera body at base of shutter-speed selector dial

Focusing screens: Interchangeable screen system; camera equipped with Type B advanced BriteView screen featuring overall matte/Fresnel field with central autofocus reference brackets and reference circles for Spot (5mm) and Center-weighted metering; 12 optional F4S-dedicated screens available

Film speed range: Via top-mounted film speed selector dial; settings provided for manual selection of film speeds of from ISO 6 to ISO 6400 in 1/3 EV steps, plus "DX" position for selection of automatic film speed sensing via DX-code contacts; with DX-code operation, film speed range of from ISO 25 to ISO 5000 is provided

Film transport: Film advance via built-in high-speed motor drive; motor firing mode selection enables choice of Single-frame ("S"), Continuous-Hi-Speed ("C_H"), Continuous-Lo-Speed ("C_L") and Continuous-"Silent" ("C_S") rates of fire; shooting speed of up to 5.7 fps (frames/second) are possible; choice of powered or manual film rewind provided; operation of rewind lever "R1" alone enables manual rewind via crank provided; operation of levers "R1" and "R2" enables powered rewind with automatic stop to completion of rewind cycle

Self-timer: Electronically-controlled timer with 10-second delay provided; flashing LED indicates operation; timer operation cancellable

Flash hot shoe: Standard ISO-type shoe with supplemental contacts for operation with Nikon-dedicated electronic Speedlights; hot shoe contacts enable finder ready-light and TTL flash control interface

Flash synchronization: "X"-type synchronizaiton for electronic flash units possible at manual shutter speeds settings of from 1/250 sec. to 30 sec., plus "B", "T" and "X"; when camera operated in fully automatic programmed exposure modes with selected Nikon TTL Speedlights, shutter speeds of from 1/250 sec. to 1/60 sec. are selected automatically via cybernetic flash sync operation to achieve balanced fill-flash effects

Power source: Nikon MB-21 High Speed Battery Pack (six AA-type batteries) as standard; MB-20 Battery Pack (four AA-type batteries) and MB-22 External Power Regulator (for connection to alternative voltage sources) as option

Nikon MB-23 Multi-Power High Speed Battery Pack is an optional accessory for the F4S. Used in conjunction with the Nikon NiCad Battery MN-20, and the Quick Charger MH-20 will allow you to charge up to two batteries sequentially, operated automatically and turn off automatically upon completion of charging. The MB-23 along with the MN-20 also delivers improved operation at low temperatures.

Dimensions (WxHxD): 168.5 x 138 x 76.6mm (6.6 x 5.4 x 3.0 in.) with MB-21 High Speed Battery Pack; 168.5 x 117 x 76.6mm (6.6 x 4.6 x 3.0 in.) with MB-20 Battery Pack

Weight: Approx. 1,280g (45.1 oz.) with MB-21 High Speed Battery Pack (without batteries); approx. 1.090g (38.4 oz.) with MB-20 Battery Pack (without batteries)

Nikon F4S Viewfinder Display

(1) Exposure Compensation Value
(2) Frame Counter
(3) ADR (Aperture Direct Readout)
(4) Focus Indicators
(5) Exposure Compensation Indicator
(6) Flash Ready-light Signal
(7) Camera Body Side Display
(8) Camera Focus Brackets
(9) 12mm-dia. Reference Circle
(10) 5mm-dia. Reference Circle
(11) DP-20 Finder Side Display
(12) Metering System
(13) Shutter Speed
(14) AE-Lock Indicator
(15) Aperture (P/S)
A (A)
No indication (M)
(16) P (P)
No indication (S/A/M)
(17) S (S)
No indication (P/A/M)
(18) Electronic Analog Display (M)
No indication (P/S/A)

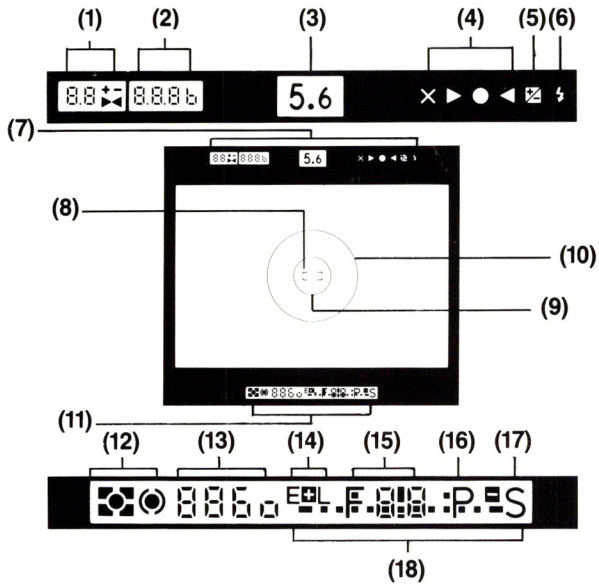

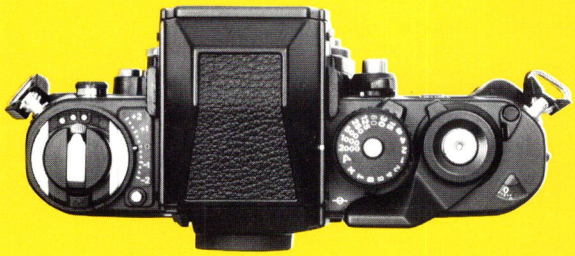

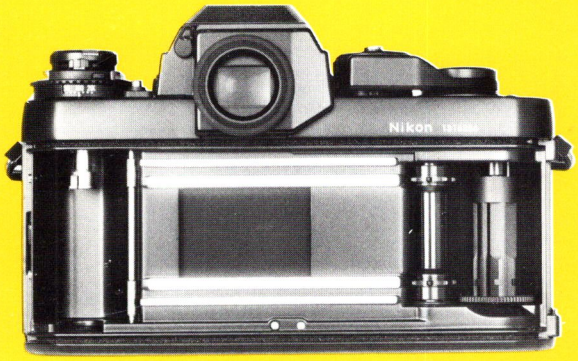

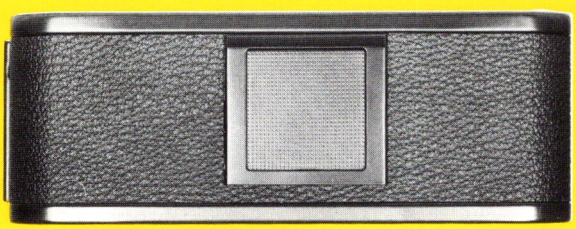

Nikon F3HP

Nikon Advanced Systems Dealer

Product number:	1691
Type of camera:	Electronically-controlled, single-lens-reflex camera
Picture format:	24mm x 36mm (standard 35mm format)
Lens mount:	Nikon F bayonet
Lenses:	More than 70 Nikkor and Nikon Series E lenses
Shutter:	Horizontal-travel, titanium foil, focal-plane shutter
Shutter release:	Electromagnetic type switches meter on when depressed halfway (after shutter release lock is released); meter then remains on for 16 sec. after finger is taken off the shutter release button; release button threaded to accept ISO-type standard cable release
Backup mechanical release:	Lever provided to trigger camera at mechanical 1/60 sec. exposure time, regardless of the exposure setting (except at T); used to conserve battery power, for T (Time) exposures, or when battery power is exhausted
Automatic exposure control:	Aperture-priority, automatic exposure control with stepless shutter speeds from 8 sec. to 1/2000 sec.
Manual exposure control:	Quartz digital control for 16 stepped shutter speeds from 8 sec. to 1/2000 sec., including X (1/80 sec); B (Bulb) and T (Time) also provided
Mechanical shutter control:	Possible using backup mechanical release lever at T (Time) setting on shutter speed dial, or at 1/60 sec. when shutter speed dial set to any other setting
Viewfinder:	DE-3 High-eyepoint Eyelevel Finder as standard; interchangeable with other viewfinders; 0.75X magnification with 50mm lens; virtually 100% coverage
Eyepiece shutter:	Provided; prevents light from entering the finder eyepiece under remote-control operating conditions
Focusing screen:	Type K as standard; 21 other types as optional accessories
Exposure metering:	Thru-the-lens (TTL) light metering; silicon photodiode and metering circuits incorporated into camera body; meter works with all interchangeable viewfinders and interchangeable finder screens
Metering range:	EV1 to EV18 (f/1.4 at 1 sec. to f/11 at 1/2000 sec.) with 50mm f/1.4 lens and ISO 100 film
Film speed setting:	ISO 12 to 6400
Accessory shoe:	Provided; special Nikon type located at base of rewind knob; accepts direct mount Speedlights SB-16A, SB-17 and SB-21A, as well as accessory cords SC-12 and SC-14; two optional flash adapters available for flash units with ISO hot shoe contacts and for flash unit for Nikon F2
Flash synchronization:	All speeds of from 8 sec. to 1/60 sec., plus X (1/80 sec.) with electronic flash; with F3-dedicated speedlights, the shutter speed is automatically set to 1/80 sec at A (automatic operation) or at manual shutter speed settings of 1/125 sec. and faster; synchronization is also possible at slower speeds; threaded PC-type sync terminal provided at front of camera for off-camera and mutiple-flash photography
Viewfinder display:	Liquid crystal display shows shutter speed; on auto, +2000 indicates overexposure and -8- indicates underexposure; on manual, M appears with + indicating overexposure, - indicating underexposure or - and + simultaneously indicating correct exposure; LED ready light glows when F3-dedicated speedlights are ready; the lens aperture in use is also shown in the viewfinder via the aperture-direct-readout (ADR) scale provided on all AI and AIS lenses
Viewfinder illuminator:	Provided; illuminates both LCD panel in camera and ADR scale on lens aperture ring of AI and AIS Nikkor lenses
Exposure compensation:	Provided; from +2 to -2 in one-third step increments
Exposure memory:	Possible via front-mounted lock button

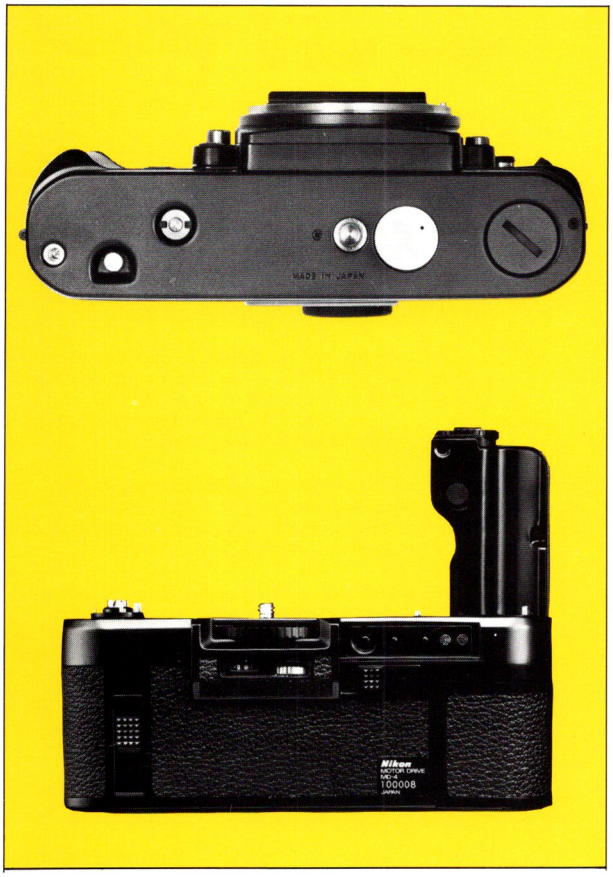

Multiple exposure:	Possible via top-mounted lever
Self timer:	Quartz-controlled, 10 sec. delayed exposure; LED blinks at 2 hz. for the first 8 sec., and at 8 hz. for the last 2 sec.
Reflex mirror:	Automatic, instant-return type with lock-up facility; incorporates brake mechanism and air damper for reduced vibration and noise
Depth-of-field preview:	Possible via button fitted coaxial with the mirror lock-up lever
Film advance lever:	30° stand-off angle and 140° winding angle; wound in single stroke or series of smaller strokes
Frame counter:	Additive type; automatically reset when camera back is opened
Film rewind:	Via rewind crank after depressing film rewind button; automatic film rewind possible with MD-4 Motor Drive
Camera back:	Interchangeable with optional special-purpose backs; opened by pulling up the film rewind knob (after unlocking)
Batteries:	Two 1.5V silver-oxide (button cell) batteries; when optional MD-4 Motor Drive is mounted, the camera receives all power from the motor drive batteries
Dimensions (HxWxD):	Approx. 101.5 x 148.5 x 69.0mm (4″x5.8″x2.7″)
Weight:	Approx. 760g (26.8 oz.), body only
Optional accessories:	Eyelevel Finder DE-2 Action Finder DA-2 Waist-Level Finder DW-3 High-Magnification Finder DW-4 Motor Drive MD-4 Miscellaneous focusing screens Speedlights SB-11/14/140/16A/17/21A Data Backs MF-14/17/18 250-ex Magazine Back MF-4 Auto Rewind-Stop Back MF-6B Eyepiece Adapter Ring DK-3

Nikon F3HP Viewfinder Display

lock and exposure compensation dial.

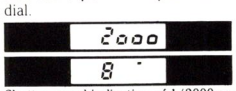

Shutter speed indication of 1/2000 sec. and 8 sec.

metering.

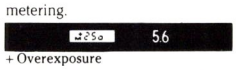

+ Overexposure

– Underexposure

– + Correct exposure

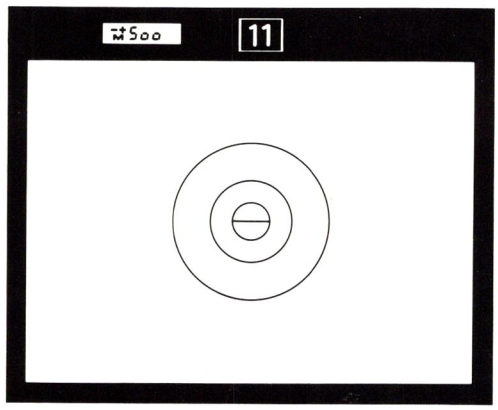

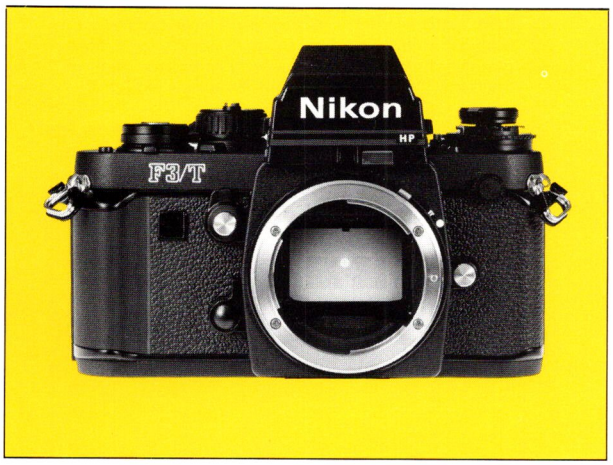

Nikon F3/T

Product number:	1694
Type of camera:	The Nikon F3/T is a ruggedized version of the Nikon F3HP; the use of titanium outer covers makes this camera ideal for heavy-duty users, such as photojournalists.

Nikon N8008

Nikon Advanced Systems Dealer

Product number:	1760
Type of camera:	Electronically-controlled, advanced 35mm autofocus single lens reflex camera with built-in motor drive
Picture format:	24mm x 36mm (standard 35mm format)
Lens mount:	Nikon F bayonet with autofocus contacts
Lenses:	More than 70 Nikkor and Series E SLR lenses in all; more than 15 AF Nikkor lenses for full automatic focus and exposure operation; more than 50 non-autofocus AI lenses for "A" mode automatic and "M" mode manual exposure operation.
Focus modes:	Single-servo (S) autofocus, continuous-servo (C) autofocus and manual (M) focus with electronic rangefinder; electronic rangefinder operation with lenses of maximum aperture f/5.6 or brighter
Autofocus detection:	TTL phase detection system using Nikon advanced AM200 autofocus module; system equipped with 200-segment CCD sensor unit
AF detection range:	EV minus 1 to EV 19 (ISO 100)
Autofocus lock:	Via shutter release button in "S" focus mode or autofocus lock button (AF-L) in "C" focus mode
Autofocus sensing:	TTL full aperture exposure measurement via five-segment silicon photo-diode (SPD)
Exposure metering:	Matrix metering via multi-segment SPD for automatic exposure control of difficult lighting conditions; center-weighted automatic exposure control also available via user selection; advanced built-in microcomputer integrates Matrix metering functions with flash photography for balanced fill-flash operation with Nikon TTL Speedlights
Exposure control:	Automatic exposure modes of "A" (aperture-priority), "S" (shutter-priority), "P" (normal programmed exposure), "P_{HI}" (hi-speed program) and "P_D" (dual program) via mode selection; flexible program operation via the Command Input Control Dial, during P/PH_i/P_D modes; full manual exposure control of camera provided during modes at "M" setting
Metering range:	EV 0 to EV 21 (ISO 100 and f/1.4 lens)
Shutter:	Electromagnetically controlled, vertical-travel high-speed focal plane shutter
Shutter control:	Speed control via lithium niobate oscillator; setting of from 30 second to 1/8000 second provided in "M" exposure mode; stepless operation in automatic modes
Viewfinder:	Fixed eyelevel pentaprism type; long eye relief provided via high-eyepoint design; 0.75x magnification; 92% finder coverage provided
Focusing screen:	Nikon advanced Type B BriteView focusing screen; field features matte fresnel area with central reference circle and focusing brackets; excellent general-purpose screen; interchangeable with optional Type E and Type J BriteView screens
Viewfinder display:	LCD viewfinder display provided directly below the image field; display panel provides for virtually all information to be visible within viewfinder; equipped with illuminator for operation under low-light shooting conditions
Usable film speed range:	ISO 25 to 5000 for DX-coded film; ISO 6 to 6400 for manual film speed setting
Film advance:	Single-frame motor advance at "S" motor setting; continuous frame settings provided at "CH" (3.3 fps) and "CL" (2.0 fps)

Self-timer:	Electronically controlled duration, selectable in steps of from 2 sec. to 30 sec. duration per frame; two-shot operation possible
Exposure compensation:	Via selector dial in 1/3 EV steps; total range of from +5 to -5 EV provided
Depth-of-field preview:	Via front-mount button
Flash hot shoe:	Stardard ISO-type shoe with supplemental contacts for operation with Nikon-dedicated electronic Speedlights; maximum flash speed setting of 1/250 sec. provided
Power source:	Four AA-type (penlight) batteries
Dimensions:	6.0″ x 4.0″ x 2.6″ (WxHxD)
Weight:	24.5 oz. (body only, without batteries)

Nikon N8008 Viewfinder & Top Cover LCD Displays

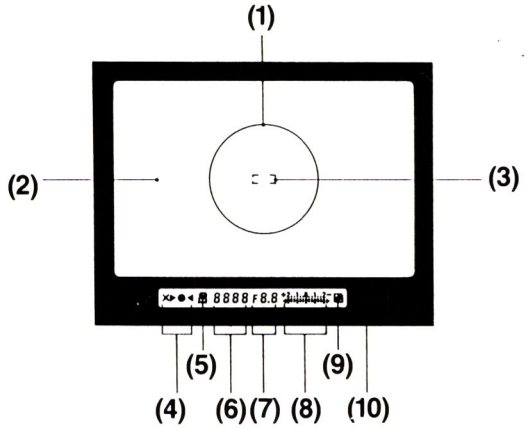

Viewfinder LCD Display

(1)	12mm-dia. central area
(2)	Clear matte field
(3)	Focus brackets
(4)	Focus indicators
(5)	Exposure mode
(6)	Shutter speed/film speed
(7)	Aperture/exposure compensation value
(8)	Electronic analog display
(9)	Exposure compensation mark
(10)	Ready-light LED

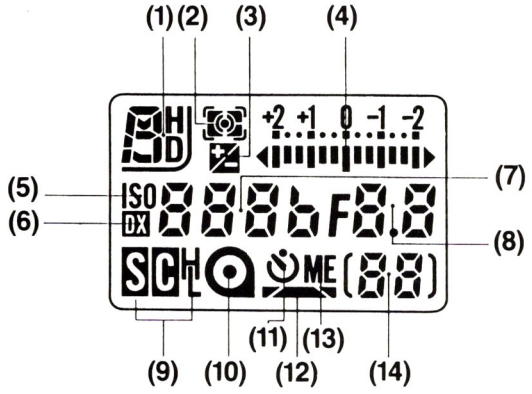

Top Cover LCD Panel

(1)	Exposure mode
(2)	Metering system
(3)	Exposure compensation
(4)	Electronic analog display
(5)	Film speed setting
(6)	DX-coded film speed setting
(7)	Shutter speeds/film speeds
(8)	Aperture/exposure compensation value
(9)	Film advance mode
(10)	Film installation
(11)	Self-timer
(12)	Film advance and rewind
(13)	Multiple exposure
(14)	Frame counter/self-timer duration/ number of multiple exposure

Nikon N8008s

Nikon Advanced Systems Dealer

Product number:	1765
Type of camera:	Integral-motor autofocus 35mm single-lens reflex (SLR)
Picture format:	24mm x 36mm (standard 35mm film format)
Lens mount:	Nikon F mount
Lenses:	AF Nikkor lenses, Nikon lenses with Nikon F mount
Focus modes:	Continuous or single autofocus, and manual focus with electronic range finder
Autofocus detection:	TTL phase detection system using Nikon Advanced AM200 autofocus module
AF detection range:	Approx. EV minus 1 to EV 19 (at ISO 100)
AF actuation method:	Single servo and continuous servo
Autofocus lock:	By lightly pressing shutter release button in Single Servo AF mode or by using AF lock button
Electronic range finder:	Available in manual focus mode with an AF Nikkor or other AI-type Nikkor lenses with a maximum aperture of f/5.6 or faster
Exposure metering:	Matrix, Center-Weighted and Spot metering built-in
Exposure meter switch:	Activated by lightly pressing shutter release button; stays on for approx. 8 sec. after finger is lifted off button
Metering range:	EV 0 to EV 21 (at ISO 100 with f/1.4 lens) for Matrix and Center-Weighed metering; EV 4 to EV 21 (at ISO 100) for Spot metering
Exposure control:	Programmed auto (PD, P, PH), Shutter-priority auto (S), Aperture-priority auto (A) and Manual (M)
Programmed auto exposure control:	Both shutter speed and aperture are set automatically; flexible program in one EV step possible
Shutter-priority auto exposure control:	Aperture automatically selected to match manually set shutter speed
Aperture-priority auto exposure control:	Shutter speed automatically selected to match manually set aperture
Manual exposure control:	Both aperature and shutter speeds are set manually
Shutter:	Electromagnetically controlled vertical-travel focal-plane shutter
Shutter release:	Electromagnetic shutter by motor trigger
Shutter control:	Lithium niobate oscillator-controlled speeds from 1/8000 to 30 sec.; electromagnetically controlled long exposure at B setting
Viewfinder:	Fixed eyelevel pentaprism high-eyepoint type; approx. 0.75x magnification with 50mm lens set at infinity; approx. 92% frame coverage
Eyepoint:	Approx. 19mm
Eyepiece cover:	Model DK-8 prevents stray light from entering viewfinder
Focusing screen:	Nikon advanced B-type BriteView interchangeable screen (E- and J-type available)
Viewfinder display:	The following LCD indications appear; focus indicator, exposure mode, shutter speed, ISO film speed, aperture, exposure compensation value, electronic analog display, exposure compensation mark; ready-light LED; viewfinder LCD is illuminated automatically or by pressing viewfinder illumination button
Electronic beeper:	With power switch at ‡, beeper sounds in the following cases—*operating signals:* () at end of film roll; (2) when film rewinding is complete; (3) during self-timer operation; *alert signals:* (1) for over- or under-exposure and possible picture blur in P and A modes; (2) when non-DX-coded film, damaged film or film with an unacceptable DX-code is loaded; (3) when camera detects abnormality such as torn or damaged film during film advance
Auto exposure lock:	Available by sliding the AE lock lever while the meter is on
Film speed range:	ISO 25 to 5000 for DX-coded film; ISO 6 to 6400 for manual setting

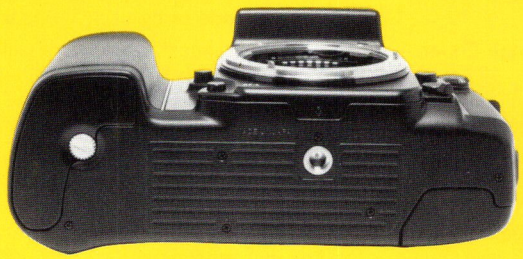

Nikon N8008s

Film speed setting:	At DX position, automatically set to ISO speed of DX-coded film used; with non-DX-coded film; ISO speed is set manually
Film loading:	Film automatically advances to first frame when shutter release button is depressed once
Film advance:*	In S (Single-frame) shooting mode, film automatically advances one frame when shutter is released; in CH (Continuous High) or CL (Continuous Low) shooting mode, shots are taken as long as shutter release button is depressed; in CH mode, shooting speed is approx. 3.3 frames per second (fps), and in CL, approx. 2.0 fps (in Continuous Servo Autofocus or Manual focus mode, and a shutter speed faster than 1/125 sec.)
Frame counter:	Additive type; counts back while film is rewinding
Film rewind:	Automatic when film rewind button is pressed; approx. 10 sec. per 24-exposure roll; stops automatically when film is rewound; temporary film rewind possible during multiple-exposure operation.
Multiple exposure:	Up to 9 exposures can be set
Self-timer:	Electronically controlled; timer duration can be selected between 2 and 30 sec. in one sec. increments; blinking LED indicates self-timer operation; two-shot self-timer possible; setting cancellable
Exposure compensation:	Possible using exposure compensation button within ±5 EV range in 1/3 EV steps
Depth-of-field preview:	Provides visual verification of depth-of-field in A or M mode
Flash hot shoe:	Standard ISO-type hot-shoe contact; ready-light contact, TTL flash contact, monitor contact
Flash synchronization:	1/60 to 1/250 sec. in PD, P, PH or A mode; in S or M mode, shutter fires at speed set, and when set from 1/250 to 1/8000 sec., shutter is automatically set to 1/250 sec.; down to 30 sec. shutter speed is available by using SB-24 in rear-curtain sync
Flash ready-light:	Viewfinder LED lights up when Nikon dedicated speedlight is ready to fire; blinks to warn of poor camera/speedlight connection or of insufficient light
Power source:	Four AA-type batteries
Dimensions (WxHxD):	6.0 x 4.0 x 2.6 in.
Weight (body only):	Approx. 24.5 oz. (695g)

* With fresh alkaline batteries at normal temperature (68°F)

N6006

N6000

N5005

N4004s

N2000®

FM2

Nikon
CONSUMER
PRODUCTS
DEALER

ACCESSORY COMPATIBILITY

SPEEDLIGHTS

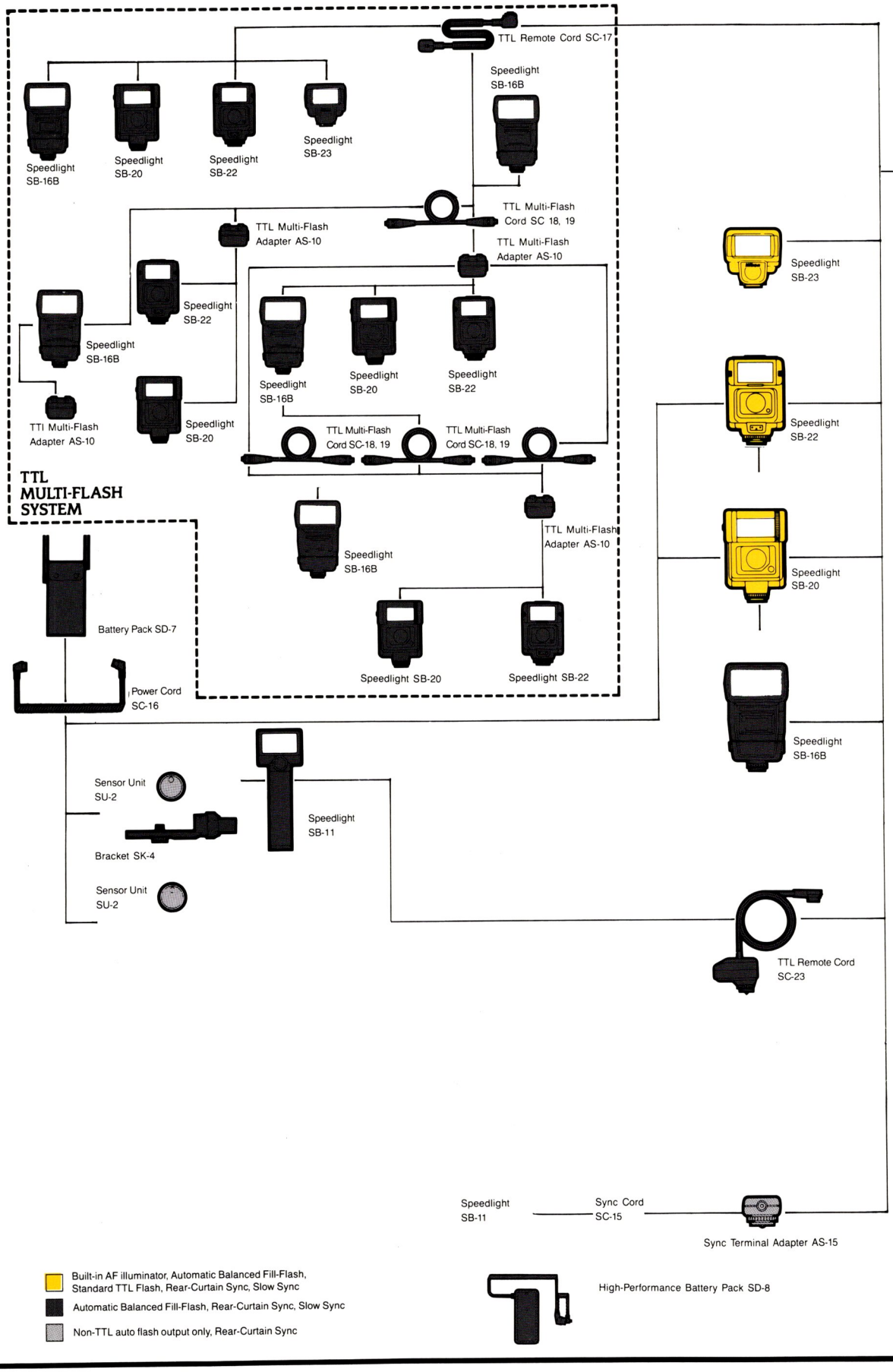

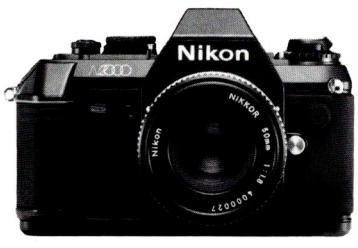

FINDER ACCESSORIES

Eyepiece Correction Lenses (-5, -4, -3, -2, 0, +0.5, +1, +2, +3)

Eyepiece Adapter

Eyepiece Magnifier DG-2

CLOSE-UP ACCESSORIES

AF Micro 60mm f/2.8

AF Micro 105mm f/2.8

55mm f/2.8 Micro-Nikkor

Auto Extension Ring PK-13

105mm f/2.8 Micro-Nikkor

Auto Extension Ring PN-11

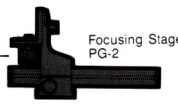

Focusing Stage PG-2

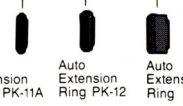

Auto Extension Ring PK-11A

Auto Extension Ring PK-12

Auto Extension Ring PK-13

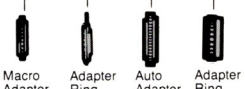

Macro Adapter Ring BR-2A

Adapter Ring BR-6

Auto Adapter Ring BR-5

Adapter Ring BR-3

Close-up Attachment Lenses No. 0, 1, 2, 3T, 4T, 5T, 6T

Matrix Metering

Center-Weighted Metering, AI Control

Stop-Down Metering

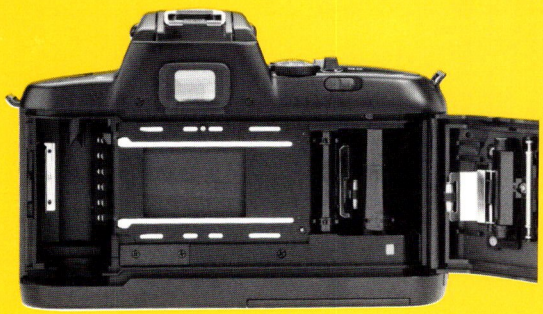

Nikon N5005

Nikon CONSUMER PRODUCTS DEALER

Product number:	1780
Type of camera:	Integral-motor autofocus 35mm single-lens reflex with built-in TTL flash
Picture format:	24mm x 36mm (standard 35mm film format)
Lens mount:	Nikon bayonet mount
Lens:	AF Nikkor lenses (except AF-Nikkor 80mm f/2.8, ED 200mm f/3.5 IF, and autofocus converter TC-16/TC-16A), and non-AF Nikkor lenses (with limitation) available
Focus modes:	Autofocus, and manual focus with focusing confirmation
Autofocus detection system:	TTL phase detection system using Nikon Advanced AM200 sensor
Autofocus detection range:	Approx. EV –1 to EV 19 (at ISO 100)
Autofocus actuation method:	Single servo
Autofocus Lock:	Possible
Focus tracking:	Automatically activated with a moving subject
Focusing confirmation:	Available in manual focus mode with an AF Nikkor, mountable Nikkor and Series E lens with a maximum aperture of f/5.6 or faster
Exposure metering:	Matrix Metering (for ensuring correct automatic operation in programmed, shutter-priority and aperture-priority auto exposure modes); Center-Weighted Metering (for manual exposure mode or when using the AEL button in auto exposure mode)
Exposure meter switch:	Activated by lightly pressing shutter release button; stays on for approx. 8 sec. after lifting finger from button
Metering range:	EV 0 to EV 19 at ISO 100 with f/1.4 lens
Exposure modes:	Programmed auto, shutter-priority auto, aperture-priority auto and manual exposure modes
Programmed auto-exposure control:	Nikon Auto Multi-program; both shutter speed and aperture are set automatically
Shutter-priority auto-exposure control:	Aperture automatically selected to match manually set shutter speed
Aperture-priority auto-exposure control:	Shutter speed automatically selected to match manually set aperture
Manually exposure control:	Both aperture and shutter speed are set manually
Shutter:	Electronically controlled vertical-travel focal-plane shutter
Shutter release:	Electromagnetic
Shutter speeds:	1/2000 to 30 sec. on programmed and aperture-priority auto exposure modes; 1/2000 to 1 sec. on shutter-priority auto and manual exposure modes; T setting for long-time exposure provided
Viewfinder:	Fixed eye-level pentaprism type; 0.8x magnification with 50mm lens set at infinity; 92% frame coverage
Eyepiece cover:	Model DK-5 prevents stray light from entering viewfinder
Focusing screen:	Nikon BriteView screen with central focus brackets for autofocus operation
Viewfinder information:	Green focus indicator LED for focusing, red exposure indicator LED shows over- and underexposure warning, and correct exposure; red flash ready-light for flash photography
Auto exposure lock:	Available via pressing the AEL button while the meter is on (Center-Weighted Metering selected when the AEL button is pressed)
Film speed range:	ISO 25 to 5000 for DX-coded film
Film speed setting:	Automatically set by DX-coded film (ISO 100 is automatically set for all non-DX-coded films)
Film loading:	Film automatically advances to frame one when shutter release button is depressed once; film advance indicator rotates to show that film is loaded and being advanced properly

Nikon N5005

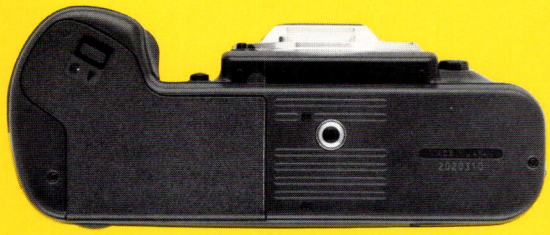

Film advance:	Film automatically advances one frame at approx. 0.4 sec. when shutter is released; film advance stops automatically at end of film roll
Frame counter:	Accumulative type; automatically reset when camera back is opened
Film rewind:	Automatically rewound by built-in motor
Self-timer:	Electronically controlled; approx. 10 sec. exposure delay; blinking LED indicates self-timer operation; two-shot self-timer is possible; cancellable
Reflex mirror:	Automatic, instant-return type
Camera back:	Hinged back; film cartridge confirmation window and film advance indicator
Accessory shoe:	Standard ISO-type with hot-shoe contact, ready-light contact, TTL flash contact, monitor contact
Built-in TTL flash:	Guide number: 12 (meters) or 39 (feet) at IS 100 and 20°C; angle of coverage: 28mm lens or longer; Matrix Balanced Fill-Flash is possible in auto expsoure modes; Center-Weighted Fill-Flash is possible in manual exposure mode
Flash synchronization:	In programmed auto or aperture-priority auto, shutter operates 1/125 to 1/60 sec. (or 1/[focal length] sec. with lens focal length less than 60mm); in shutter-priority auto or manual exposure mode, automatically set to 1/125 sec. when shutter is manually set at 1/125 sec. or faster; if shutter is manually set at 1/125 sec. or slower, shutter fires as set
Flash indication:	Flash ready-light blinks when flash is recommended (scene darker than EV 10 at ISO 100, or a scene with brightness of EV 10 or higher at ISO 100 where the center portion is darker than other areas by more than EV 2) and lights up when built-in TTL flash or accessory Nikon Speedlight is ready to fire
Autofocus flash photography:	Possible only with Nikon Autofocus Speedlight SB-24, SB-23, SB-22 and SB-20
Power source:	Four AA-type batteries
Dimensions (WxHxD):	154 x 102 x 65mm (6.1 x 4.0 x 2.6 in.)
Weight (body only):	Approx. 647 g. (22.8 oz.)

With fresh alkaline batteries at normal temperature (20°C [68°F]).
Specifications and design are subject to change without notice.

Nikon N6006

Nikon CONSUMER PRODUCTS DEALER

Product number:	1770
Type of camera:	Integral-motor autofocus 35mm single-lens reflex
Picture format:	24mm x 36mm (standard 35mm film format)
Lens mount:	Nikon F mount
Lens:	Nikkor lenses having CPU contacts, AI-S-type Nikkor lenses*, AI-Nikkor lenses* and AI-modified Nikkor lenses* **With limitation.*
Focus modes:	Autofocus, and manual focus with electronic range-finder
Autofocus mode:	Focus-Priority Single autofocus and Focus-Priority Continuous autofocus
Autofocus detection system:	TTL phase detection system using Nikon advanced AM200 autofocus module
Autofocus detection range:	Approx. EV minus 1 to EV 19 (ISO 100)
Autofocus lock:	Possible once a subject is in focus in Focus-Priority Single autofocus; in Focus-Priority Continuous autofocus, focus can be locked by using AE-L/AF-L lever when AF-L function is set
Electronic Rangefinder:	Available in manual focus mode with an AF Nikkor and other AI-type Nikkor lenses with a maximum aperture of f/5.6 or faster
Exposure metering:	Three types of exposure metering systems — Matrix Metering, Center-Weighted Metering and Spot Metering
Metering range:	EV 0 to EV 19 (at ISO 100 with f/1.4 lens) for Matrix and Center-Weighted Metering; EV 4 to EV 19 (at ISO 100) for Spot Metering
Exposure meter:	Activated by lightly pressing shutter release button; stays on for approx. 8 sec. after lifting finger from button
Exposure modes:	Programmed auto (P_M, P), Shutter-Priority auto (S), Aperture-Priority auto (A) and Manual (M) modes
Programmed auto exposure control:	Both shutter speed and aperture are set automatically; Flexible Program in one EV step increments possible
Shutter-Priority auto exposure control:	Aperture automatically selected to match manually set shutter speed
Aperture-Priority auto exposure control:	Shutter speed automatically selected to match manually selected aperture
Manual exposure control:	Both aperture and shutter speed are set manually
Exposure compensation:	Possible using exposure compensation button within ±5 EV range in ⅓ EV steps
Auto exposure lock:	Available by sliding the AE lock lever while the meter is on
Auto exposure bracketing:	3 or 5 frames can be taken of the same subject using a variety of exposures (with compensation degree of 0.3, 0.7 or 1 EV between each frame)
Shutter:	Electromagnetically controlled vertical-travel focal-plane shutter
Shutter release:	Electromagnetic type
Shutter speeds:	Lithium niobate oscillator-controlled speeds from 1/2000 to 30 sec.; stepless in Programmed auto and Aperture-Priority auto exposure modes; one EV steps in Shutter-Priority auto and Manual exposure modes; Electromagnetically controlled long exposure at B setting
Viewfinder:	Fixed eyelevel pentaprism high-eyepoint type; 0.75X magnification with 50mm lens at infinity; 92% frame coverage
Eyepoint:	Approx. 18mm
Eyepiece cover:	Model DK-5 (provided) prevents stray light from entering viewfinder
Focusing screen:	Fixed Nikon advanced B-type BriteView screen with central focus brackets for autofocus operation
Film speed range:	ISO 25 to ISO 5000 for DX-coded film; ISO 6 to ISO 6400 for manual setting
Film speed setting:	Auto for DX-coded films and manual setting available

Self-timer:	Electronically controlled; timer duration can be selected between 2 and 30 sec. in one sec. increments; blinking LED indicates self-timer operation; two-shot self-timer is possible; can cancel at any time
Reflex mirror:	Automatic, instant-return type
Flash sync control:	Normal sync, slow sync and rear-curtain sync provided.
Built-in TTL flash:	Guide number: 43 (at ISO 100, 20°C, ft); angle of coverage: 28mm lens or longer; TTL auto flash including automatic balanced Fill-Flash is possible
Flash synchronization:	In Programmed auto or Aperture-Priority auto shutter operates 1/125 to 1/60 sec. (or 1/[focal length] in use at lens focal length less than 60mm) in normal sync or 1/125 to 30 sec. in slow sync; in Shutter-Priority auto or Manual exposure mode, shutter fires at speed set, and when set from 1/250 to 1/2000 sec., shutter is automatically set to 1/125 sec.
Automatic balanced fill-flash:	Possible with built-in TTL flash or Nikon dedicated Speedlights such as SB-24, SB-23, SB-22, SB-20, SB-18, and SB-16B
Manual flash light output compensation:	Can be controlled from +1EV to –3EV in ⅓ step increments
Flash ready-light:	Without flash: Blinks when using flash is recommended (with scene brightness darker than EV10 at ISO 100 or scene brightness of EV10 or higher at ISO 100 where the center portion is darker than other areas by more than 1EV); With flash: Lights up when built-in TTL flash or Nikon dedicated Speedlight is ready to fire or blinks to warn of insufficient light for correct exposure
Accessory shoe:	Standard ISO-type hot-shoe contact; ready light contact, TTL flash contact, monitor contact
Film loading:	Film automatically advances to first frame when shutter release button is depressed once
Film advance:	In S (Single-frame) shooting mode, film automatically advances one frame when shutter is released; In C_H (Continuous High) or C_L (Continuous Low) shooting mode, shots are taken as long as shutter release button is depressed; in C_H mode, shooting speed is approx. 2.0fps, and in C_L, approx. 1.2fps
Number of 36-exposure film rolls per fresh battery*:	Without flash, at 20°C (68°F), Approx. 75 With 50% flash, at 20°C (68°F), Approx 16 Without flash, at –10°C (14°F), Approx. 22 With 50% flash, at –10°C (14°F), Approx. 3

** For autofocus operation with AF Zoom-Nikkor 35-70mm f/3.3-f/4.5 lens covering the full range from infinity (∞) to the closest distance and back to infinity (∞) before each shot, at 1/125 sec. or faster shutter speed.*

Frame counter:	Additive type; counts back while film is rewinding
Frame rewind:	Automatically rewinds by sliding film rewind lever while pressing film rewind button; approx. 26 sec. per 36-exp. roll or 19 sec. per 24-exp. film roll; stops automatically when film is rewound
Camera back:	Hinged back; unchangeable
Power source:	6V lithium battery pack (Duracell DL-223A/Panasonic CR-P2 or equivalent)
Checking battery power:	Battery power is sufficient if shutter speed and aperture indications appear on the LCD panel and viewfinder by turning camera on or by lightly pressing shutter release button, and remain on for approx. 8 sec. after finger is removed from the button; battery power is insufficient if these indications turn off immediately after finger is removed from the button; if LCD blinks and shutter does not operate, batteries are exhausted or improperly loaded
Dimensions (WxHxD):	154.5 x 100 x 66.5mm or 6.1 x 4.0 x 2.6 in.
Weight:	Approx 650g or 23.0 oz. (without battery pack)

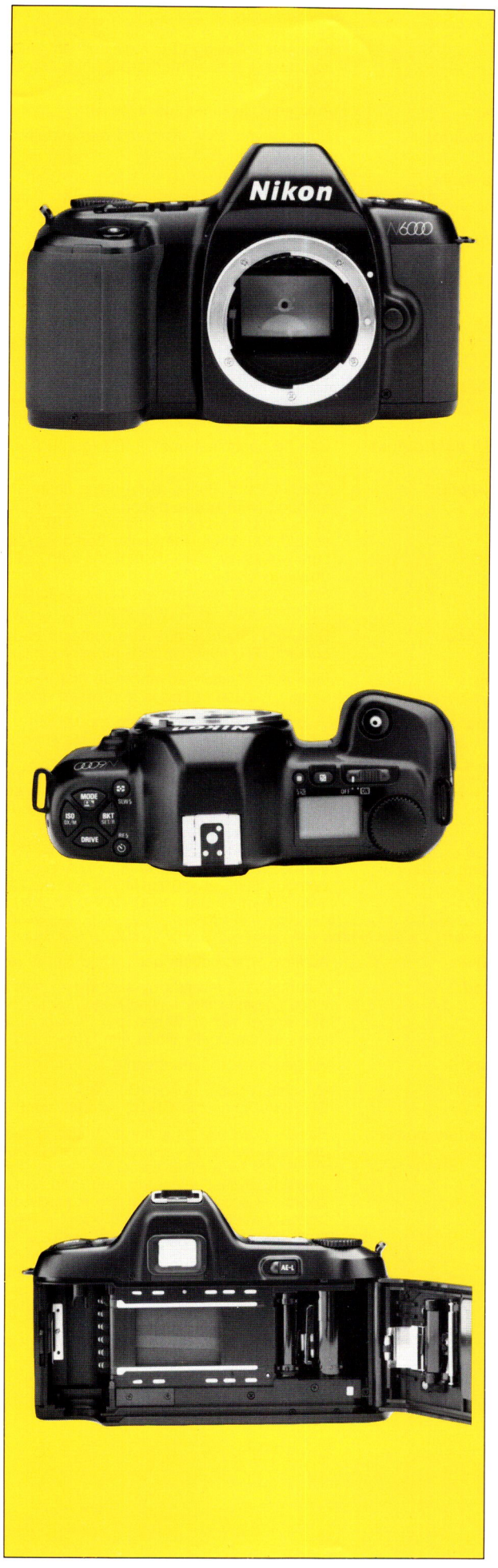

Nikon N6000

Nikon CONSUMER PRODUCTS DEALER

Product number:	1775
Type of camera:	Integral-motor 35mm single-lens reflex
Picture format:	24mm x 36mm (standard 35mm film format)
Lens mount:	Nikon F mount
Lens:	Nikkor lenses having CPU contacts, AI-S-type Nikkor lenses*, AI-Nikkor lenses* and AI-modified Nikkor lenses* **With limitation*
Exposure metering:	Two types of exposure metering sytems—Matrix Metering and Center-Weighted Metering
Metering range:	EV 0 to EV 19 at ISO 100 with f/1.4 lens
Exposure meter:	Activated by powering the camera on or by lightly pressing shutter release button; stays on for approx. 16 sec. after lifting finger from button
Exposure modes:	Programmed auto (P_M, P), Shutter-Priority auto (S) Aperture-Priority auto (A) and Manual (M) modes
Programmed auto exposure control:	Both shutter speed and aperture are set automatically; Flexible Program in one EV step increments possible
Shutter-Priority auto exposure control:	Aperture automatically selected to match manually set shutter speed
Aperture-Priority auto exposure control:	Shutter speed automatically selected to match manually selected aperture
Manual exposure control:	Both aperture and shutter speed are set manually
Exposure compensation:	Possible using exposure compensation button within ±5 EV range in ⅓ EV steps
Auto exposure lock:	Available by sliding the AE lock lever while the meter is on
Auto exposure bracketing:	3 or 5 frames can be taken of the same subject using a variety of exposures (with compensation degree of 0.3, 0.7 or 1 EV between each frame)
Shutter:	Electromagnetically controlled vertical-travel focal-plane shutter
Shutter release:	Electromagnetic type
Shutter speeds:	Lithium niobate oscillator-controlled speeds from 1/2000 to 30 sec.; stepless in Programmed auto and Aperture-Priority auto exposure modes; one EV steps in Shutter-Priority auto and Manual exposure modes; Electromagnetically controlled long exposure at B setting
Viewfinder:	Fixed eyelevel pentaprism high-eyepoint type; 0.75X magnification with 50mm lens at infinity; 92% frame coverage
Eyepoint:	Approx. 18mm
Eyepiece cover:	Model DK-5 (provided) prevents stray light from entering viewfinder
Focusing screen:	Fixed Nikon Type K screen with central split-image rangefinder circle, microprism collar and matte/Fresnel outer field; 12mm-dia. reference circle denotes Center-Weighted Metering area
Film speed range:	ISO 25 to ISO 5000 for DX-coded film; ISO 6 to ISO 6400 for manual setting
Film speed setting:	Auto for DX-coded films and manual setting available
Self-timer:	Electronically controlled; timer duration can be selected between 2 to 30 sec. in one sec. increments; blinking LED indicates self-timer operation; two-shot self-timer is possible; can cancel at any time
Reflex mirror:	Automatic, instant-return type
Flash sync control:	Normal sync, slow sync and rear-curtain sync provided
Flash synchronization:	In Programmed auto or Aperture-Priority auto shutter operates 1/125 to 1/60 sec. (or 1/[focal length] in use at lens focal length less than 60mm) in normal sync or 1/125 to 30 sec. in slow sync; in Shutter-Priority auto or Manual exposure mode, shutter fires at speed set, and when set from 1/250 to 1/2000 sec., shutter is automatically set to 1/125 sec.
Automatic balanced flash:	Possible with Nikon-dedicated Speedlights such as SB-24, SB-23, SB-22, SB-20, SB-18 and SB-16B

Manual flash light output compensation:	Can be controlled from +1EV to –3EV in ⅓ step increments
Flash ready-light:	Viewfinder LED lights up when Nikon-dedicated Speedlight is ready to fire; blinks to alert poor camera/speedlight connection or insufficient light for correct exposure
Accessory shoe:	Standard ISO-type hot-shoe contact; ready-light contact, TTL flash contact, monitor contact
Film loading:	Film automatically advances to first frame when shutter release button is depressed once
Film advance:	In S (Single-frame) shooting mode, film automatically advances one frame when shutter is released; in C_H (Continuous High) or C_L (Continuous Low) shooting mode, shots are taken as long as shutter release button is depressed; in C_H mode, shooting speed is approx. 2.0fps, and in C_L, approx. 1.2fps
Number of film rolls per fresh battery*:	With 36-exposure film rolls at 20°C (68°F) - Approx. 140 With 24-exposure film rolls at 20°C (68°F) - Approx. 210 With 36-exposure film rolls at –10°C (14°F) - Approx. 80 With 24-exposure film rolls at –10°C (14°F) - Approx. 120 **At 1/125 sec. or faster shutter speed*
Frame counter:	Additive type; counts back while film is rewinding
Film rewind:	Automatically rewinds by sliding film rewind lever while while pressing film rewind button; approx. 25 sec. per 36-exp. roll or 17 sec. per 24-exposure film roll; stops automatically when film is rewound
Camera back:	Hinged back; unchangeable
Power source:	6V lithium battery pack (Duracell DL-223A/Panasonic CR-P2 or equivalent)
Checking battery power:	Battery power is sufficient if shutter speed and aperature indications appear on the LCD panel and viewfinder by turning camera on or by lightly pressing shutter release button, and remain on for approx. 16 sec. after finger is removed from the button; battery power is insufficient if these indications turn off immediately after finger is removed from the button; if LCD blinks and shutter does not operate, batteries are exhausted or improperly loaded
Dimensions (WxHxD):	154.5 x 96 x 65mm or 6.1 x 3.8 x 2.6 in.
Weight:	Approx. 565g or 19.9 oz. (without battery pack)

Nikon N4004s

Nikon CONSUMER PRODUCTS DEALER

Product number:	1755
Type of camera:	Electronically-controlled, autofocus single-lens-reflex camera with built-in motor drive and TTL flash unit
Picture format:	24mm x 36mm (standard 35mm format)
Lens mount:	Nikon F bayonet with autofocus contacts
Lenses:	More than 15 AF Nikkor lenses for all operation modes; more than 50 non autofocus Nikkor and Series E lenses (with limitation) usable
Focus modes:	"A" mode for autofocus priority with shutter release possible after the green focusing LED lights up; "M" mode for manual focusing
Autofocus detection:	TTL phase detection system using Nikon advanced AM200 autofocus module; system equipped with 200-segment CCD sensor unit
AF detection range:	EV minus 1 to EV 17 (ISO 100)
Autofocus lock:	Via shutter release button
Exposure metering:	TTL full aperture exposure measurement via segmented silicon photo-diode (SPD)
Exposure control:	Multi-sensor metering provided in all auto control modes for automatic exposure correction under difficult lighting conditions; exposure modes selected via shutter and aperture dials at top of camera; in automatic dual-program exposure mode, shutter speed and aperture are set automatically taking into account the focal length of the lens; in shutter-priority mode, aperture is set automatically for pre-selected shutter speed; in aperture-priority mode, shutter speed is set automatically for pre-selected aperature; in manual mode, aperture and shutter speed are set manually and metering is via center-weighted method
Exposure memory:	Via front-mounted AE-lock control; center-weig exposure measurement provided
Film speed setting:	ISO 25-5000 automatic setting via DX-coded films
Metering range:	EV 1 to EV 19 (ISO 100 and f/1.4 lens)
Shutter:	Electromagnetically controlled, vertical-travel focal-plane-shutter
Shutter control:	Stepless, automatic settings between 1 sec. and 1/2000 sec. In program and aperture-priority automatic exposure control; 12 fixed shutter speed settings of from 1 sec to 1/2000 sec. via Lithium-Niobate oscillator for shutter-priority automatic and manual exposure operation
Film advance:	Automatic loading check system; film automatically advanced to frame "1" after shutter release is depressed once; film advance indicator provided on camera back
Frame counter:	Additive-type with automatic reset to "S" when the camera back is opened
Film rewind:	Motorized, automatic after depressing rewind button
Self-timer:	Electronically-controlled, 10 sec. shutter release delay; visual display via LED at front of camera
Viewfinder:	Fixed pentaprism viewfinder with approximately 92% finder coverage provided
Viewfinder information:	Green LED provides information on focusing via steady illumination when subject is correctly focused; red LEDs of "+," "0," "-" provide information on exposure (over, correct, under), as well as red "thunderbolt" mark for flash ready-light
Focusing screen:	Nikon new BriteView focusing screen; field features matte fresnel area with central reference circle and focusing brackets
Flash hot shoe:	Standard ISO-type shoe with supplemental contacts for operation with Nikon-dedicated TTL speedlights
Built-in TTL flash:	GN 12 (ISO 100 film and Meters) with angle of coverage sufficient for use with lenses to 35mm focal length; TTL automatic flash control via built-in sensor; operation integrated with standard triple-sensor metering to enable proper exposure control even under difficult lighting conditions

Flash synchronization: 1/100 sec. for automatic modes; 1/100 sec. or slower speeds (including B setting) with manual operation

Flash ready-light: Flash "thunderbolt" LED visible as soon as the Nikon Speedlight is ready; blinks to indicate when flash is required or when light output of flash is inadequate for correct exposure

AF-assist flash photography: Possible with optional Nikon Speedlights SB-20, SB-22 and SB-23.

Power source: Four 1.5V AA-type (penlight) batteries via battery chamber at base of camera

Dimensions (HxWxD): 154 x 102 x 65.5mm (6.0″ x 4.0″ x 2.6″)

Weight: Approx. 650g (22.9 oz.), body only, without batteries

Optional accessories: Neck Straps AN-1/4B/4Y/6W/6Y
Body Cap BF-1A
Speedlights SB-20/22/23/24

Nikon N4004s Viewfinder Information

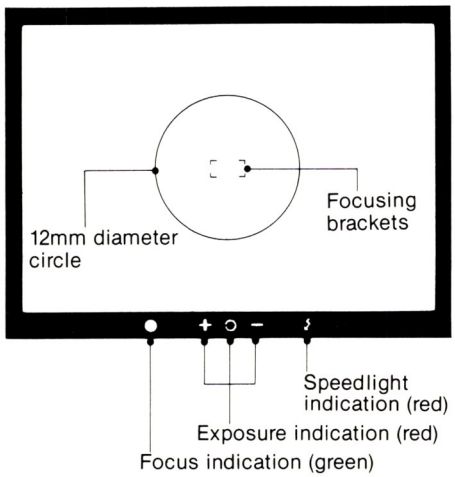

Exposure mode		Program auto	Shutter-priority auto	Aperture-priority auto	Manual
Focus indicator LED	● lights up	In focus			
	● blinks	Autofocus impossible			
	● disappears	Rear/front focus (shutter does not lock in manual focusing)			
Exposure indicator LEDs	○ lights up	Correct exposure			
	○ blinks	Camera shake warning	–	Camera shake warning	–
	+ lights up	Too bright for auto exposure			Under (~ –1EV)
	– lights up	Too dark for auto exposure			Under (~ –1EV)
	+– blink alternately	Lens aperture not set to minimum			
	+○ light up	–			Over (+1 ~ +1/3EV)
	○– light up	–			Under (–1/3 ~ –1EV)
Ready-light LED	ϟ blinks (before shooting)	Flash recommended (when built-in flash or external speedlight is OFF)			
		Beyond acceptable film speed range for TTL photography (over ISO 400)			
		SB-19 is set to B or B (EM)		SB-19 is set to B or B (EM)	
	ϟ disappears	Recharging (shutter does not lock with external speedlight)			
	ϟ lights up	Recharged			
		External speedlight not set to TTL		External speedlight not set to TTL	
	ϟ blinks (after shot)	Insufficient light for correct exposure			

☐ Shutter is locked

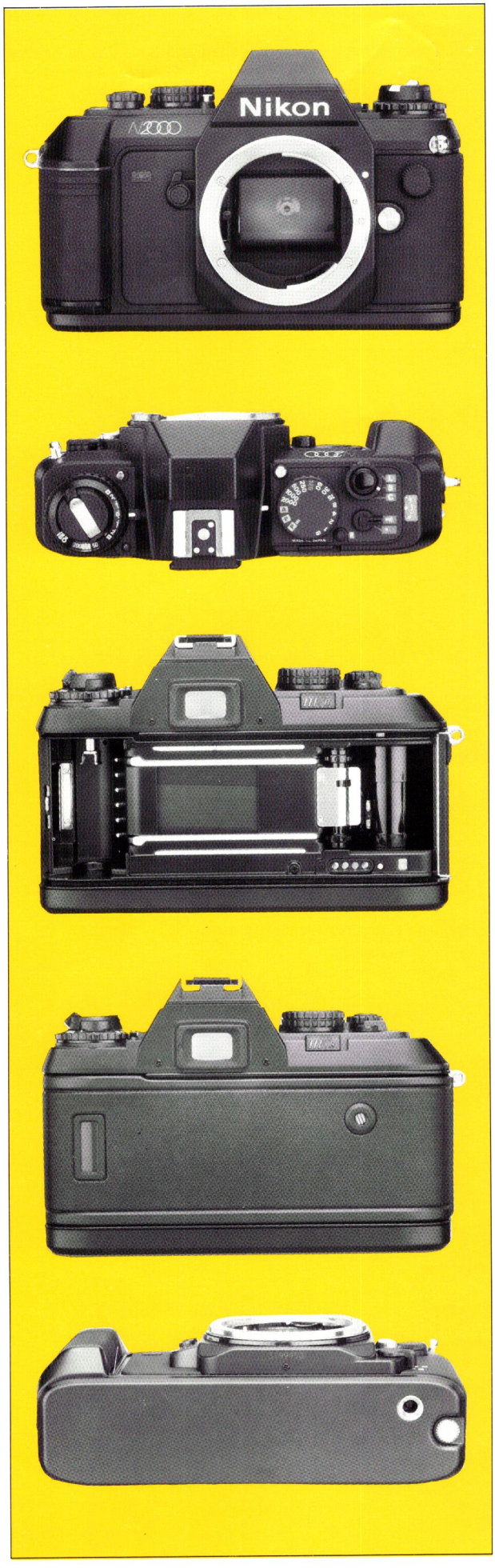

Nikon N2000

Nikon CONSUMER PRODUCTS DEALER

Product number:	1720
Type of camera:	Electronically-controlled, single-lens-reflex camera with built-in motor drive
Picture format:	24mm x 36mm (standard 35mm format)
Lens mount:	Nikon F bayonet
Lenses:	More than 70 Nikkor and Nikon Series E lenses
Viewfinder:	Fixed pentaprism viewfinder with approximately 92% frame coverage
Viewfinder information:	Via LEDs; shutter speed, warning of overexposure or underexposure and recycling of flash provided
Focusing screen:	Fixed Type K2 BriteView focusing screen with central non-shading split-image rangefinder circle, microprism collar and matte/Fresnel outer field; 12mm diameter reference circle denotes centerweighted metering area
Exposure metering:	Thru-the-lens (TTL), center-weighted, full-aperture exposure measurement via silicon photodiode (SPD)
Exposure control:	Standard program, shutter speed and aperture are set automatically; high-speed program, shutter speed and aperture are set automatically, particularly suitable for longer focal lengths; aperture-priority mode, shutter speed is set automatically for preselected aperture; manual mode, aperture and shutter speed are set manually
Metering range:	EV1 to EV19 (f/1.4 at 1 sec. to f/16 at 1/2000 sec.) with 50mm f/1.4 lens and ISO 100 film
Exposure memory:	Via front-mounted exposure-lock
Exposure compensation:	+2EV to -2EV in one-third EV increments via selector dial
Film speed setting:	Automatically for DX-coded films (ISO 25-4000); manually for films without DX code (ISO 12-3200)
Shutter:	Electronically-controlled, vertical-travel, focal plane shutter
Shutter speeds:	Stepless, automatic speed setting between 1 sec and 1/2000 sec on P, P_{HI}, and A; 12 stepped, electronically-controlled fixed speeds from 1 sec. to 1/2000 sec, plus B (Bulb) in manual mode
Film advance:	Automatic loading check system; with simultaneous film advance to frame 1; Mode of operation, single-frame mode (S), Continuous-frame mode with 2.5 frames/sec. (C) and Locked mode (L)
Frame counter:	Additive-type; automatically resets to S when the camera back is opened
Film rewind:	With rewind crank after rewind button is depressed
Audible warning alarm:	Sounds in the following cases: DX setting but no DX-coded film; DX contact dirty; over- or under-exposure and possible picture blur in autoexposure modes; and at end of film roll
Self-timer:	Electronically-controlled, 10 sec. delay; audible and visual indication
Accessory shoe:	Standard ISO hot shoe with additional contacts for TTL metering and flash ready light for use with N2000-dedicated speedlights

Flash synchronization: 1/125 sec in auto modes; 1/125 sec and all slower speeds, including B, in manual mode

Flash ready-light: Flash symbol visible as soon as the N2000-dedicated Speedlight is ready; blinks when light intensity is insufficient

Power source: Four 1.5V AAA-type (penlight) batteries; with optional Battery Holder MB-3, four 1.5V AA-type batteries can be used

Camera back: Interchangeable with Multi-Data Back MF-19

Dimensions (WxHxD): 148.5 x 97.5 x 54.5mm (5.8″ x 3.8″ x 2.0″)

Weight: Approximately 570g (20.0 oz.), body only

Optional accessories: Body Cap BF-1A
Battery Holder MB-3 (for AA-type batteries)
Multi-Data Back MF-19
Remote Trigger Cord MC-12A
Tripod Adapter AH-3
Speedlights SB-15/16B/18/20/21B/22

Nikon N2000 Viewfinder Display

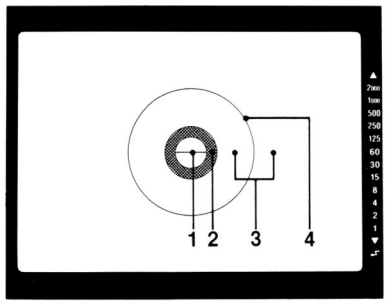

1. **Split-image rangefinder**
2. **Microprism color**
3. **Matte field**
4. **12mm-dia. central area**
   Correct exposure is assured when main subject is placed in this area.

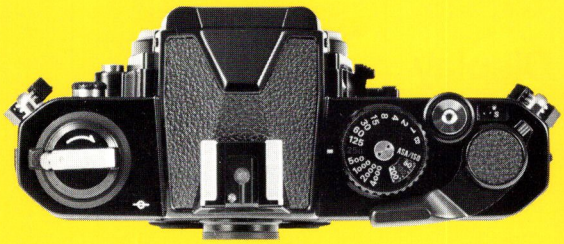

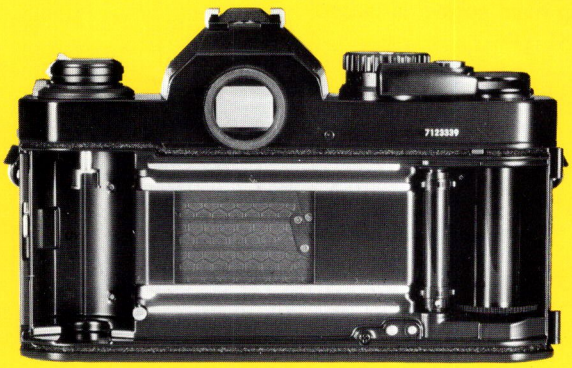

Nikon FM2

Nikon CONSUMER PRODUCTS DEALER

Product number:	1683 (chrome) 1684 (black)
Type of camera:	Mechanically-controlled, single-lens-reflex camera
Picture format:	24mm x 36mm (standard 35mm format)
Lens mount:	Nikon F bayonet
Lenses:	More than 70 Nikkor and Nikon Series E lenses in all
Shutter:	Mechanically-controlled, vertical-travel, metal focal plane shutter
Shutter release:	Mechanical shutter release with ISO screw socket for cable release AR-3; shutter release button locked when film advance lever is flush with camera body
Shutter speeds:	Mechanically governed speeds of 1 sec. to 1/4000 sec., plus B (Bulb)
Film advance lever:	Single-stroke type; 30° stand-off angle and 135° winding angle
Self-timer:	Mechanical type; 10 sec. exposure delay
Viewfinder:	Fixed pentaprism viewfinder with approx. 93% frame coverage
Viewfinder display:	Shutter speed, f-number in use via aperture-direct-readout scale on lens and 3 LEDs (+, 0, -) for exposure setting in 5 steps
Focusing screen:	Standard Type K2 with split-image rangefinder spot and microprism ring; full matte screen B2 and full matte screen with grid E2 as optional accessories
Mirror:	Rapid-return mirror with special control and braking to reduce vibrations and operating noise; depth-of-field preview lever provided at front of camera
Motor drive coupling:	Electrical contact and mechanical coupling for optional MD-12 Motor Drive
Multiple exposure lever:	Provided; couples with frame counter to stop count when multi-exposure being executed
Frame counter:	Additive-type, with automatic resetting to S when the camera back is opened
Film rewind:	Via film rewind crank after rewind button is depressed
Accessory shoe:	Standard ISO-type; contact for ready light provided
Flash sync:	X synchronization up to 1/250 sec.; ISO-type hot shoe contact; separate PC-type flash connector with screw thread for connection to flash units mounted off-camera
Flash ready-light:	LED in viewfinder lights up when Nikon FM2-dedicated speedlight is fully charged
Exposure metering system:	Thru-the-Lens (TTL), center-weighted full aperture metering with two silicon photodiodes (SPD)

Metering range: EV1 to EV18 (1 sec. at f/1.4 to 1/4000 sec. at f/8) with 50mm f/1.4 lens and ISO 100 film

Film speed range: ISO 12 to 6400

Power source: One 3V lithium battery or two 1.5V silver-oxide (button-cell) batteries

Exposure meter switch: Pressing the shutter release button switches meter on; meter is automatically switched off about 30 seconds after the shutter release button is released

Battery power check: LED in viewfinder lights up to indicate sufficient power when the shutter release button is pressed

Camera back: Pops open when the film rewind knob is pulled up; can be removed to insert MF-16 Data Back; memo holder provided

Dimensions (WxHxD): 142.5 x 90 x 60mm (5.6″ x 3.5″ x 2.4″)

Weight: Approx. 540g (19 oz.), body only

Optional Accessories: Focusing Screen Type B2/E2
Motor Drive MD-12
Data Back MF-16
Body Cap BF-1A
Speedlights SB-15/16B/18/20/21B/22

Nikon FM2 Viewfinder Display

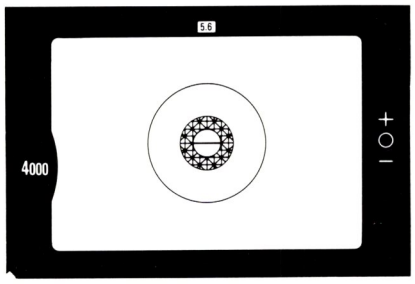

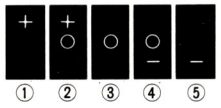

Exposure information
❶ Overexposed by more than 1 stop
❷ Overexposed by 1/5 to 1 stop
❸ Correct exposure
❹ Underexposed by 1/5 to 1 stop
❺ Underexposed by more than 1 stop

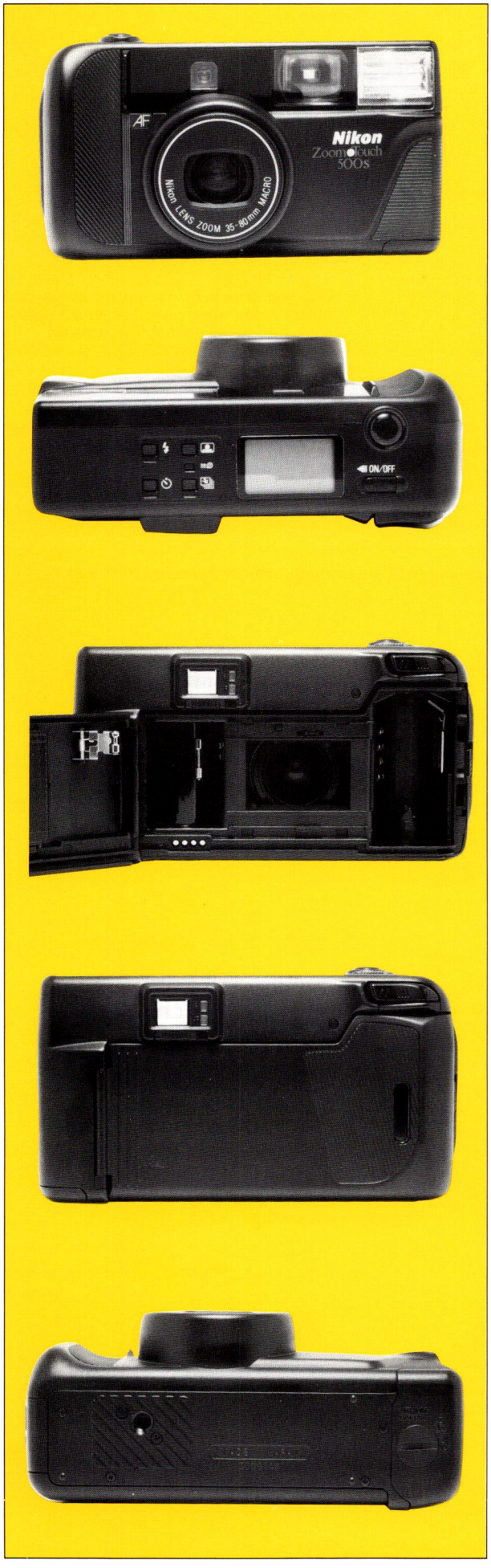

Nikon Zoom-Touch 500s

Product number:	1824
Type of camera:	35mm compact camera with Nikon zoom 35mm-80mm lens; features include autofocus, auto exposure, auto flash, auto flash exposure, auto shutter lock, auto film loading, auto film speed setting, auto film advance, auto film rewind, auto film rewind stop and auto ready lens cover.
Picture format:	24mm x 36mm (standard 35mm format)
Lens:	35mm f/3.5-80mm f/7.8, 9 elements in 7 groups
Lens cover:	Opens or closes automatically with power switch
Shooting distance:	0.71m (approx. 2.3 ft.)-infinity
Film speed setting:	Automatically set to ISO 64, 100, 200, 400, 1000, 1600 with DX-coded film; non DX-coded films are automatically set to ISO 100
Shutter:	Programmed electronic shutter; also serves as diaphragm blades
Viewfinder:	Reverse Galilean Albada-type bright-frame viewfinder: 0.44X-0.9X magnification automatically selected and set by motor; frame coverage is 80% or more
Eyesight adjustment:	–1/+0.5 diopter selectable
Zoom operation:	Single-frame shooting, with or without zoom; continuous shooting without zoom; continuous zoom shooting (automatic consecutive shooting in three steps); step zoom shooting (selectable 5-step zooming); image size selection for full-body, half-body or head and shoulders
Focusing:	Active infrared autofocus system (0.71m [approx. 2.3 ft.]–); lightly pressing shutter release button locks focus
Auto-exposure range:	EV 4 – EV 16 at 35mm setting EV 6.2 – EV 16 at 80mm setting (at ISO 100)
Film loading:	Film automatically advances to first frame when camera back is closed
Film advance:	Automatic, at approx. 0.6 sec.* per frame
Film advance speed in continuous shooting:	Approx. 0.8* frames per sec.
Film rewinding:	Automatic rewinding when end of roll is reached; approx. 17 sec.* per 24-exposure roll; stops automatically when film is rewound; mid-roll rewind button
Frame counter:	Additive type; automatically resets when camera back is opened; counts back while film is rewinding
Self-timer:	Activated by depressing self-timer button and shutter release button; locks focus and exposure; 10-sec. delay with indicator lamp; two-shot self-timer and timer interval control (from 5 to 30 sec.) possible; cancellable
Built-in flash:	Fires at user selection or automatically if existing light is insufficient for normal shooting; ready-light; shutter lock if flash is not charged; recycling time approx. 3 sec.*; flash guide number (ISO 100) of GN41(ft.) or GN12.5(meters) at 35mm setting, to GN46(ft.) or GN14(meters) at 80mm setting
LCD panel:	Film counter; battery power indicator; continuous shooting indicator; flash mode indicator; self-timer indicator; continuous zoom indicator; step zoom indicator; image size indicator; exposure compensation indicator; focal length scale
Battery life:	Approx. 30* rolls of 24-exposure film w/50% flash
Power source:	Lithium battery pack (Duracell DL223A 6V or Panasonic CR-P2 6V)
Dimensions (WxHxD):	Approx. 136.8mm x 73mm x 57.8mm Approx. 5.4 x 2.9 x 2.3 in.
Weight:	Approx. 370g; Approx 13 oz (without battery)

*With fresh battery pack at standard room temperature (20°C [68°F])

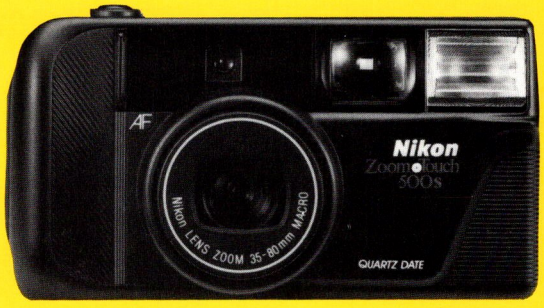

Nikon
CONSUMER
PRODUCTS
DEALER

Nikon Zoom-Touch 500s Quartz Date

Product number:	1825
Type of camera:	Special version of Nikon Zoom-Touch 500s equipped with date back capable of imprinting date or time on film during exposure
Data imprint functions:	Year/Month/Day, Day/Month/Year, Month/Day/Year, Day/Hour/Minute or no imprint, as selected: 24-hr. built-in clock with timing accuracy to within ±90 sec. a month at normal temperatures
Power source:	One lithium (CR2025) battery
Dimensions (WxHxD):	Approx. 136.8 x 73 x 61.3mm Approx. 5.4 x 2.9 x 2.4 in.
Weight:	Approx 380g; Approx. 13.4 oz. (without batteries)

*With fresh battery pack at standard room temperature (20°C [68°F])

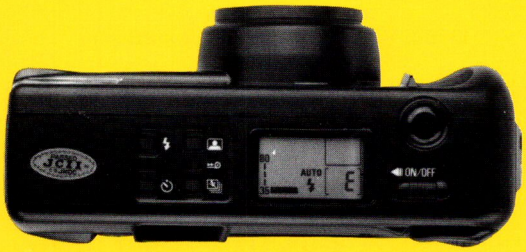

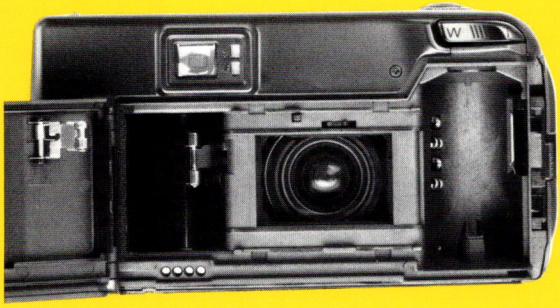

Nikon Zoom-Touch 500

Nikon CONSUMER PRODUCTS DEALER

Product number:	1820
Type of camera:	35mm autofocus, compact camera with Nikon 35-80mm Zoom lens plus Advanced Smart Flash operation
Picture format:	24mm x 36mm (standard 35mm format)
Lens:	Nikon 35-80mm f/3.5-7.8 zoom lens with macro range; 9 elements in 7 groups; cover built into front of lens; cover opens and closes automatically with camera ON/OFF switch
Shutter:	Programmed, electronic in-lens shutter; shutter also serves as lens diaphragm blades
Viewfinder:	Reverse-Galilean, Albada-type viewfinder; 0.44X to 0.9X finder magnification across 35-80mm lens zoom range; approx. 80% frame coverage (infinity focus); -1 diopter
Viewfinder Information:	Picture, autofocus and parallax compensation frame marks via bright-line display; two LEDs provided for "correct focus" (green) and flash "ready-light" (red) indication at viewfinder
Focusing:	Active, infrared autofocus system; range of 2.3 ft. (0.71m) to infinity; focus lock built into camera shutter release button
Auto exposure range:	Programmed automatic exposure control; EV 4 to EV 16 at 35mm setting (ISO 100); EV 6.2 to EV 16 at 80mm setting (ISO 100)
Film speed selection:	Automatically set to ISO 64, 100, 200, 400, 1000, or 1600 via DX-code; automatically set to ISO 100 for cartridges with no DX coding
Film loading:	Automatic motorized film loading with auto advance to first frame when back is closed
Film advance:	Automatic motorized film advance after each frame; up to approx. 1.7 frames per second firing rate in continuous firing mode
Film rewind:	Automatic motorized rewind when end of film is reached; approx. 18 sec. per 24-expsoure roll; auto film stop when end of roll is reached; mid-roll rewind button provided
Film counter:	Additive-type via LDC panel; automatically resets when camera back is opened; counts in reverse as film rewinds
Self timer:	Selected via button and started with shutter release; ten second release delay as standard; delay variable from 5 to 30 sec. in 1 sec. increments; LED indicator flashes count-down; two-shot self timer function provided; focus/exposure lock during timer operation
Built-In electronic flash:	Equipped with Advanced Smart Flash; fires automatically if existing light is insufficient for normal shooting or if subject is backlit; flash ready-light visible at viewfinder; flash zooms with lens focal length changes; auto shutter lock during charging; power rating is approx. GN 41 to 46 (in feet, ISO 100) across the 35mm to 80mm zoom range; flash recycling time approx. 3 sec.

Zoom-Touch 500

LCD Panel

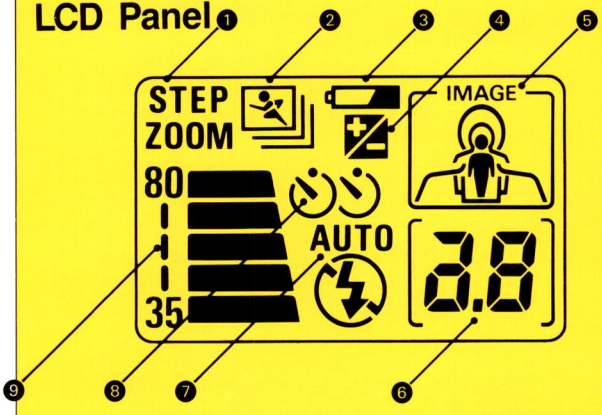

1. Zoom mode indicator
2. Continuous shooting indicator
3. Battery power indicator
4. Exposure compensation indicator
5. Image size indicator
6. Film counter/Exposure compensation value/Self-timer interval
7. Flash indicator
8. Self-timer indicator
9. Focal length scale

LCD panel:	Display provided for film counter, battery power indicator, continuous shooting indicator, flash mode indicator, self-timer indicator, sequence zoom and step zoom shooting indicators, image size indicator, exposure compensation indicator and focal length scale
Power source:	One 6V lithium power pack (DL223A)
Battery performance:	Approx. 30 rolls of 24-exposure film with 50% flash operation
Dimensions (WxHxD):	136.8 x 73 x 57.8mm (5.4 x 2.9 x 2.3 in.)
Weight:	Approx. 360g (12.7 oz.), without battery

Nikon Zoom-Touch 500 Quartz Date

Product number:	1821
Type of camera:	Special version of Nikon Zoom-Touch 500 equipped with date back capable of imprinting date or time on film during exposure
Data imprint functions:	"M/D/Y" (month/day/year) or "Hr./–/Min." (hour/[blank]/minute) via MODE selector, cancellable; imprint via LED
Data back power source:	One 3V lithium battery (provided)
Dimensions (WxHxD):	136.8 x 73 x 61.3mm (5.4 x 2.9 x 2.4 in.)
Weight:	Approx. 370 g (13 oz.), without batteries

Nikon Zoom-Touch 400

Product number:	1822
Type of camera:	35mm compact camera with Nikon Zoom 35mm f/4-70mm f/7.6 lens
Picture format:	24mm x 36mm (standard 35mm format)
Lens:	35mm f/4-70mm f/7.6; 6 elements in 5 groups
Lens cover:	Opens/closes automatically with power switch ON/OFF
Shooting distance:	0.65m (approx. 2.1 ft.)–infinity; 1m (approx. 3.3 ft.)–infinity in Flash-Cancel mode
Film speed setting:	DX-coded film automatically set to ISO 64, 100, 200, 400, 1000 or 1600
Shutter:	Programmed electronic shutter; also serves as diaphragm blades
Viewfinder:	Real-image viewfinder; 0.45X–0.83X magnification automatically selected and set by motor; finder coverage (at approx. 9 ft.) approx. 83%
Focusing:	Three focus modes provided - Carefree Autofocus, Spot Autofocus and Infinity Focus: **Carefree Autofocus** detects camera-to-subject distance by measuring three positions instantaneously via three infrared beams; **Spot Autofocus** detects focus in central focus frames; **Infinity Focus** locks focus at infinity
Focus lock:	Focus is locked as long as shutter release button is lightly pressed in Carefree Autofocus or Spot Autofocus
Zoom control:	Via pressing zoom button; W side for zoom out or T side for zoom in
Auto exposure range:	EV 4–EV 16 at 35mm setting or EV 5.9–EV 16 at 70mm setting (ISO 100)
Controlled aperature:	f/4–f/22 at 35mm setting or f/7.6–f/43.3 at 70mm setting
Film operation:	Fully automatic loading, advance and rewind; film advances by one frame after each shot; mid-roll rewind via button provided; auto rewind at end of film roll; temporary interruption of film rewind possible
Frame counter:	Additive type; counts back during film rewind
Self-timer:	Set by focus mode/self-timer button and activated by depressing shutter release button; one-shot or two-shot operation selectable; cancellable
Built-in flash:	Four modes provided - Auto Flash, Flash-Cancel, Anytime Flash and Auto Flash with red-eye reduction
LCD panel:	Shows frame counter, AF mode indicator, Infinity Focus indicator, flash mode indicator, insufficient battery power indicator
Battery life:	Approx. 30 rolls of 24-exposure film or 20 rolls of 36-exposure film with 50% flash.
Power source:	Lithium battery pack (Duracell DL223A 6V or Panasonic CR-P2 6V)
Dimensions (WxHxD):	Approx. 5.6 x 2.9 x 2.0 in. (143.2 x 73.2 x 52.0mm)
Weight (without battery):	Approx. 12.7 oz. (360g)

Nikon Zoom-Touch 400 Quartz Date

Product number:	1823
Type of camera:	Special version of Nikon Zoom-Touch 400 equipped with date back capable of imprinting date or time on film during exposure
Data imprint functions:	M/D/Y, D/M/Y, Y/M/D, D/H/M, no imprint is selectable; 24-hour built-in clock with timing accuracy within ±90 seconds a month at normal temperatures
Data back power source:	One 3V lithium (CR2025) battery
Dimensions (WxHxD):	Approx. 5.6 x 2.9 x 2.1 in. (143.2 x 73.2 x 54.4mm)
Weight (without battery):	Approx. 13.1 oz. (370g)

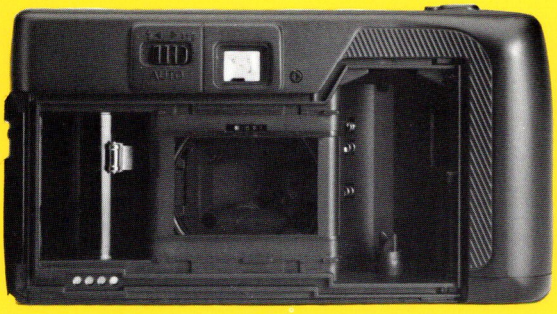

Nikon Tele-Touch 300

Product number:	1812
Type of camera:	35mm autofocus, compact camera with Nikon wide-angle, telephoto and macro function, plus red-eye reduction control
Picture format:	24mm x 36mm (standard 35mm format)
Lens:	Wide: Nikon 35mm f/3.8; 3 elements in 3 groups Tele: Nikon 55mm f/5.7; 5 elements in 5 groups
Lens cover:	Camera equipped with sliding lens cover panel; opening cover turns camera ON, with lens extending to 35mm focal length position; closing panel retracts lens and turns camera OFF
Shutter:	Programmed, electronic in-lens shutter; shutter also serves as lens diaphragm blades
Viewfinder:	Reverse-Galilean, Albada-type viewfinder; 0.4X finder magnification at 35mm lens setting; 0.6X finder magnification at 55m lens setting; approx. 85% frame coverage (infinity focus) at both lens settings; -1 diopter

Tele-Touch 300 Viewfinder Information

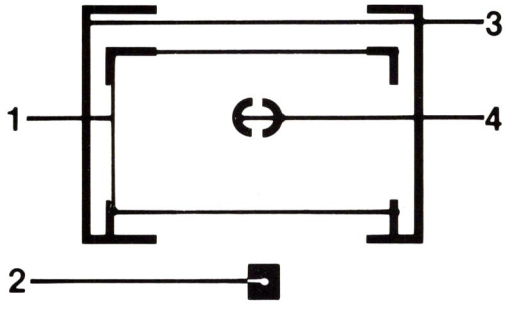

1. Parallax compensation marks
2. Flash ready-light LED
3. Picture frame marks
4. Autofocus frame marks

Viewfinder information:	Picture, autofocus and parallax compensation frame marks via bright-line display; red flash "ready-light" LED indication at viewfinder
Focusing:	Active, infrared autofocus system; range of 1.5 ft. (0.68m) to infinity (1.9 ft., or 0.59m, to infinity at Tele); focus lock built into camera shutter release button
Auto exposure range:	Programmed automatic exposure control; EV 6 to EV 16 at 35mm setting (ISO 100); EV 7.25 to EV 16 at 55mm setting (ISO 100)
Film speed selection:	Automatically set to ISO 100, 200, 400 or 1000 via DX-code; automatically set to ISO 100 for cartridges with no DX coding
Film loading:	Automatic motorized film loading with auto advance to first frame when back is closed
Film advance:	Automatic motorized film advance after each frame; film advance indicator rotates to show film is properly loaded and being advanced
Film rewind:	Automatic motorized rewind when end of film is reached; approx. 18 sec. per 24-exposure roll; auto film stop when end of roll is reached; mid-roll rewind button provided

Film counter:	Additive-type; automatically resets when camera back is opened; counts in reverse as film rewinds
Self timer:	Selected via self-timer button and started with shutter release; ten second release delay with LED indicator flashes count-down; two-shot self timer function provided; focus/exposure lock during timer operation
Electronic flash:	Equipped with Advanced Smart-Flash; fires automatically if existing light is insufficient for normal shooting or if subject is backlit; flash ready-light visible at viewfinder; flash adjusts to lens focal length changes; equipped with Nikon exclusive red-eye reduction system; auto shutter lock during charging; power rating of approx. GN 8.5 (in meters, ISO 100); flash recycling time approx. 3 sec.
Power source:	One 6V lithium power pack (DL223A)
Battery performance:	Approx. 25 rolls of 24-exposure film with 50% flash operation
Dimensions (W x H x D):	136 x 72.6 x 42.8mm (5.4 x 2.9 x 1.7 in.)
Weight:	Approx. 290g (10.2 oz.), without battery

Nikon Tele-Touch 300 Quartz Date

Nikon CONSUMER PRODUCTS DEALER

Product number:	1813
Type of camera:	Special version of Nikon Tele-Touch 300 equipped with data back capable of imprinting date or time on film during exposure
Data imprint functions:	"M/D/Y" (month/day/year) or "Hr./--/Min." (hour/[blank]/minute) via MODE selector, cancellable; imprint via LED
Data back power source:	One 3V lithium battery (provided)
Dimensions (W x H x D):	136 x 72.6 x 47.3mm (5.4 x 2.9 x 1.9 in.)
Weight:	Approx 305g (10.8 oz.), without batteries

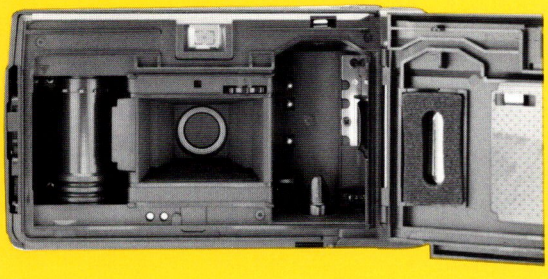

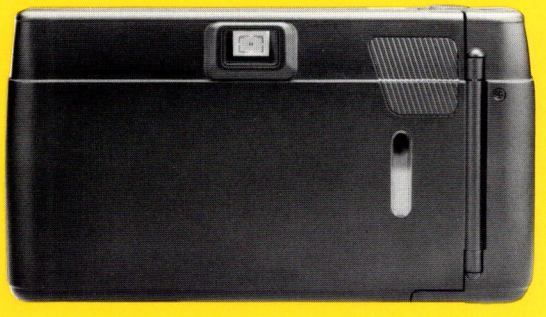

Nikon One-Touch 200

Product number:	1850
Type of camera:	35mm compact camera with autofocus, auto-exposure, auto-flash, auto-flash exposure, auto-shutter lock, auto-film loading, auto-film speed setting, auto-film advance, auto-film rewind, auto-film rewind stop and auto-ready lens cover
Picture format:	24mm x 36mm (standard 35mm format)
Lens:	Nikon lens 35mm f/3.5; three elements in three groups
Lens cover:	Opens by turning on main switch
Film speed setting:	Automatic; ISO 100, 200, 400, 1000 for DX-coded film; all non-DX-coded films are automatically set to ISO 100
Shutter:	Programmed electronic shutter; also serves as diaphragm blade
Viewfinder:	Reverse Galilean Albada-type bright-frame viewfinder; 0.37X magnification; approx. 85% frame coverage (at infinite focus); —0.8 diopter
Viewfinder information:	Picture frame marks, parallax compensation frame marks, autofocus frame marks, flash ready-light LED, flash recycling LED, battery check LED, in-focus LED (red)
Shutter release/ self-timer LED:	Blinks when shutter release button is lightly pressed; lights up when self-timer starts working, blinks 3 sec. before shutter is released
Focusing:	Active autofocus system (0.65m [approx. 2.1 ft.] - ∞); lightly pressing shutter release button locks focus
Focus Memory:	Lightly pressing shutter release button while depressing the focus memory button locks focus for approx. 30 sec.; cancellable
Exposure metering:	Uses CdS sensor; programmed auto-exposure control from EV6.5 to EV16 with ISO 100 film
Film loading:	Closing the camera back automatically advances film to frame #1; film advance indicator rotates to show film is properly loaded and being advanced
Film advance:	Film automatically advances one frame at a speed of approx. 1 frame per sec.* when shutter is released
Film rewinding:	Automatic rewind at the end of the film roll; stops automatically when film is rewound; mid-roll rewind button
Frame counter:	Resets automatically when camera back is opened; counts in reverse as film is rewinding
Self-timer:	Activated by pressing self-timer button; locks focus; 10-second delay with indicator LED; two-shot self-timer possible w/o flash; cancellable
Built-in flash:	Four modes provided—Auto-Flash, Flash Cancel, Anytime Flash and Auto-Flash with red-eye reduction; flash guide number of GN9 (ISO 100 and meters), GN30 (ISO 100 and ft); ready-light; shutter locks if flash is not charged; recycling time approx. 5 sec.
Auto-flash shooting range:	ISO 100 0.65-3.5m (approx. 2.1-11.5 ft.) ISO 200 0.65-5m (approx. 2.1-16.4 ft.) ISO 400, 1000 0.65-7.5m (approx. 2.1-24.6 ft.)
Battery life:	Approx. 24 rolls* of 24-exposure film w/50% flash
Power source:	Two 1.5V AA-type alkaline manganese batteries (LR-6)
Dimensions (W x H x D):	Approx. 124 x 68 x 50mm Approx 4.9 x 2.7 x 2.0 in.
Weight:	Approx. 200g (without batteries) Approx. 7.1 oz (without batteries)

*With fresh batteries at normal room temperature (20°C [68°F]).
Specifications and design are subject to change without notice.

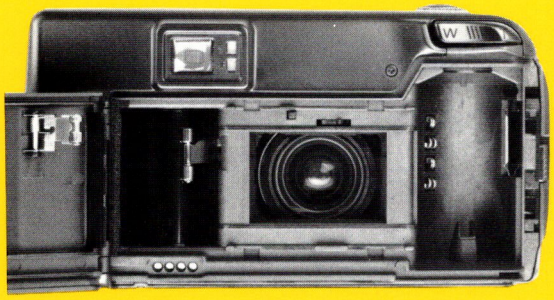

Nikon One-Touch 100

Nikon CONSUMER PRODUCTS DEALER

Product number:	1808
Type of camera:	35mm autofocus, compact camera
Picture format:	24mm x 36mm (standard 35mm format)
Lens:	Nikon 35mm f/3.5; 4 elements in 3 groups; lens cover built into camera body; sliding Open/Close lever also serves as camera ON/OFF switch
Shutter:	Programmed, electronic in-lens shutter; shutter also serves as lens diaphragm blades
Viewfinder:	Reverse-Galilean, Albada-type viewfinder; 0.46 finder magnification approx. 83% frame coverage (infinity focus); -1 diopter
Viewfinder Information:	Picture, autofocus and parallax compensation frame marks via bright-line display; two LEDs provided for "correct focus" (green) and flash "ready-light" (red) indication at viewfinder

One-Touch 100 Viewfinder Information

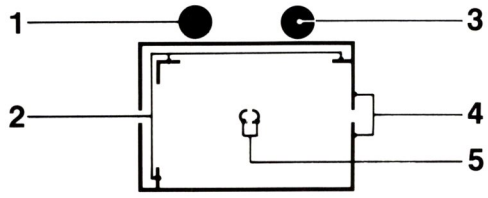

1. **Picture frame marks**
2. **Parallax compensation marks For close-up shooting at a distance of 0.65 to 1m**
3. **Flash ready-light LED (red)**
4. **Autofocus frame marks**
5. **Focus/focus memory indicator LED (green)**

Focusing:	Active, infrared autofocus system; range of 2.1 ft. (0.65m) to infinity; focus lock built into camera shutter release button
Focus memory:	Selected via button in tandem with operation of shutter release; focus setting locked for approx. 30 sec.; operation cancellable
Auto exposure range:	Programmed automatic exposure control via CdS sensor; EV 9 to EV 16 (ISO 100)
Film speed selection:	Automatically set to ISO 64, 100, 200, 400, or 1000 via DX-code; automatically set to ISO 100 for cartridges with no DX coding
Film loading:	Automatic motorized film loading with auto advance to first frame when back is closed and shutter release button is pressed once
Film advance:	Automatic motorized film advance after each frame
Film rewind:	Automatic motorized rewind when end of film is reached; approx. 20 sec. per 24-exposure roll; auto film stop when end of roll is reached; mid-roll rewind button provided
Film counter:	Additive-type; automatically resets when camera back is opened; counts in reverse as film rewinds
Self timer:	Select via button and started with shutter release; ten second release delay as standard; LED indicator flashes count-down; two-shot self timer function provided; focus and exposure locked during timer operation; operation cancellable
Built-In electronic flash:	Flash fires automatically if existing light is insufficient for normal shooting; flash ready-light visible at viewfinder; auto shutter; lock during charging; power rating of approx. GN 30 (in feet, ISO 100); flash operation range of 0.65-3.5m (2.1-11.5 ft.). ISO 100; flash recycling time approx 3.5 sec.
Power source:	Two 1.5V AA-type (penlight) batteries or one 3V lithium power pack (DL123A)
Battery performance:	Approx. 24 rolls of 24-exposure film with 50% flash operation using AA-type batteries or 30 rolls of 24 exposure film with 50% flash operation using lithium power pack
Dimensions (WxHxD):	133 x 71.3 x 48.7mm (5.2 x 2.8 x 1.9 in.)
Weight:	Approx. 250g (8.8 oz.), without batteries
Camera case:	Nikon Soft Camera Case (P/N 690), optional

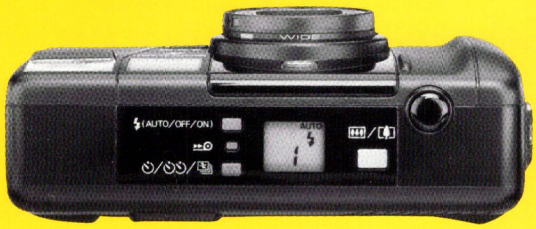

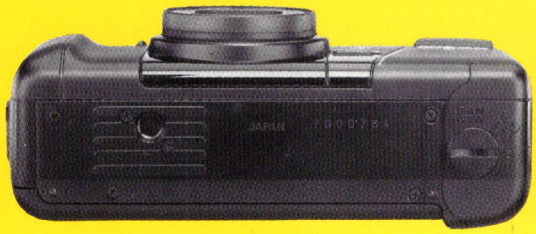

Nikon Tele-Touch Deluxe

Nikon CONSUMER PRODUCTS DEALER

Product number:	1810
Type of camera:	Autofocus compact camera with wide-angle, telephoto and macro function, plus Advanced Smart Flash
Picture format:	24mm x 36mm (standard 35mm format)
Lens:	Wide—Nikon 35mm f/3.5; 4 elements in 3 groups Tele—Nikon 70mm f/6.8; 8 elements in 6 groups
Lens cover:	Opens or closes automatically with the power switch
Filter:	Built-in soft-effect filter; 1 element in 1 group
Shooting distance:	0.69m to infinity (2.3 ft. to infinity)
Film speed setting:	Automatically set to ISO 64, 100, 200, 400, 1000, 1600 for DX-coded film; Non-DX-coded films are automatically set at ISO 100
Shutter:	Programmed electronic shutter; also serves as diaphragm blades
Viewfinder:	Reverse-Galilean Albada-type bright-frame viewfinder; 0.42x (at W) or 0.79x (at T) magnification automatically selected and set by motor; approx. 85% (W) or 86.5% (T) frame coverage; - 1 diopter
Viewfinder information:	Picture frame marks, autofocus frame marks, parallax compensation frame marks, focus indicator LED (green), flash ready-light indicator LED (red)
Focusing:	Active autofocus system; lightly pressing shutter release button locks focus
Exposure metering:	Programmed auto exposure control (ISO 100): EV6 to EV16 on "W" EV7.9 to EV16 on "T"
Film loading:	Film automatically advances to first frame when camera back is closed
Film advance:	Automatic, at 0.7 second per frame in continuous shooting mode
Film rewinding:	Automatic rewinding when end of film roll is reached; approx. 18 sec. per 24-exposure roll; stops automatically when film is rewound; mid-roll rewind button provided
Frame counter:	Additive type; automatically resets when camera back is opened; counts back while film is rewinding
Self timer:	Activated by self-timer/continuous shooting button and by depressing shutter release button; locks focus and exposure; 10-second delay with indicator lamp; two-shot self-timer possible; cancellable
Built-in flash:	Fire automatically if existing light is insufficient for normal shooting; ready-light; shutter locks if flash is not charged; recycling time approx. 1.8 sec.
LCD panel:	Film counter, battery power indicator, continuous shooting indicator, flash mode indicator and self-timer indicator appear on LCD panel

Tele-Touch Deluxe LCD Information Panel

- Essential information displayed on the large, easy-to-read LCD panel are:

(1) Battery status
(2) Picture frame number
(3) Continuous shooting
(4) Advanced Smart Flash mode
(5) Self-timer (one-shot, two-shots)

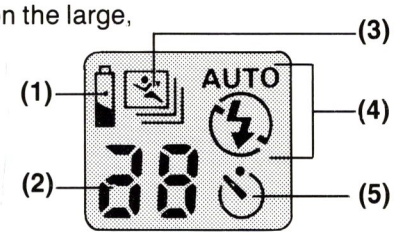

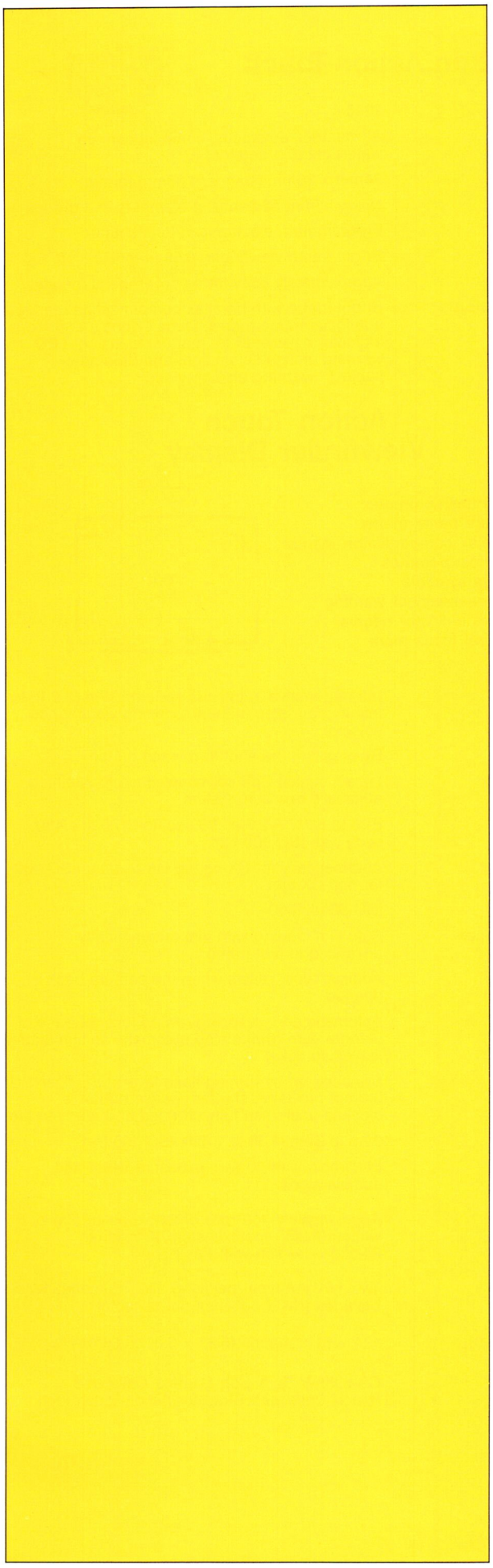

Battery life:	Approx. 25 rolls* of 24-exposure film w/50% flash
Power source:	Lithium battery pack (Duracell DL223A 6V or Panasonic BR-P2)
Dimensions:	136mm x 72mm x 46.6mm (5.4″ x 2.8″ x 1.8″)
Weight:	Approx. 310g (10.9 oz.) without batteries
Camera case:	Pouch Case for Tele-Touch Deluxe/One Touch Fun-Touch (optional)

*With fresh battery pack at normal temperature (68°F/20°C).

Nikon Tele-Touch Deluxe Quartz Date

(Not Pictured)

Product number:	1811
Type of camera:	Special version of Nikon Tele-Touch Deluxe equipped with date back capable of imprinting date or time on film during exposure
Data imprint functions:	"M/D/Y" (month/day/year) or "Hr./–/Min." (hour/[blank] /minute) via MODE selector, cancellable; imprint via LED
Data back power source:	One 3V lithium battery (provided)
Dimensions (WxHxD):	136.8 x 72 x 49.8mm (5.3 x 2.8 x 1.9 in.)
Weight:	Approx. 290 g (10 oz.), without batteries

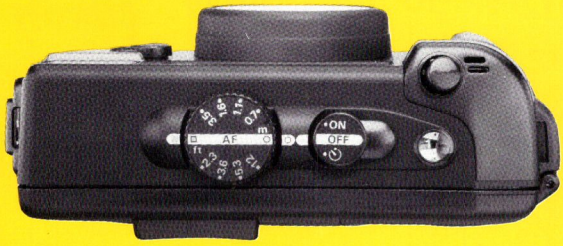

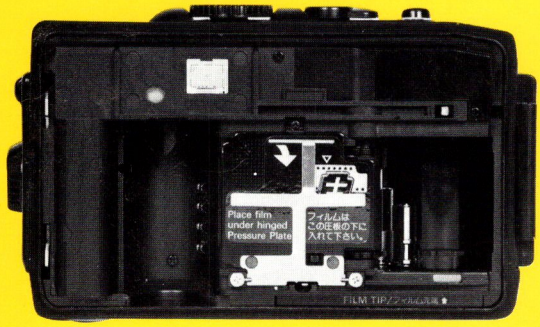

Nikon Action-Touch

Product number:	1840
Type of camera:	All weather, autofocus, compact camera, watertight to a depth of 10 ft.
Picture format:	24mm x 36mm (standard 35mm format)
Lens:	Nikon 35mm f/2.8 lens, 4 elements in 3 groups
Shutter:	Programmed, electronic in-lens shutter
Viewfinder:	Bright-frame viewfinder; 0.5x magnification
Field of view:	Approximately 85% frame coverage at infinity
Viewfinder information:	Bright frame with parallax compensation marks, autofocus frame marks, focus symbols and focus indicator needle; M for manual focusing; LED warning of insufficient light and "too-near-subject" warning also provided

Action Touch Viewfinder Display

1) **Auto flash-prompter**
2) **Picture frame marks**
3) **Parallax compensation marks**
4) **Autofocus frames**
5) **Focus symbols**
6) **Too-near-subject warning**
7) **Focus indicator needle**
8) **Manual focus mark**

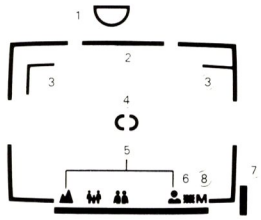

Focusing:	Infrared, active autofocus system; 0.7m (2.2 ft) to infinity; four-step manual focusing via stepped selector
Focus memory:	By pressing the shutter release button
Exposure metering:	Lens-mounted CdS cell coupled to programmed, automatic exposure system
Metering range:	EV6 to EV17 (f/2.8 at 1/8 sec. to f/17.5 at 1/430 sec.) with ISO 100 film
Film speed setting:	Automatically for DX-coded films; set to ISO 100 for non-DX film
Film speed range:	ISO 50 to 1600
Film loading/advance:	Auto film loading with film automatically advanced to first frame
Frame counter:	Additive type; resets when the camera back is opened
Film rewind:	Automatic after pressing rewind lever at base of camera; film rewind stop automatic as film leader leaves sprocket
Electronic flash:	Switched on by turning flash lever; LED flash prompt provided; shutter release button is blocked until flash fully charged and ready to fire
Flash range:	0.7m to 3.6m (2.3ft to 10.8ft), ISO 100 film
Self-timer:	Electronic with 10 sec. exposure delay and audible signal
Battery capacity:	Approximately 100 rolls of 24-exposure film without flash; approximately 10 rolls of 24-exposure film with flash
Power source:	Two 1.5V AA-type (penlight) alkaline-manganese batteries (NiCd batteries not suitable)
Dimensions (WxHxD):	134 x 81 x 48mm (5.2″ x 3.2″ x 1.9″)
Camera cases:	CS-L35AW Semi-Soft Camera Case and Pouch Case with Strap for Action-Touch (optional)

Nikkor Lenses for 35mm SLR Cameras

Nikkor AI Lens Table

Description	Optical Construction	Picture Angle	Minimum f-stop	Closest Focusing Distance	Filter Size	Lens Hood	Lens Case	Weight (grams)	Dimensions (mm)**	TC 16A	TC 14A	TC 14B	TC 201	TC 301
Fisheye (NAS)														
6mm f/2.8 Fisheye Nikkor	12-9	220°	f/22	0.25m (0.9 ft)	5 filters Built-in	—	Trunk Case	5200	236x160 (171)	◎	◎	X	◎	X
8mm f/2.8 Fisheye Nikkor	10-8	180°	f/22	0.3m (1ft)	5-filters Built-in	—	CL-11	1100	123x128 (139)	◎	◎	X	◎	X
16mm f/2.8 Fisheye Nikkor	8-5	180°	f/22	0.3m (1ft)	4 special filters supplied†	Built-in	CL-30S, No. 61	330	63x55.5 (66)	◎	◎	X	◎	X
Wide Angle (NAS)														
13mm f/5.6 Nikkor	16-12	118°	f/22	0.3m (1 ft)	4 special filters supplied†	Built-in	CL-14	1200	115x88.5 (99)	X	◎	X	◎	X
15mm f/3.5 Nikkor	14-11	110°	f/22	0.3m (1ft)	4 special filters supplied†	Built-in	CL-17	630	90x83.5 (94)	X	◎	X	◎	X
18mm f/3.5 Nikkor	11-10	100°	f/22	0.25m (0.9 ft)	72mm	HK-9	CL-37	350	75x61.5 (72.5)	X	○	X	◎	X
20mm f/2.8 Nikkor	12-9	94°	f/22	0.25m (0.9 ft)	62mm	HK-14	CL-30S, No. 61	260	65x42.5 (54)	X	◎	X	◎	X
24mm f/2 Nikkor	11-10	84°	f/22	0.3m (1 ft)	52mm	HK-2	CL-31S, No. 61	300	63x51.5 (63)	◎	◎	X	◎	X
28mm f/2 Nikkor	9-8	74°	f/22	0.25m (0.9 ft)	52mm	HN-1	CL-31S, No. 61	360	63x58.5 (68.5)	◎	◎	X	◎	X
35mm f/1.4 Nikkor	9-7	62°	f/16	0.3m (1 ft)	52mm	HN-3	CL-31S, No. 61	400	67.5x62 (74)	◎	◎	X	◎	X
Wide Angle (NCP)														
24mm f/2.8 Nikkor	9-9	84°	f/22	0.3m (1 ft)	52mm	HN-1	CL-30S, No. 61	250	63x46 (57)	◎	◎	X	◎	X
28mm f/2.8 Nikkor	8-8	74°	f/22	0.2m (0.7 ft)	52mm	HN-2	CL-30S, No. 61	250	63x44.5 (53)	◎	◎	X	◎	X
35mm f/2 Nikkor	8-6	62°	f/22	0.3m (1 ft)	52mm	HN-3	CL-31S, No. 61	280	63x51.5 (59.5)	◎	◎	X	◎	X
Normal (NAS)														
50mm f/1.2 Nikkor	7-6	46°	f/16	0.5m (1.7 ft)	52mm	HS-12, HR-2	CL-34A, No. 61	380	68.5x47.5 (59)	○	○	X	◎	X
Normal (NCP)														
50mm f/1.4 Nikkor	7-6	46°	f/16	0.45 (1.5 ft)	52mm	HS-9, HR-1	CL-34A, No. 61	250	63x40 (50.5)	◎	◎	X	◎	X
Telephoto (NAS)														
85mm f/1.4 Nikkor	7-5	28°-30′	f/16	0.85m (3 ft)	72m	HN-20	CL-34A, No. 62	620	80.5x64.5 (72.5)	◎	◎*	X	◎*	X
105mm f/1.8 Nikkor	5-5	23°-20′	f/22	1m (3 ft)	62mm	Built-in	CL-15S, No. 62	580	78.5x80.5 (88.5)	◎	◎*	X	◎*	X
135mm f/2 Nikkor	6-4	18°	f/22	1.3m (4.5 ft)	72mm	Built-in	CL-15S, No. 62	860	80.5x93.5 (103)	◎	◎*	X	◎*	X
200mm f/2N Nikkor ED-IF	10-8	12°-20′	f/22	2.5m (10 ft)	Gel Holder	Built-in + HE-4	CT-200	2550	132x225.5 (233.5)	○	○	◎*	◎*	X
300mm f/4.5 Nikkor ED-IF	7-6	8°-10′	f/32	2.5m (10 ft)	72mm	Built-in	CL-20A	1060	80x192 (200)	X	X	◎	X	◎
400mm f/2.8 Nikkor ED-IF	8-6	6°-10′	f/22	4m (13 ft)	52mm	Built-in + HE-3	CT-400	5150	163x378.5 (386.5)	X	X	◎	△	◎
400mm f/3.5 Nikkor ED-IF	8-6	6°-10′	f/22	4.5m (13 ft)	122mm/39mm	Built-in	CL-61A, No. 57	2800	134x296 (304)	X	△	◎	X	◎
400mm f/5.6 Nikkor ED-IF	7-6	6°-10′	f/32	4m (13 ft)	72mm	Built-in	CL-27A	1200	85x254 (262)	X	○	◎	○	◎
500mm f/4 Nikkor P ED-IF	8-6	5°	f/22	5m (20 ft)	39mm	HK-7	CT-500	3000	138x384 (393)	X	○	◎	○	◎
600mm f/4N Nikkor ED-IF	8-6	4°-10′	f/22	6.5m (24 ft)	39mm	Built-in + HE-5	CT-601	5650	173x465.5 (473.5)	X	X	◎	X	◎
600mm f/5.6N Nikkor ED-IF	7-6	4°-10′	f/32	5m (20 ft)	39mm	Built-in + HE-4	CL-603	2800	132x387.5 (395.5)	X	X	◎	X	◎
800mm f/5.6 Nikkor ED-IF	8-6	3°	f/32	8m (30 ft)	52mm	Built-in + HE-3	CT-800	5450	163x546 (554)	X	X	◎	X	◎
Telephoto (NCP)														
85mm f/2 Nikkor	5-5	28°-30′	f/22	0.85m (3 ft)	52mm	HS-10	CL-31S, No. 61	310	63x52.5 (60.5)	◎	◎	X	◎	X
105mm f/2.5 Nikkor	5-4	23°-20′	f/22	1m (3.5 ft)	52mm	Built-in	CL-32S, No. 62	435	64x69.5 (77.5)	◎	○	X	◎	X
135mm f/2.8 Nikkor	5-4	18°	f/32	1.3mm (4.5 ft)	52mm	Built-in	CL-32S, No. 62	435	64x83.5 (91.5)	◎	◎	◎	○	X
200mm f/4 Nikkor	5-5	12°-20′	f/32	2m (8 ft)	52mm	Built-in	CL-13A, No. 63	510	65x116 (124)	*	*	*	*	*
300mm f/4.5 Nikkor	6-5	8°-10′	f/32	3.5m (11.5 ft)	72mm	Built-in	CL-20A	1200	78.5x194 (202)	X	X	◎	X	◎
Reflex (NAS)														
1000mm f/11 Nikkor	5-5	2°-30′	—	8m (25 ft)	39mm	Built-in	CL-29	1900	119x233.5 (241)	X	△	□	△	□
Reflex (NCP)														
500mm f/8N Nikkor	6-6	5°	—	1.5m (5.25 ft)	82mm/39mm	HN-27	CL-39	840	89x109 (116)	X	△	□	△	X
Zoom (NAS)														
35-200mm f/3.5-4.5 Zoom-Nikkor	17-13	62°-12°-20′	f/22	1.6m (4 ft)	62mm	HK-15	CL-13A, No. 63	740	70x119 (128)	X	X	X	◎	X
80-200mm f/4 Zoom-Nikkor	13-9	30°-10′-12°-20′	f/32	1.2m (4 ft)	62mm	HN-23	CL-35A, No. 63	810	73x154 (162)	X	○	X	◎	X
50-300mm f/4.5 Zoom-Nikkor ED	15-11	46°-8°-10′	f/32	2.5m (8.5 ft)	95mm	HK-5	CL-64, CE-2	1950	98x239 (247)	X	◎	X	◎	X
180-600mm f/8 Zoom-Nikkor ED	18-11	13°-40′-4°-10′	f/32	2.5m (8.5 ft)	95mm	HN-16	CZ 1860	3600	105x395 (402)	X	X	◎	X	◎

KEY:
- ◎ Fully Compatible
- X Unusable
- ○ Usable
- * When used at smaller apertures than f/11 with high shutter speeds, there is occasional uneven exposure
- □ Usable with filter removed
  Copy to come
- † 4 special filters supplied

Nikkor AI Lens Table

Description	Optical Construction	Picture Angle	Minimum f-stop	Closest Focusing Distance	Filter Size	Lens Hood	Lens Case	Weight (grams)	Dimensions (mm)**	TC 16A	TC 14A	TC 14B	TC 201	TC 301
Zoom (NCP)														
28-85mm f/3.5-4.5 Zoom Nikkor	15-11	74°-28°-30′	f/22	0.8m (3 ft)	62mm	HK-16	CL-33S, No. 62	510	67x89 (97.5)	X	◎	X	◎	X
35-135mm f/3.5-4.5 Zoom Nikkor	15-14	62°-18′	f/22	1.5m (4 ft)	62mm	HN-22	CL-15S, No. 62	600	68x104 (112)	X	◎	X	◎	X
100-300mm f/5.6 Zoom Nikkor	14-10	24° 20′-8° 10′	f/32	2m (8 ft)	62mm	HN-24	CL-40	930	74x199 (207)	X	◎	X	◎	X
Special (NAS)														
28mm f/3.5 PC Nikkor	9-8	74°	f/22	0.3m (1ft)	72mm	HN-9	CL-34A, No. 62	380	78x64.5 (69)	X	X	X	X	X
35mm f/2.8 PC Nikkor	7-7	62°	f/32	0.3m (1ft)	52mm	HN-1	CL-34A, No. 61	320	62x61.5 (66)	X	X	X	X	X
58mm f/1.2 Noct Nikkor	7-6	40°-50′	f/16	0.5m (1.7 ft)	52mm	HS-7, HR-2	CL-34A, No. 61	465	74x51.5 (63)	○	◎*	X	◎*	X
105mm f/4.5 UV Nikkor	6-6	23°-20′	f/32	0.48m (1.57 ft)	52mm	—	CL-15S, No. 63	515	68.5x108 (116.5)	X	X	◎	X	◎
120mm f/4 Medical-Nikkor IF	6-9	18°-50′	f/32	0.35m (1.1 ft)	49mm	—	Leatherette Compartment	890	98x142 (150)	X	X	X	X	X
200mm f/4 Micro-Nikkor	9-6	12°-20′	f/32	0.71m (2.34 ft)	52mm	Built-in	CL-36	800	66x172 (180)	X	△	○	X	○
Special (NCP)														
55mm f/2.8 Micro-Nikkor	6-5	43°	f/32	0.25m (0.9 ft)	52mm	HN-3	CL-31S, No. 61	290	63.5x62 (70)	◎	◎	X	◎	X
105mm f/2.8 Micro-Nikkor	10-9	23°-20′	f/32	0.41m (1.34 ft)	52mm	HS-14	CL-33S, No. 63	515	66.5x83.5 (91.5)	◎	◎	X	◎	X
Teleconverter (NAS)														
TC-14B	5-5	—	—	—	—	—	CL-30S, No. 61	165	65x22 (34)	—	—	—	—	—
TC-301	5-5	—	—	—	—	—	CL-33S, No. 62	280	64.5x83 (115)	—	—	—	—	—
Teleconverter (NCP)														
TC-14A	5-5	—	—	—	—	—	CL-30S, No. 61	145	65x17 (25.5)	—	—	—	—	—
TC-201	7-5	—	—	—	—	—	CL-30S, No. 61	230	64.5x44 (52.5)	—	—	—	—	—

KEY:
◎ Fully Compatible
X Unusable
○ Usable
* When used at smaller apertures than f/11 with high shutter speeds, there is occasional uneven exposure
□ Usable with filter removed
Copy to come
† 4 special filters supplied

AF Nikkor Lens Table

Description	Optical Construc-tion	Picture Angle	Mini-mum f-stop	Closest Focusing Distance	Filter Size	Lens Hood	Lens Case	Weight (grams)	Dimensions (mm)**	TC 16A	TC 14A	TC 14B	TC 201	TC 301
Wide Angle (NAS)														
20mm f/2.8 AF Nikkor	12-9	94°	f/22	0.25m (0.85 ft)	62mm	HB-4	CL-30S, No. 61	260	69x42.5 (52)	O	O	X	O	X
Wide Angle (NCP)														
24mm f/2.8 AF Nikkor	9-9	84°	f/22	0.3m (1 ft)	52mm	HN-1	CL-30S, No. 61	260	65x46 (55.5)	O	O	X	O	X
28mm f/2.8 AF Nikkor	5-5	74°	f/22	0.3m (1 ft)	52mm	HN-2	CL-30S, No. 61	195	65x39 (48.5)	O	O	X	O	X
35mm f/2 AF Nikkor	6-5	62°	f/22	0.25m (0.85 ft)	52mm	HN-3	CL-30S, No. 61	215	63x43.5 (53)	O	O	X	O	X
Normal (NCP)														
50mm f/1.4 AF Nikkor	7-6	46°	f/16	0.45m (1.5 ft)	52mm	HR-2	CL-30S, No. 61	255	65x42 (52.5)	O	O *	X	O *	X
50mm f/1.8 AF Nikkor	6-5	46°	f/22	0.45m (1.5 ft)	52mm	HR-2	CL-30S, No. 61	210	65x39 (48)	O	O	X	O	X
Telephoto (NAS)														
180mm f/2.8N AF Nikkor ED-IF	8-6	13°-40′	f/22	1.5m (5 ft)	72mm	Built-in	CL-38	750	78.5x144 (153)	△	△	X	△	X
300mm f/2.8N AF Nikkor ED-IF	8-6	8°-10′	f/22	3m (10 ft)	39mm	Built-in + HE-6	CT-303, No. 57	2700	133x255 (263)	△	△	O	△	O
300mm f/4 AF Nikkor ED-IF	8-6	8°-10′	f/32	2.5m (9 ft)	82mm/39mm	Built-in	CL-42	1330	89x219 (227)	X	X	O	△	O
Telephoto (NCP)														
85mm f/1.8 AF Nikkor	6-6	28°-30′	f/16	0.85 (3 ft)	62mm	HN-23	CL-15S, No. 62	415	71x58.5 (69)	△	△ *	X	O *	X
Zoom (NAS)														
35-70mm f/2.8 AF Zoom-Nikkor	15-12	62°-34°-20′	f/22	0.6m (2 ft)	62mm	HB-1	CL-33S, No 63	665	71.5x94.5 (105)	O	O	X	O	X
80-200 f/2.8 AF Zoom-Nikkor	16-11	30°-10′-12°-20′	f/22	1.8m (6 ft)	77mm	HN-28	CL-43	1200	85.5x176.5 (184.5)	△	△	O	O	X
Zoom (NCP)														
24-50mm f/3.3-4.5 AF Zoom-Nikkor	9-9	84°-46°	f/22	0.6m (2 ft)	62mm	HB-3	CL-32S, No. 62	375	70.5x73.5 (82.5)	X	O	X	O	X
28-85mm f/3.5-4.5 AF Zoom-Nikkor	15-11	74°-28° 30′	f/22	0.8m (3 ft)	62mm	HB-1	CL-33S, No. 62	540	71x89 (97.5)	X	O *	X	O *	X
35-70mm f/3.3-4.5 AF Zoom-Nikkor	8-7	62°-34° 20′	f/22	0.5m (1.5 ft)	52mm	HN-2	CL-32S, No. 62	260	70.5x61 (69)	X	O	X	O	X
35-105mm f/3.5-4.5 AF Zoom-Nikkor	16-12	62°-23° 20′	f/22	1.4m (4.5 ft)	52mm	HB-2	CL-33S, No. 62	460	69x87 (95.5)	X	O	X	O	X
35-135mm f/3.5-4.5N AF Zoom-Nikkor	15-12	62°-18°	f/22	1.5m (5 ft)	62mm	HB-1	CL-41, No. 62	685	72.5x109 (117)	X	O	X	O	X
70-210mm f/4-5.6 AF Zoom-Nikkor	12-9	34°-20′-11° 50′	f/32	1.5m (5 ft)	62mm	HN-24	CL-15S, No. 63	590	73.5x108 (116)	X	O	X	O	X
Micro (NCP)														
55mm f/2.8 AF Micro-Nikkor	6-5	43°	f/32	0.299m (1 ft)	62mm	—	CL-32S, No. 62	420	74x74 (82)	O	O *	X	O *	X
60mm f/2.8 AF Micro Nikkor	8-7	39°-40′	f/32	0.219m (8.75 in)	62mm	—	CL-32S, No. 62	455	70x74 (82)	O	O	X	O	X
105mm f/2.8 AF Micro-Nikkor	9-8	39°-40′	f/28	0.314m (1.2 ft)	52mm	HS-7	CL-15S	565	75x104.5	O	O	X	O	X
TeleConverter (NCP)														
TC 16A	5-5	—	—	—	—	—	CL-30S, No. 61	150	71x21 (30)	—	—	—	—	

KEY:
** Dimensions are give in mm
Diam x length from mounting flange (overall length)
O Usable
X Not usable
• Usable, but occasional vignetting
* When used at smaller apertures than f/11 with high shutter speeds, there is occasional uneven exposure

Description	Optical Construc-tion	Picture Angle	Mini-mum f-stop	Minimum Normal Focusing Distance	Minimum Macro Focusing Distance	Filter Size	Lens Hood	Lens Case	Weight (grams)	Dimensions (mm)**	TC 16A	TC 14A	TC 14B	TC 201	TC 301
Wide Angle (NAS)															
20mm f/2.8 AF Nikkor	12-9	94°	f/22	0.25m (0.85 ft)	—	62mm	HB-4	CL-30S, No. 61	260	69x42.5 (52)	◎	◎	X	◎	X
Wide Angle (NCP)															
24mm f/2.8 AF Nikkor	9-9	84°	f/22	0.3m (1 ft)	—	52mm	HN-1	CL-30S, No. 61	260	64.5x46 (55.5)	◎	◎	X	◎	X
28mm f/2.8 AF Nikkor	5-5	74°	f/22	0.3m (1 ft)	—	52mm	HN-2	CL-30S, No. 61	195	64.5x39 (48.5)	◎	◎	X	◎	X
35mm f/2 AF Nikkor	6-5	62°	f/22	0.25m (0.85 ft)	—	52mm	HN-3	CL-30S, No. 61	215	63x43.5 (53)	◎	◎	X	◎	X
Normal (NCP)															
50mm f/1.4 AF Nikkor	7-6	46°	f/16	0.45m (1.5 ft)	—	52mm	HR-2	CL-30S, No. 61	255	64.5x42 (52.5)	◎	◎	X	◎	
50mm f/1.8 AF Nikkor	6-5	46°	f/22	0.45m (1.5 ft)	—	52mm	HR-2	CL-30S, No. 61	210	65x39 (48)	◎	◎	X	◎	X
Telephoto (NAS)															
135mm f/2.0 AF DC-Nikkor	7-6	18°	f/16	1.1m (4 ft)	—	72mm	Built-in	CL-39	870	79x120 (128)	X	X	◎	X	X
180mm f/2.8N AF Nikkor ED-IF	8-6	13°-40′	f/22	1.5m (5 ft)	—	72mm	Built-in	CL-38	750	78.5x144 (153)	△	△	X	△	X
300mm f/2.8N AF Nikkor ED-IF	8-6	8°-10′	f/22	3m (10 ft)	—	39mm	Built-in + HE-6	CT-303, No. 57	2700	133x255 (263)	△	△	◎	△	◎
300mm f/4 AF Nikkor ED-IF	8-6	8°-10′	f/32	2.5m (9 ft)	—	82mm/39mm	Built-in	CL-42	1330	89x219 (227)	X	X	◎	△	◎
Telephoto (NCP)															
85mm f/1.8 AF Nikkor	6-6	28°-30′	f/16	0.85 (3 ft)	—	62mm	HN-23	CL-15S, No. 62	415	71x58.5 (69)	△	△	X	◎	X
Zoom (NAS)															
35-70mm f/2.8 AF Zoom-Nikkor	15-12	62°-34° 20′	f/22	0.6m (2 ft)	0.28m (0.9 ft)	62mm	HB-1	CL-33S, No 63	665	71.5x94.5 (105)	◎	◎	X	◎	X
80-200 f/2.8 AF Zoom-Nikkor	16-11	30° 10′-12° 20′	f/22	1.8m (6 ft)	1.5m (4.9 ft)	77mm	HN-28	CL-43	1200	85.5x176.5 (184.5)	△	△	◎	◎	X
Zoom (NCP)															
24-50mm f/3.3-4.5 AF Zoom-Nikkor	9-9	84°-46°	f/22	0.6m (2 ft)	0.5m (1.6 ft)	62mm	HB-3	CL-32S, No. 62	375	70.5x73.5 (82.5)	X	◎	X	◎	X
28-70mm f/3.5-4.5 AF Zoom-Nikkor	8-7	74°-34° 20′	f/22	0.5m (1.5 ft)	0.39m (1.3 ft)	52mm	HB-6	CL-32S, No. 62	350	67.5x71 (79)	X	◎	X	◎	X
28-85mm f/3.5-4.5 AF Zoom-Nikkor	15-11	74°-28° 30′	f/22	0.8m (3 ft)	0.23m (0.8 ft)	62mm	HB-1	CL-33S, No. 62	540	71x89 (97.5)	X	◎	X	◎	X
35-70mm f/3.3-4.5 AF Zoom-Nikkor	8-7	62°-34° 20′	f/22	0.5m (1.5 ft)	0.35m (1 ft)	52mm	HN-2	CL-32S, No. 62	260	70.5x61 (69)	X	◎	X	◎	X
35-105mm f/3.5-4.5 AF Zoom-Nikkor	16-12	62°-23° 20′	f/22	1.4m (4.6 ft)	0.38m (1.3 ft)	52mm	HB-5	CL-33S, No. 62	510	69x87 (95.5)	X	◎	X	◎	X
35-135mm f/3.5-4.5N AF Zoom-Nikkor	15-12	62°-18°	f/22	1.5m (5 ft)	0.3m (1.2 ft)	62mm	HB-1	CL-41, No. 62	685	72.5x109 (117)	X	◎	X	◎	X
70-210mm f/4-5.6 AF Zoom-Nikkor	12-9	34°-20′-11° 50′	f/32	1.5m (5 ft)	1.2m (4 ft)	62mm	HN-24	CL-38, No. 63	590	73.5x108 (116)	X	◎	X	◎	X
75-300mm f/4.5-5.6 AF Zoom-Nikkor	13-11	31° 40′-8° 10′	f/32	3m (10 ft)	1.5m (5 ft)	62mm	HN-24	CL-35A	850	72x166 (174)	X	◎	X	◎	X
Micro (NCP)															
55mm f/2.8 AF Micro-Nikkor	6-5	43°	f/32	0.299m (1 ft)	—	62mm	—	CL-32S, No. 62	420	74x74 (82)	◎	◎	X	◎	X
60mm f/2.8 AF Micro-Nikkor	8-7	39°-40′	f/32	0.219m (8.75 in)		62mm	—	CL-32S, No. 62	455	70x74 (82)	◎	◎	X	◎	X
105mm f/2.8 AF Micro-Nikkor	9-8	39°-40′	f/28			52mm	HS-7	CL-15S	565	75x104.5 (113)	◎	◎	X	◎	X
TeleConverter (NCP)															
TC 16A	5-5	—	—	—	—	—	—	CL-30S, No. 61	150	71x21 (30)	—	—	—	—	

KEY:
** Dimensions are given in mm
Diam x length from mounting flange (overall length)
◎ Usable
X Not usable
△ Usable, but occasional vignetting
* When used at smaller apertures than f/11 with high shutter speeds, there is occasional uneven exposure

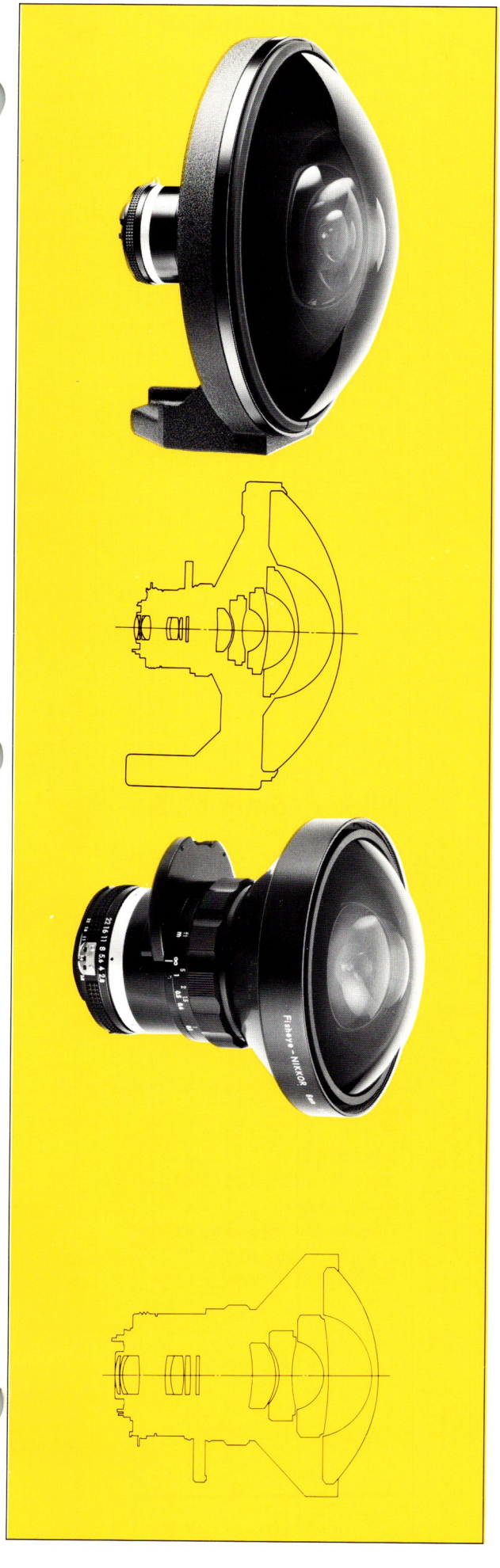

Fisheye-Nikkor 6mm f/2.8

Product number:	1405
Focal length:	6mm
Maximum aperture:	f/2.8
Picture angle:	220°
Optical construction:	12 elements in 9 groups
Projection formula:	Equidistant
Image diameter:	23mm
Minimum focusing distance:	0.25m (0.9 ft.)
Aperture range:	f/2.8–f/22
Lens aperture:	Via automatic diaphragm
Filters:	5 built-in filters (L1B, Y48, Y52, 056 and R60)
Tripod mount:	Via built-in, tripod mounting foot
Lens case:	Supplied
Dimensions:	236mm dia. x 171mm (9.3″ x 6.7″)
Weight:	5200g (183.7 oz.)
Usable teleconverters:	Autofocus Converter TC-16A 1.4x Teleconverter TC-14A 2x Teleconverter TC-201

Fisheye-Nikkor 8mm f/2.8

Product number:	1402
Focal length:	8mm
Maximum aperture:	f/2.8
Picture angle:	180°
Optical construction:	10 elements in 8 groups
Projection formula:	Equidistant
Image diameter:	23mm
Minimum focusing distance:	0.3m (1 ft.)
Aperture range:	f/2.8–f/22
Lens aperture:	Via automatic diaphragm
Filters:	5 built-in filters (L1B, Y48, Y52, 056 and R60)
Lens case:	Supplied (CL-11)
Dimensions:	123mm dia. x 139mm (4.8″ x 5.5″)
Weight:	1100g (38.9 oz.)
Usable teleconverters:	Autofocus Converter TC-16A 1.4x Teleconverter TC-14A 2x Teleconverter TC-201

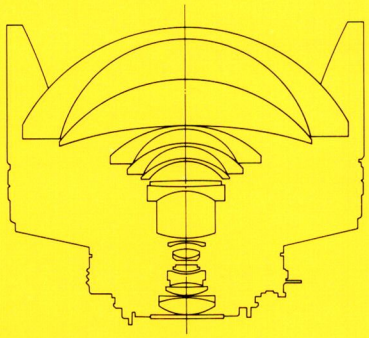

Nikkor 13mm f/5.6

Nikon Advanced Systems Dealer

Product number:	1410
Focal length:	13mm
Maximum aperture:	f/5.6
Picture angle:	118°
Optical construction:	16 elements in 12 groups
Special characteristics:	Close-range correction (CRC) system
Minimum focusing distance:	0.3m (1 ft.)
Aperture range:	f/5.6–f/22
Lens aperture:	Via automatic diaphragm
Filter size:	Bayonet mount; 4 filters (L1B, 056, A2 and B2) supplied
Lens hood:	Built-in
Lens case:	Supplied (CL-14)
Dimensions:	115mm dia. x 101mm (4.5″ x 3.9″)
Weight:	1200g (42.4 oz.)
Optional accessories:	Miscellaneous Bayonet Mount Filters
Usable teleconverters:	1.4x Teleconverter TC-14A 2x Teleconverter TC-201

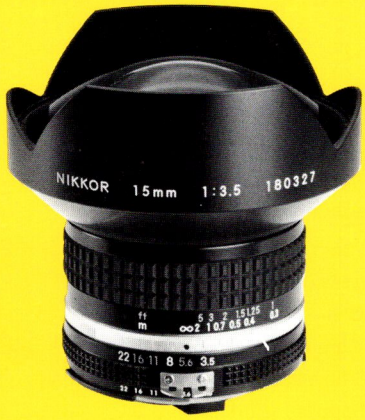

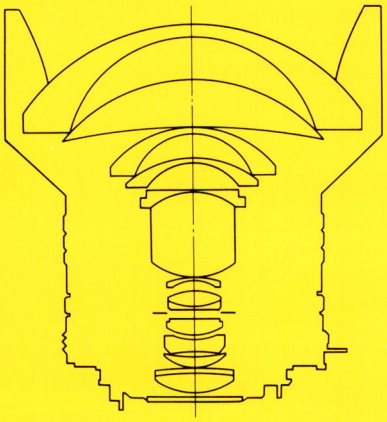

Nikkor 15mm f/3.5

Nikon Advanced Systems Dealer

Product number:	1412
Focal length:	15mm
Maximum aperture:	f/3.5
Picture angle:	110°
Optical construction:	14 elements in 11 groups
Special characteristics:	Close-range correction (CRC) system
Minimum focusing distance:	0.3m (1 ft.)
Aperture range:	f/3.5–f/22
Lens aperture:	Via automatic diaphragm
Filter size:	Bayonet mount; 4 filters (L1B, 056, A2 and B2) supplied
Lens hood:	Built-in
Lens case:	Supplied (CL-17)
Dimensions:	90mm dia. x 94mm (3.5″ x 3.7″)
Weight:	630g (22.3 oz.)
Optional accessories:	Miscellaneous Bayonet Mount Filters
Usable teleconverters:	1.4x Teleconverter TC-14A 2x Teleconverter TC-201

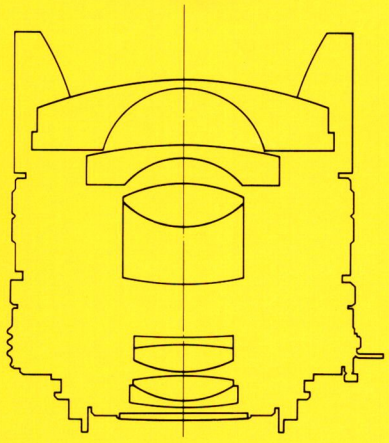

Fisheye-Nikkor 16mm f/2.8

Nikon Advanced Systems Dealer

Product number:	1408
Focal length:	16mm
Maximum aperture:	f/2.8
Picture angle:	180°
Optical construction:	8 elements in 5 groups
Minimum focusing distance:	0.3m (1 ft.)
Aperture range:	f/2.8–f/22
Lens aperture:	Via automatic diaphragm
Filter size:	Bayonet mount; 4 filters supplied (L1B, 056, A2 and B2)
Lens hood:	Built-in
Dimensions:	63mm dia. x 66mm (2.5″ x 2.6″)
Weight:	330g (11.7 oz.)
Optional accessories:	Hard Lens Case CL-30S Soft Leather Lens Pouch #61
Usable teleconverters:	Autofocus Converter TC-16A 1.4x Teleconverter TC-14A 2x Teleconverter TC-201

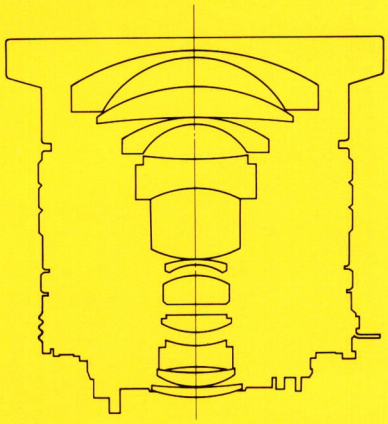

Nikkor 18mm f/3.5

Nikon Advanced Systems Dealer

Product number:	1413
Focal length:	18mm
Maximum aperture:	f/3.5
Picture angle:	100°
Optical construction:	11 elements in 10 groups
Special characteristics:	Close-range correction (CRC) system
Minimum focusing distance:	0.25m (0.85 ft.)
Aperture range:	f/3.5–f/22
Lens aperture:	Via automatic diaphragm
Filter size:	72mm diameter
Lens hood:	Supplied (HK-9)
Lens case:	Supplied (CL-37)
Dimensions:	75mm dia. x 72.5mm (3.0″ x 2.9″)
Weight:	350g (12.4 oz.)
Optional accessories:	Plastic Lens Case CP-8 Miscellaneous 72mm Filters Gelatine Filter Holder AF-2
Usable teleconverters:	1.4x Teleconverter TC-14A 2x Teleconverter TC-201

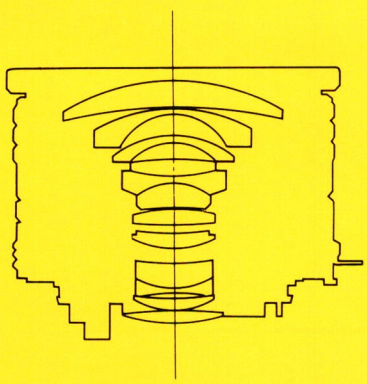

Nikkor 20mm f/2.8

Nikon Advanced Systems Dealer

Product number:	1415
Focal length:	20mm
Maximum aperture:	f/2.8
Picture angle:	94°
Optical construction:	12 elements in 9 groups
Special characteristics:	Close-range correction (CRC) system
Minimum focusing distance:	0.25m (0.85 ft.)
Aperture range:	f/2.8–f/22
Lens aperture:	Via automatic diaphragm
Filter size:	62mm diameter
Dimensions:	65mm dia. x 54mm (2.6″ x 2.1″)
Weight:	260g (9.2 oz.)
Optional accessories:	Lens Hood HK-14 Hard Lens Case CL-30S Soft Leather Lens Pouch #61 Plastic Lens Case CP-8 62-72mm Filter Adapter Ring UR-1 Miscellaneous 62mm Filters Miscellaneous 72mm Filters Gelatine Filter Holder AF-2
Usable teleconverters:	1.4x Teleconverter TC-14A 2x Teleconverter TC-201

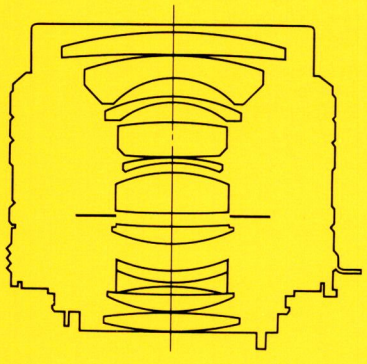

Nikkor 24mm f/2

Product number:	1417
Focal length:	24mm
Maximum aperture:	f/2
Picture angle:	84°
Optical construction:	11 elements in 10 groups
Special characteristics:	Close-range correction (CRC) system
Minimum focusing distance:	0.3m (1 ft.)
Aperture range:	f/2–f/22
Lens aperture:	Via automatic diaphragm
Filter size:	52mm diameter
Dimensions:	63mm dia. x 63mm (2.5″ x 2.5″)
Weight:	300g (10.6 oz.)
Optional accessories:	Lens Hood HK-2 Hard Lens Case CL-31S Soft Leather Lens Pouch #61 Plastic Lens Case CP-8 Miscellaneous 52mm Filters Gelatine Filter Holder AF-1
Usable teleconverters:	Autofocus Converter TC-16A 1.4x Teleconverter TC-14A 2x Teleconverter TC-201

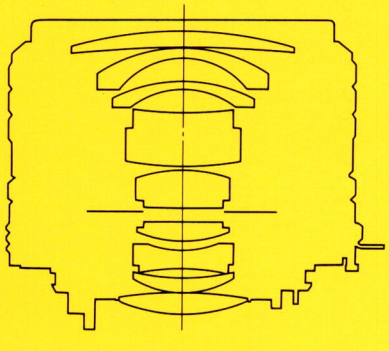

Nikkor 24mm f/2.8

Product number:	1416
Focal length:	24mm
Maximum aperture:	f/2.8
Picture angle:	84°
Optical construction:	9 elements in 9 groups
Special characteristics:	Close-range correction (CRC) system
Minimum focusing distance:	0.3m (1 ft.)
Aperture range:	f/2.8–f/22
Lens aperture:	Via automatic diaphragm
Filter size:	52mm diameter
Dimensions:	63mm dia. x 57mm (2.5″ x 2.2″)
Weight:	250g (8.8 oz.)
Optional accessories:	Lens Hood HN-1 Hard Lens Case CL-30S Soft Leather Lens Pouch #61 Plastic Lens Case CP-8 Miscellaneous 52mm Filters Gelatine Filter Holder AF-1
Usable teleconverters:	Autofocus Converter TC-16A 1.4x Teleconverter TC-14A 2x Teleconverter TC-201

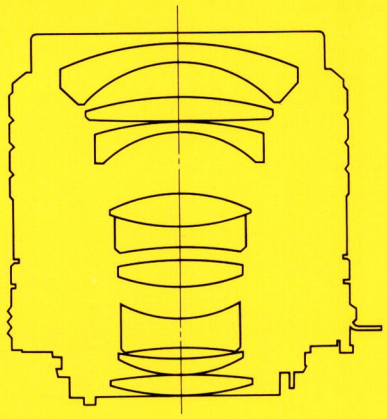

Nikkor 28mm f/2

Nikon Advanced Systems Dealer

Product number:	1419
Focal length:	28mm
Maximum aperture:	f/2
Picture angle:	74°
Optical construction:	9 elements in 8 groups
Special characteristics:	Close-range correction (CRC) system
Minimum focusing distance:	0.25m (0.85 ft.)
Aperture range:	f/2–f/22
Lens aperture:	Via automatic diaphragm
Filter size:	52mm diameter
Dimensions:	63mm dia. x 68.5mm (2.5″ x 2.7″)
Weight:	360g (12.1 oz.)
Optional accessories:	Lens Hood HN-1 Hard Lens Case CL-31S Soft Leather Lens Pouch #62 Plastic Lens Case CP-9 Miscellaneous 52mm Filters Gelatine Filter Holder AF-1
Usable teleconverters:	Autofocus Converter TC-16A 1.4x Teleconverter TC-14A 2x Teleconverter TC-201

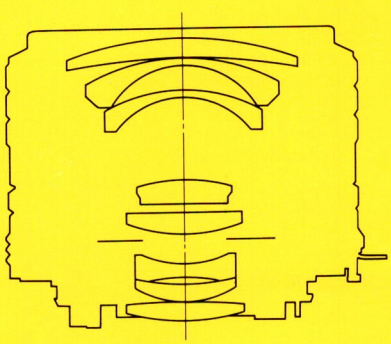

Nikkor 28mm f/2.8

Nikon CONSUMER PRODUCTS DEALER

Product number:	1420
Focal length:	28mm
Maximum aperture:	f/2.8
Picture angle:	74°
Optical construction:	8 elements in 8 groups
Special characteristics:	Close-range correction (CRC) system
Minimum focusing distance:	0.2m (0.7 ft.)
Aperture range:	f/2.8–f/22
Lens aperture:	Via automatic diaphragm
Filter size:	52mm diameter
Dimensions:	63mm dia. x 53mm (2.5″ x 2.1″)
Weight:	250g (8.8 oz.)
Optional accessories:	Lens Hood HN-2 Hard Lens Case CL-30S Soft Leather Lens Pouch #61 Plastic Lens Case CP-8 Miscellaneous 52mm Filters Gelatine Filter Holder AF-1
Usable teleconverters:	Autofocus Converter TC-16A 1.4x Teleconverter TC-14A 2x Teleconverter TC-201

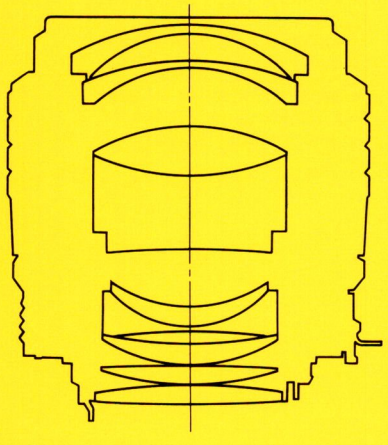

Nikkor 35mm f/1.4

Product number:	1429
Focal length:	35mm
Maximum aperture:	f/1.4
Picture angle:	62°
Optical construction:	9 elements in 7 groups
Special characteristics:	Close-range correction (CRC) system
Minimum focusing distance:	0.3m (1 ft.)
Aperture range:	f/1.4–f/16
Lens aperture:	Via automatic diaphragm
Filter size:	52mm diameter
Dimensions:	67.5mm dia. x 74mm (2.7″ x 2.9″)
Weight:	400g (14.1 oz.)
Optional accessories:	Lens Hood HN-3 Hard Lens Case CL-31S Soft Leather Lens Pouch #62 Plastic Lens Case CP-9 Miscellaneous 52mm Filters Gelatine Filter Holder AF-1
Usable teleconverters:	Autofocus Converter TC-16A 1.4x Teleconverter TC-14A 2x Teleconverter TC-201

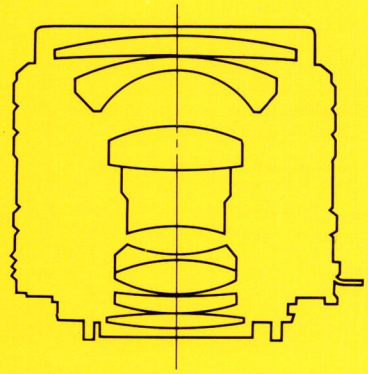

Nikkor 35mm f/2

Product number:	1428
Focal length:	35mm
Maximum aperture:	f/2
Picture angle:	62°
Optical construction:	8 elements in 6 groups
Minimum focusing distance:	0.3m (1 ft.)
Aperture range:	f/2–f/22
Lens aperture:	Via automatic diaphragm
Filter size:	52mm diameter
Dimensions:	63mm dia. x 59.5mm (2.5″ x 2.3″)
Weight:	280g (9.9 oz.)
Optional accessories:	Lens Hood HN-3 Hard Lens Case CL-31S Soft Leather Lens Pouch #61 Plastic Lens Case CP-8 Miscellaneous 52mm Filters Gelatine Filter Holder AF-1
Usable teleconverters:	Autofocus Converter TC-16A 1.4x Teleconverter TC-14A 2x Teleconverter TC-201

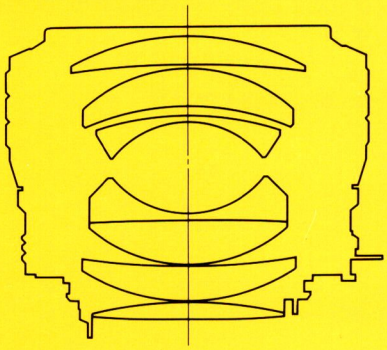

Nikkor 50mm f/1.2

Nikon Advanced Systems Dealer

Product number:	1435
Focal length:	50mm
Maximum aperture:	f/1.2
Picture angle:	46°
Optical construction:	7 elements in 6 groups
Minimum focusing distance:	0.5m (1.7 ft.)
Aperture range:	f/1.2–f/16
Lens aperture:	Via automatic diaphragm
Filter size:	52mm diameter
Dimensions:	68.5mm dia. x 59mm (2.7″ x 2.3″)
Weight:	380g (13.4 oz.)
Optional accessories:	Lens Hood HS-12 Rubber Lens Hood HR-2 Hard Lens Case CL-31S Soft Leather Lens Pouch #61 Plastic Lens Case CP-8 Miscellaneous 52mm Filters Gelatine Filter Holder AF-1
Usable teleconverters:	Autofocus Converter TC-16A 1.4x Teleconverter TC-14A 2x Teleconverter TC-201

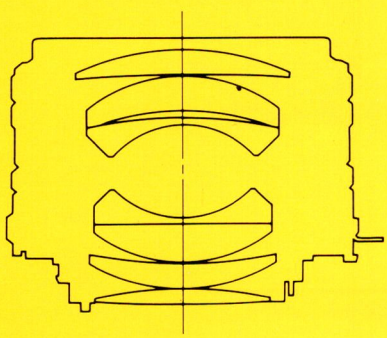

Nikkor 50mm f/1.4

Nikon CONSUMER PRODUCTS DEALER

Product number:	1433
Focal length:	50mm
Maximum aperture:	f/1.4
Picture angle:	46°
Optical construction:	7 elements in 6 groups
Minimum focusing distance:	0.45m (1.5 ft.)
Aperture range:	f/1.4–f/16
Lens aperture:	Via automatic diaphragm
Filter size:	52mm diameter
Dimensions:	63mm dia. x 50.5mm (2.5″ x 2.0″)
Weight:	250g (8.8 oz.)
Optional accessories:	Lens Hood HS-9 Rubber Lens Hood HR-1 Hard Lens Case CL-30S Soft Leather Lens Pouch #61 Plastic Lens Case CP-8 Miscellaneous 52mm Filters Gelatine Filter Holder AF-1
Usable teleconverters:	Autofocus Converter TC-16A 1.4x Teleconverter TC-14A 2x Teleconverter TC-201

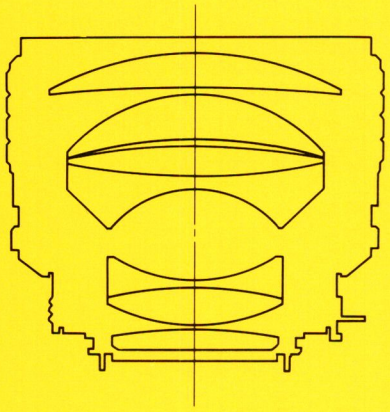

Nikkor 85mm f/1.4

Nikon Advanced Systems Dealer

Product number:	1450
Focal length:	85mm
Maximum aperture:	f/1.4
Picture angle:	28° 30′
Optical construction:	7 elements in 5 groups
Minimum focusing distance:	0.85m (3 ft.)
Aperture range:	f/1.4–f/16
Lens aperture:	Via automatic diaphragm
Filter size:	72mm diameter
Lens hood:	Supplied (HN-20)
Dimensions:	80.5mm dia. x 72.5mm (3.2″ x 2.9″)
Weight:	620g (21.9 oz.)
Optional accessories:	Hard Lens Case CL-34A Plastic Lens Case CP-9 Miscellaneous 72mm Filters Gelatine Filter Holder AF-2
Usable teleconverters:	Autofocus Converter TC-16A 1.4x Teleconverter TC-14A 2x Teleconverter TC-201

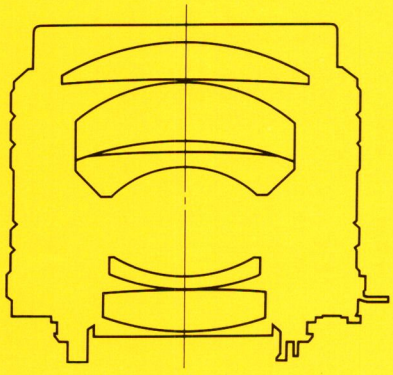

Nikkor 85mm f/2

Nikon CONSUMER PRODUCTS DEALER

Product number:	1451
Focal length:	85mm
Maximum aperture:	f/2
Picture angle:	28° 30′
Optical construction:	5 elements in 5 groups
Minimum focusing distance:	0.85m (3 ft.)
Aperture range:	f/2–f/22
Lens aperture:	Via automatic diaphragm
Filter size:	52mm diameter
Lens hood:	Supplied (HS-10)
Dimensions:	63mm dia. x 60.5mm (2.5″ x 2.4″)
Weight:	310g (10.9 oz.)
Optional accessories:	Hard Lens Case CL-31S Soft Leather Lens Pouch #61 Plastic Lens Case CP-8 Miscellaneous 52mm Filters Gelatine Filter Holder AF-1
Usable teleconverters:	Autofocus Converter TC-16A 1.4x Teleconverter TC-14A 2x Teleconverter TC-201

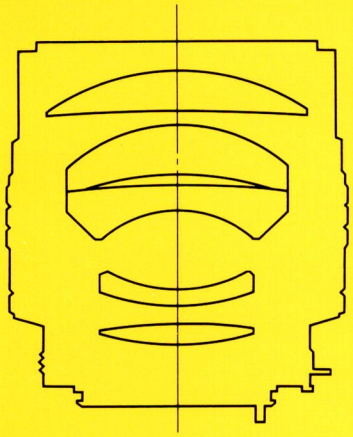

Nikkor 105mm f/1.8

Nikon Advanced Systems Dealer

Product number:	1457
Focal length:	105mm
Maximum aperture:	f/1.8
Picture angle:	23° 20′
Optical construction:	5 elements in 5 groups
Minimum focusing distance:	1m (3.5 ft.)
Aperture range:	f/1.8–f/22
Lens aperture:	Via automatic diaphragm
Filter size:	62mm diameter
Lens hood:	Built-in
Dimensions:	78.5mm dia. x 80.5mm (3.1″ x 3.5″)
Weight:	580g (20.5 oz.)
Optional accessories:	Hard Lens Case CL-15S Soft Leather Lens Pouch #62 Plastic Lens Case CP-9 62-72mm Filter Adapter Ring UR-1 Miscellaneous 62mm Filters Miscellaneous 72mm Filters Gelatine Filter Holder AF-2
Usable teleconverters:	Autofocus Converter TC-16A 1.4x Teleconverter TC-14A 2x Teleconverter TC-201

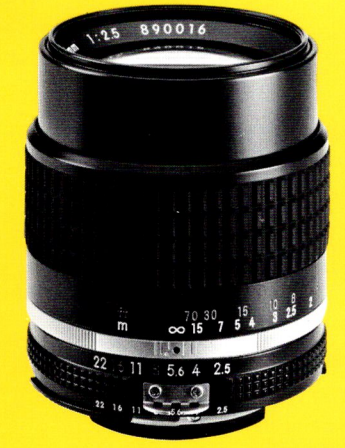

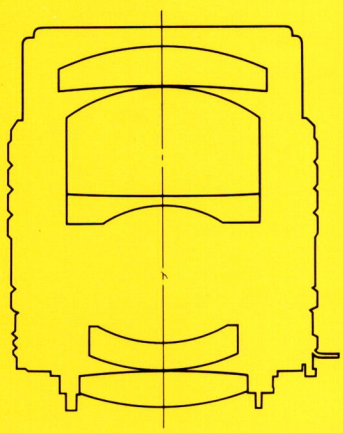

Nikkor 105mm f/2.5

Nikon CONSUMER PRODUCTS DEALER

Product number:	1456
Focal length:	105mm
Maximum aperture:	f/2.5
Picture angle:	23° 20′
Optical construction:	5 elements in 4 groups
Minimum focusing distance:	1m (3.5 ft.)
Aperture range:	f/2.5–f/22
Lens aperture:	Via automatic diaphragm
Filter size:	52mm diameter
Lens hood:	Built-in
Dimensions:	64mm dia. x 77.5mm (2.5″ x 3.1″)
Weight:	435g (15.4 oz.)
Optional accessories:	Hard Lens Case CL-32S Soft Leather Lens Pouch #62 Plastic Lens Case CP-9 Miscellaneous 52mm Filters Gelatine Filter Holder AF-1
Usable teleconverters:	Autofocus Converter TC-16A 1.4x Teleconverter TC-14A 2x Teleconverter TC-201

Nikkor 135mm f/2

Nikon Advanced Systems Dealer

Product number:	1459
Focal length:	135mm
Maximum aperture:	f/2
Picture angle:	18°
Optical construction:	6 elements in 4 groups
Minimum focusing distance:	1.3m (4.5 ft.)
Aperture range:	f/2–f/22
Lens aperture:	Via automatic diaphragm
Filter size:	72mm diameter
Lens hood:	Built-in
Dimensions:	80.5mm dia. x 103mm (3.2″ x 4.1″)
Weight:	860g (30.4 oz.)
Optional accessories:	Hard Lens Case CL-15S Plastic Lens Case CP-9 Miscellaneous 72mm Filters Gelatine Filter Holder AF-2
Usable teleconverters:	Autofocus Converter TC-16A 1.4x Teleconverter TC-14A 2x Teleconverter TC-201

Nikkor 135mm f/2.8

Nikon CONSUMER PRODUCTS DEALER

Product number:	1462
Focal length:	135mm
Maximum aperture:	f/2.8
Picture angle:	18°
Optical construction:	5 elements in 4 groups
Minimum focusing distance:	1.3m (4.5 ft.)
Aperture range:	f/2.8–f/32
Lens aperture:	Via automatic diaphragm
Filter size:	52mm diameter
Lens hood:	Built-in
Dimensions:	64mm dia. x 91.5mm (2.5″ x 3.6″)
Weight:	435g (15.4 oz.)
Optional accessories:	Hard Lens Case CL-32S Soft Leather Lens Pouch #62 Plastic Lens Case CP-9 Miscellaneous 52mm Filters Gelatine Filter Holder AF-1
Usable teleconverters:	Autofocus Converter TC-16A 1.4x Teleconverter TC-14A 1.4x Teleconverter TC-14B 2x Teleconverter TC-201

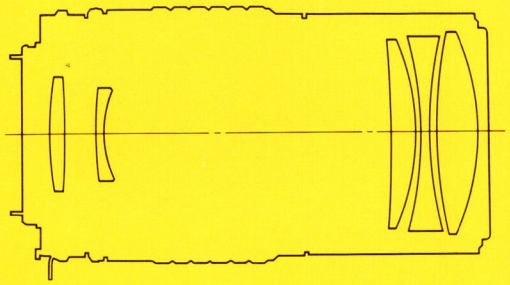

Nikkor 200mm f/4

Product number:	1467
Focal length:	200mm
Maximum aperture:	f/4
Picture angle:	12° 20′
Optical construction:	5 elements in 5 groups
Minimum focusing distance:	2m (7 ft.)
Aperture range:	f/4–f/32
Lens aperture:	Via automatic diaphragm
Filter size:	52mm diameter
Lens hood:	Built-in
Dimensions:	65mm dia. x 124mm (2.6″ x 4.9″)
Weight:	510g (18 oz.)
Optional accessories:	Hard Lens Case CL-13A Soft Leather Lens Pouch #63 Plastic Lens Case CP-9 Miscellaneous 52mm Filters Gelatine Filter Holder AF-1
Usable teleconverters:	1.4x Teleconverter TC-14A 2x Teleconverter TC-201

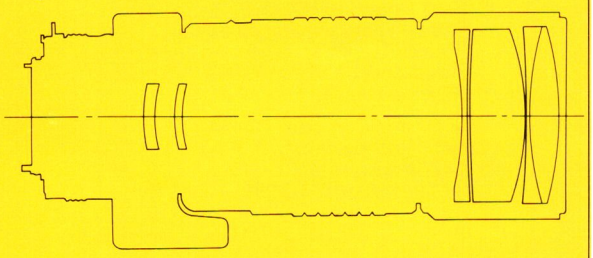

Nikkor 300mm f/4.5

Product number:	1470
Focal length:	300mm
Maximum aperture:	f/4.5
Picture angle:	8° 10′
Optical construction:	6 elements in 5 groups
Minimum focusing distance:	3.5 (12 ft.)
Aperture range:	f/4.5–f/32
Lens aperture:	Via automatic diaphragm
Filter size:	72mm diameter
Lens hood:	Built-in
Tripod mount:	Via built-in, rotatable collar
Dimensions:	78.5mm dia. x 203mm (3.1″ x 8.0″)
Weight:	1200g (42.4 oz.)
Optional accessories:	Hard Lens Case CL-20A Miscellaneous 72mm Filters Gelatine Filter Holder AF-2
Usable teleconverters:	1.4x Teleconverter TC-14A 1.4x Teleconverter TC-14B 2x Teleconverter TC-301

Nikon Advanced Systems Dealer

Nikkor ED Lenses with Internal Focusing

A new Nikon technique has produced a new class of telephoto lenses.

Nikon first used the term "internal focusing" about 10 years ago. What does this term mean, what advantages does this principle have for the user and what types of lenses are equipped with this technology?

As a rule, every normal lens focusing system has a system which moves the entire optical system in a barrel during focusing (Fig. 1). This mechanism is complicated and bulky and has to be made of particularly robust material. These preconditions are invariably disadvantageous in terms of the weight and size of the lens. As the focal length and maximum aperture increase, lenses based on this conventional design become technically more complicated and heavy.

Although these conventional lenses are based on well established designs, Nikon has nevertheless been making efforts to improve the focusing systems of long focal length lenses. The result is a new class of telephoto lenses, lenses with internal focusing-referred to as the IF system. This IF system permits very convenient and rapid focusing. This is particularly important where the photographer is concerned with newspaper reporting or sport or animal photography-subjects which do not leave him very much time for focusing. Furthermore, the total length of a conventional lens changes during focusing, making hand-held shooting with long focal length lenses more difficult; this is not the case with the new IF designs. Here, an easily operated ring in a convenient position permits focusing with a completely rigid barrel. Because a lens group is moved inside the lenses system (Fig. 2), these new Nikkor lenses are usually compact and free from any change in the overall center of gravity.

At the same time, this novel technology has made it possible to achieve substantially better imaging and an unusually short minimum focusing distance. These lenses are therefore also suitable for close-ups (for example of small animals) from relatively far away.

Most IF Nikkor lens systems have lenses made of ED glass. Because of its particularly low dispersion, this ED glass permits exception correction of color abberation over a very wide wavelength range. The optical properties of ED glass are similar to those of calcium fluoride glasses; however, the ED glasses have the great advantage that the low dispersion remains constant over a wide temperature range. Moreover, this material is much harder and much more scratch-resistant and is therefore also suitable for front and rear lens elements.

The ED lenses provide a substantial improvement in quality: significantly cleaner contours coupled with sharp focus and fresher colors with greater saturation - and all this with the aperture fully open!

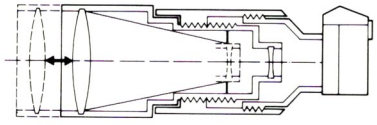

Fig. 1

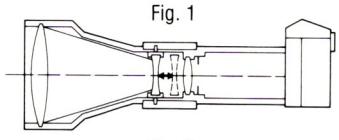

Fig. 2

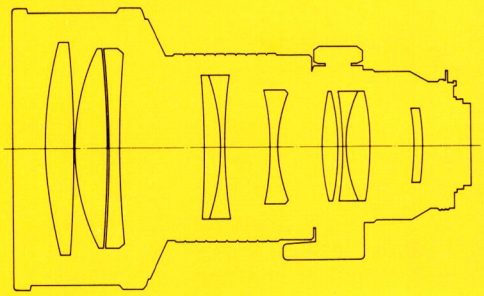

Nikkor ED 200mm f/2N IF

Product number:	1465
Focal length:	200mm
Maximum aperture:	f/2
Picture angle:	12° 20′
Optical construction:	10 elements in 8 groups
Minimum focusing distance:	2.5m (9 ft.)
Aperture range:	f/2–f/22
Lens aperture:	Via automatic diaphragm
Filter size:	Gelatine filter can be inserted via special rear mount; front end of lens has built-in protective glass
Lens hood:	Extension Lens Hood HE-4 provided
Tripod mount:	Via built-in, rotatable tripod collar
Lens case:	Supplied (CT-200)
Dimensions:	132mm dia. x 233.5mm (5.4″ x 8.7″)
Weight:	2550g (84.8 oz.)
Usable teleconverters:	Autofocus Converter TC-16A 1.4x Teleconverter TC-14A 1.4x Teleconverter TC-14B 2x Teleconverter TC-201

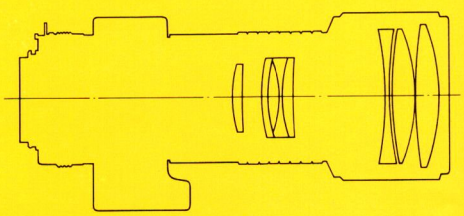

Nikkor ED 300mm f/4.5 IF

Product number:	1488
Focal length:	300mm
Maximum aperture:	f/4.5
Picture angle:	8° 10′
Optical construction:	7 elements in 6 groups
Minimum focusing distance:	2.5m (10 ft.)
Aperture range:	f/4.5–f/32
Lens aperture:	Via automatic diaphragm
Filter size:	72mm diameter (P=0.75mm)
Lens hood:	Built-in
Tripod mount:	Via built-in, rotatable tripod collar
Lens case:	Supplied (CL-20A)
Dimensions:	80mm dia. x 200mm (3.1″ x 7.9″)
Weight:	1060g (35 oz.)
Optional accessories:	Miscellaneous 72mm Filters Gelatine Filter Holder AF-2
Usable teleconverters:	1.4x Teleconverter TC-14B 2x Teleconverter TC-201

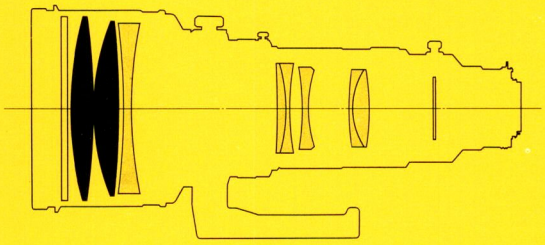

Nikkor ED 400mm f/2.8 IF

Nikon Advanced Systems Dealer

Product number:	1499
Focal length:	400mm
Maximum aperture:	f/2.8
Picture angle:	6° 10′
Optical construction:	8 elements in 6 groups
Minimum focusing distance:	4m (15 ft.)
Aperture range:	f/2.8–f/22
Lens aperture:	Via automatic diaphragm
Filter size:	52mm filters via slip-in holder; gelatine filters via special holder provided; front end of lens has built-in slip-in protective glass
Lens hood:	Built-in, with Extension Hood HE-3 provided
Tripod mount:	Via built-in, rotatable tripod collar
Lens case:	Supplied (CT-400)
Dimensions:	163mm dia. x 386.5mm (6.4″ x 15.2″)
Weight:	5150g (180.3 oz.)
Optional accessories:	Miscellaneous 52mm Filters
Usable teleconverters:	1.4x Teleconverter TC-14B 2x Teleconverter TC-201 2x Teleconverter TC-301

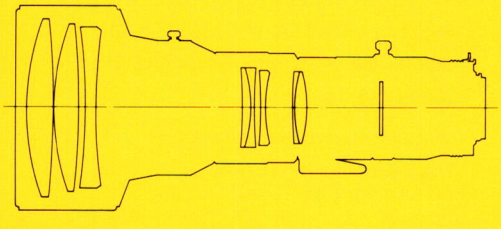

Nikkor ED 400mm f/3.5 IF

Nikon Advanced Systems Dealer

Product number:	1473
Focal length:	400mm
Maximum aperture:	f/3.5
Picture angle:	6° 10′
Optical construction:	8 elements in 6 groups
Minimum focusing distance:	4.5m (15 ft.)
Aperture range:	f/3.5–f/22
Lens aperture:	Via automatic diaphragm
Filter size:	122mm filters via front thread; 39mm filters via slip-in holder; gelatine filters via special slip-in holder provided
Lens hood:	Built-in
Tripod mount:	Via built-in, rotatable tripod collar
Lens case:	Supplied (CL-61A)
Dimensions:	134mm dia. x 304mm (5.3″ x 12″)
Weight:	2800g (98.9 oz.)
Optional accessories:	Miscellaneous 39mm Filters Miscellaneous 122mm Filters
Usable teleconverters:	1.4x Teleconverter TC-14A 1.4x Teleconverter TC-14B 2x Teleconverter TC-301

Nikkor ED 400mm f/5.6 IF

Product number:	1489
Focal length:	400mm
Maximum aperture:	f/5.6
Picture angle:	6° 10′
Optical construction:	7 elements in 6 groups
Minimum focusing distance:	4m (15 ft.)
Aperture range:	f/5.6–f/32
Lens aperture:	Via automatic diaphragm
Filter size:	72mm diameter (P=0.75mm)
Lens hood:	Built-in
Tripod mount:	Via built-in, rotatable tripod collar
Lens case:	Supplied (CL-27A)
Dimensions:	85mm dia. x 262mm (3.3″ x 10.3″)
Weight:	1200g (42.4 oz.)
Optional accessories:	Miscellaneous 72mm Filters Gelatine Filter Holder AF-2
Usable teleconverters:	1.4x Teleconverter TC-14B 2x Teleconverter TC-301

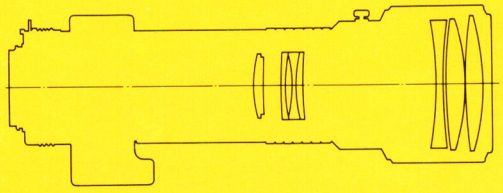

Nikkor ED 500mm f/4 P IF

Product number:	1447
Focal length:	500mm
Maximum aperture:	f/4
Picture angle:	5°
Optical construction:	8 elements in 6 groups
Special characteristics:	Equipped with electronic circuitry including CPU to enable use of all exposure operation modes with Nikon N2020, N4004S, N8008 and F4S autofocus cameras; compatible with other Nikon SLR cameras via normal mechanical interface provided at lens mount
Minimum focus distance:	5m (20 ft.); preset lock ring fitted coaxial with focus ring for rapid refocus operation at preselected focus distance
Aperture range:	f/4-f/22; minimum aperture lock provided
Lens aperture:	Via automatic diaphragm
Filter size:	Slip-in filters via slip-in holder; gelatine filters via special slip-in holder provided; front end of lens has built-in protective glass
Lens hood:	Supplied (Slip-on Hood HK-17)
Tripod mount:	Via built-in rotatable tripod collar
Lens case:	Supplied (Fitted Trunk Case CT-500)
Dimensions:	138mm dia. x 393mm (5.4″ x 15.5″)
Weight:	3000g (6.6 lbs.)
Optional accessories:	Miscellaneous 39mm Filters
Usable Teleconverters:	1.4x Teleconverter TC-14B 2x Teleconverter TC-301

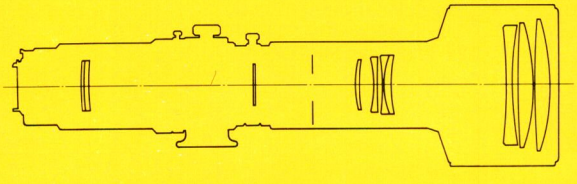

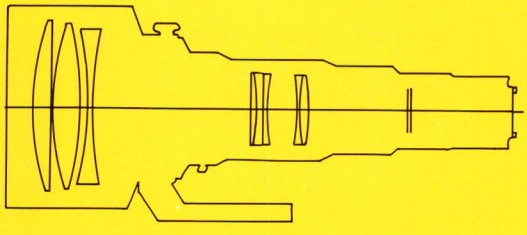

Nikkor ED 600mm f/4N IF

Product number:	1492
Focal length:	600mm
Maximum aperture:	f/4
Picture angle:	4° 10′
Optical construction:	8 elements in 6 groups
Minimum focusing distance:	6.5m (25 ft.)
Aperture range:	f/4–f/22
Lens aperture:	Via automatic diaphragm
Filter size:	39mm filters via slip-in holder; gelatine filters via special slip-in holder provided; front end of lens has built-in protective glass
Lens hood:	Built-in, with Extension Hood HE-5 provided
Tripod mount:	Via built-in, rotatable tripod collar
Lens case:	Supplied (CT-602)
Dimensions:	173mm dia. x 473.5mm (7″ x 18.1″)
Weight:	5650g (222.5 oz.)
Optional accessories:	Miscellaneous 39mm Filters
Usable teleconverters:	1.4x Teleconverter TC-14B 2x Teleconverter TC-301

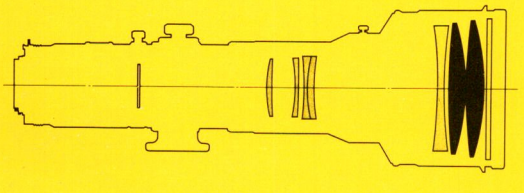

Nikkor ED 600mm f/5.6N IF

Product number:	1494
Focal length:	600mm
Maximum aperture:	f/5.6
Picture angle:	4° 10′
Optical construction:	7 elements in 6 groups
Minimum focusing distance:	5m (20 ft.)
Aperture range:	f/5.6–f/32
Lens aperture:	Via automatic diaphragm
Filter size:	39mm filter via slip-in holder; gelatine filters via special slip-in holder provided; front end of lens has built-in protective glass
Lens hood:	Built-in, with Extension Hood HE-4 provided
Tripod mount:	Via built-in, rotatable tripod collar
Lens case:	Supplied (CT-603)
Dimensions:	132mm dia. x 395.5mm (5.3″ x 15″)
Weight:	2800g (95.4 oz.)
Optional accessories:	Miscellaneous 39mm Filters
Usable teleconverters:	1.4x Teleconverter TC-14B 2x Teleconverter TC-301

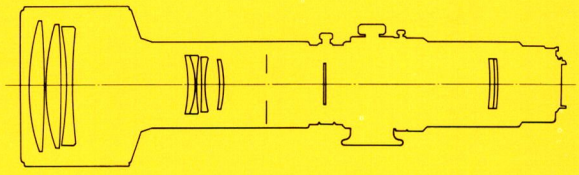

Nikkor ED 800mm f/5.6 IF

Product number:	1446
Focal length:	800mm
Maximum aperture:	f/5.6
Picture angle:	3°
Optical construction:	8 elements in 6 groups
Minimum focusing distance:	8m (30 ft.)
Aperture range:	f/5.6–f/32
Lens aperture:	Via automatic diaphragm
Filter size:	52mm filters via slip-in holder; gelatine filter via special slip-in holder provided; front of lens has built-in protective glass
Lens hood:	Built-in, with Extension Hood HE-3 provided
Tripod mount:	Via built-in, rotatable tripod collar
Lens case:	Supplied (CT-800)
Dimensions:	163mm dia. x 554mm (6.4″ x 21.8″)
Weight:	5450g (190.8 oz.)
Optional accessories:	Miscellaneous 52mm Filters
Usable teleconverters:	1.4x Teleconverter TC-14B 2x Teleconverter TC-301

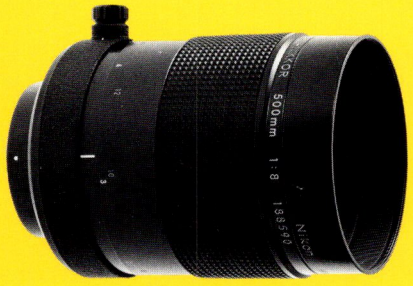

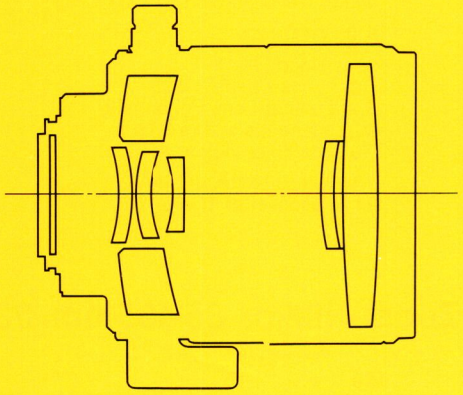

Reflex-Nikkor 500mm f/8N

Product number:	953
Focal length:	500mm
Maximum aperture:	f/8
Picture angle:	5°
Optical construction:	6 elements in 6 groups
Minimum focusing distance:	1.5m (5 ft.); 1:2.5 reproduction ratio provided
Lens aperture:	Fixed aperture; exposure control via ND filter
Filter size:	39mm filter via rear mount (82mm filter via front thread also useable); 5 filters (L37c, 056, A2, B2 and ND-4) supplied; a filter must always be mounted
Lens hood:	Supplied (HN-27)
Tripod mount:	Via built-in, rotatable tripod collar
Lens case:	Supplied (CL-39)
Dimensions:	89mm dia. x 116mm (3.5″ x 4.6″)
Weight:	840g (29.7 oz.)
Optional accessories:	Miscellaneous 39mm Filters
Usable teleconverters:	1.4x Teleconverter TC-14A 1.4x Teleconverter TC-14B 2x Teleconverter TC-201

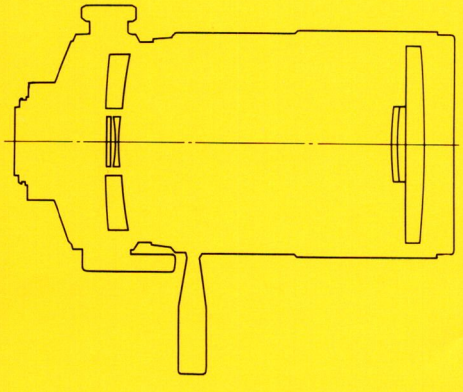

Reflex-Nikkor 1000mm f/11

Product number:	952
Focal length:	1000mm
Maximum aperture:	f/11
Picture angle:	2° 30′
Optical construction:	5 elements in 5 groups
Minimum focusing distance:	8m (25 ft.)
Lens aperture:	Fixed aperture exposure control via ND filter
Filter size:	39mm filter via rear mount; 5 filters (L37c, 056, A2, B2, and ND-4) supplied; a filter must always be mounted
Lens hood:	Built-in
Tripod mount:	Via built-in, rotatable tripod collar
Lens case:	Supplied (CL-29)
Dimensions:	119mm dia. x 241mm (4.7″ x 9.5″)
Weight:	1900g (67.1 oz.)
Optional accessories:	Miscellaneous 39mm Filters
Usable teleconverters:	1.4x Teleconverter TC-14A 1.4x Teleconverter TC-14B 2x Teleconverter TC-201 2x Teleconverter TC-301

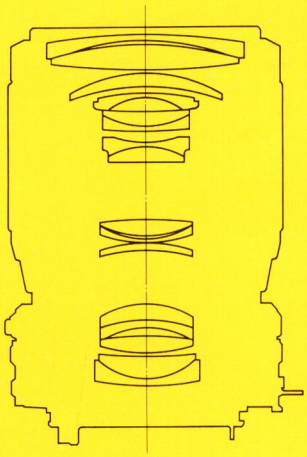

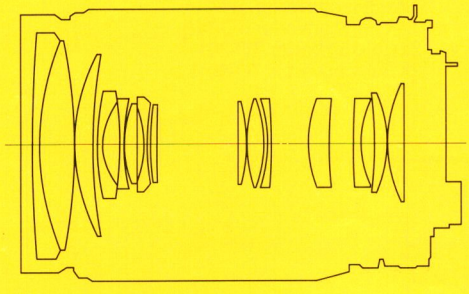

Zoom Nikkor 35-105mm f/3.5-4.5

Product number:	1477
Focal length:	35-105mm
Maximum aperture:	f/3.3–f/4.5
Picture angle:	62°-23° 20′
Optical construction:	16 elements in 12 groups
Special characteristics:	One-touch operation for zooming and focusing maximum reproduction ratio of 1:4 at 35mm setting in the macro mode
Minimum focusing distance:	1.4m (5 ft.) as standard; and 0.27m (0.9 ft.) at macro setting
Aperture range:	f/3.5–f/22
Lens aperture:	Via automatic diaphragm
Filter size:	52mm diameter
Dimensions:	64mm dia. x 95mm (2.5″ x 3.8″)
Weight:	510g (18.0 oz.)
Optional accessories:	Lens Hood HK-11 Hard Lens Case CL-33S Soft Leather Lens Pouch #62 Miscellaneous 52mm Filters Gelatine Filter Holder AF-1
Usable teleconverters:	1.4x Teleconverter TC-14A 2x Teleconverter TC-201

Zoom-Nikkor 35-135mm f/3.5-4.5

Product number	1976
Focal length:	35-135mm
Maximum aperture:	f/3.5-f/4.5
Picture angle:	62°-18°
Optical construction:	15 elements in 14 groups
Special characteristics:	One-touch operation for zooming & focusing; maximum reproduction ratio of 1:3.5 production via macro setting
Minimum focus distance:	1.5m (5 ft.) as normal; 0.4m (1.4 ft.) via macro setting
Aperture range:	f/3.5-f/22
Lens aperture:	Via automatic diaphragm
Filter size:	62mm diameter
Dimensions:	72mm dia. x 117 (2.7″ x 4.1″)
Weight:	630g (21 oz.)
Optional accessories:	Lens Hood HB-1 Hard Lens Case CL-41S Soft Leather Case No. 62 62-72mm Filter Adaptor Ring UR-1 Miscellaneous 62mm Filters Miscellaneous 72mm Filters Gelatine Filter Holder AF-2
Usable teleconverters:	1.4x Teleconverter TC-14A 2x Teleconverter TC-201

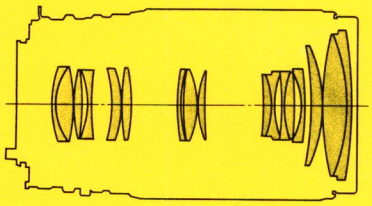

Zoom-Nikkor 35-200mm f/3.5-4.5

Product number:	1445
Focal length:	35-200mm
Maximum aperture:	f/3.5–f/4.5
Picture angle:	62°-12° 20′
Optical construction:	17 elements in 13 groups
Special characteristics:	One-touch operation for zooming and focusing; max. magnification of 1:4 provided at macro setting
Minimum focusing distance:	1.6m (4 ft.) as standard; 0.3m (1 ft.) at macro setting
Aperture range:	f/3.5–f/22
Lens aperture:	Via automatic diaphragm
Filter size:	62mm diameter
Dimensions:	70mm dia. x 128mm (2.7″ x 5″)
Weight:	740g (25.9 oz.)
Optional accessories:	Lens Hood HK-15 Hard Lens Case CL-13A Soft Leather Lens Pouch #63 62-72mm Filter Adapter Ring UR-1 Miscellaneous 62mm Filters Miscellaneous 72mm Filters Gelatine Filter Holder AF-2
Usable teleconverters:	2x Teleconverter TC-201

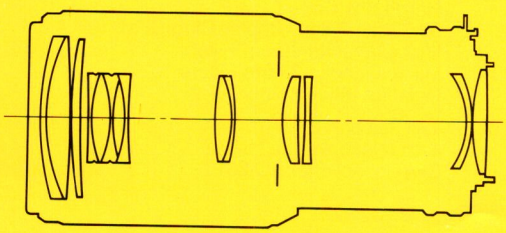

Zoom-Nikkor 80-200mm f/4

Product number:	1484
Focal length:	80-200mm
Maximum aperture:	f/4
Picture angle:	30° 10′ -12° 20′
Optical construction:	13 elements in 9 groups
Special characteristics:	One touch operation for zooming and focusing
Minimum focusing distance:	1.2m (4 ft.)
Aperture range:	f/4–f/32
Lens aperture:	Via automatic diaphragm
Filter size:	62mm diameter (P=0.75mm)
Dimensions:	73mm dia. x 162mm (2.9″ x 6.4″)
Weight:	810g (28.6 oz.)
Optional accessories:	Lens Hood HN-23 Hard Lens Case CL-35A Soft Leather Lens Pouch #63 62-72mm Filter Adapter Ring UR-1 Miscellaneous 62mm Filters Miscellaneous 72mm Filters Gelatine Filter Holder AF-2
Usable teleconverters:	1.4x Teleconverter TC-14B 2x Teleconverter TC-201

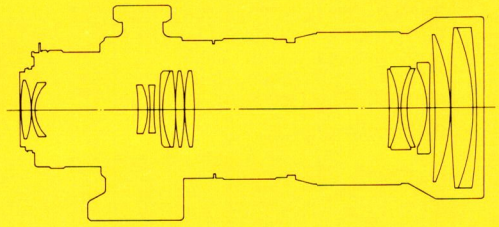

Zoom-Nikkor ED 50-300mm f/4.5

Product number:	1483
Focal length:	50-300mm
Maximum aperture:	f/4.5
Picture angle:	46° -8′ 10°
Optical construction:	15 elements in 11 groups
Special characteristics:	Two-ring operation for zooming and focusing
Minimum focusing distance:	2.5m (8.5 ft.)
Aperture range:	f/4.5–f/32
Lens aperture:	Via automatic diaphragm
Filter size:	95mm diameter
Tripod mount:	Via built-in rotatable tripod collar
Lens case:	Supplied (CL-64)
Dimensions:	98mm dia. x 247mm (3.9″ x 9.7″)
Weight:	1950g (68.9 oz.)
Optional accessories:	Lens Hood HK-5 Miscellaneous 95mm Filters
Usable teleconverters:	1.4x Teleconverter TC-14A 2x Teleconverter TC-201

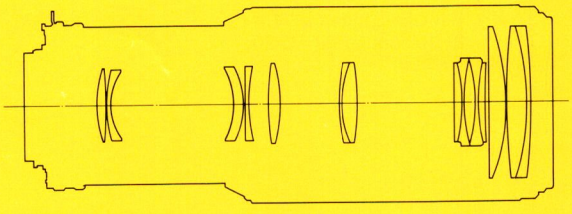

Zoom-Nikkor 100-300mm f/5.6

Product number:	1481
Focal length:	100-300mm
Maximum aperture:	f/5.6
Picture angle:	24° 20′ -8° 10′
Optical construction:	14 elements in 10 groups
Special characteristics:	One touch operation for zooming and focusing; magnification ratio 1:4.4 provided at 100mm macro setting
Minimum focusing distance:	2m (7 ft.) as standard; 0.71m (2.34) ft.) at macro setting
Aperture range:	f/5.6–f/32
Lens aperture:	Via automatic diaphragm
Filter size:	62mm diameter (P=0.75mm)
Lens hood:	Supplied (HN-24)
Dimensions:	74mm dia. x 207mm (2.9″ x 8.4″)
Weight:	930g (32.8 oz.)
Optional accessories:	Lens Hood HN-24 Hard Lens Case CL-40 62-72mm Filter Adapter Ring UR-1 Miscellaneous 62mm Filters Miscellaneous 72mm Filters Gelatine Filter Holder AF-2
Usable teleconverters:	1.4x Teleconverter TC-14A 1.4x Teleconverter TC-14B 2x Teleconverter TC-201

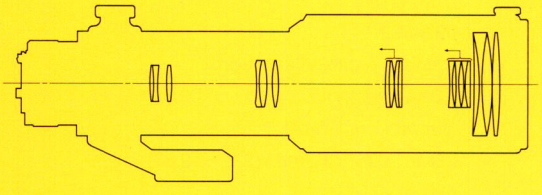

Zoom-Nikkor ED 180-600mm f/8

Nikon Advanced Systems Dealer

Product number:	1490
Focal length:	180-600mm
Maximum aperture:	f/8
Picture angle:	13° 40′-4° 10′
Optical construction:	18 elements in 11 groups
Special characteristics:	One-touch operation for zooming and focusing
Minimum focusing distance:	2.5m (9 ft.) as standard
Aperture range:	f/8–f/32
Lens aperture:	Via automatic diaphragm
Filter size:	95mm diameter
Lens hood:	Supplied (HN-16)
Tripod mount:	Via built-in, rotatable tripod collar
Dimensions:	105mm dia. x 402mm (4.1 x 16.0″)
Weight:	3600g (126.9 oz.)
Optional accessories:	Lens Case CZ-1860 Miscellaneous 95mm Filters
Usable teleconverters:	1.4x Teleconverter TC-14B 2x Teleconverter TC-301

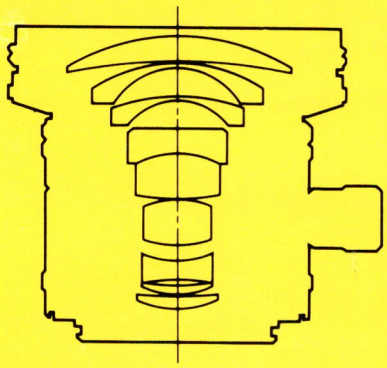

PC lenses are designed for all-around image control. PC stands for perspective control. You can shift the lens barrel of a PC-Nikkor to 11mm off-axis and rotate it a full 360°. This gives you truly full image control. PC lenses are convenient for correcting the distortion caused by horizontal and vertical lines in architectural and interior photography, or for avoiding the obstacles in front of your subject.

PC-Nikkor 28mm f/3.5

Product number	1024
Focal length:	28mm
Maximum aperture:	f/3.5
Picture angle:	74°, 92° covering power via shift operation
Optical construction:	9 elements in 8 groups
Maximum lateral shift:	Up to 11mm, depending on format positioning
Minimum focus distance:	0.3m (1 ft.)
Aperture range:	f/3.5-f/22
Lens aperture:	Manual preset diaphragm
Filter size:	72mm diameter
Lens case:	Supplied (CL-34A)
Dimensions:	78mm dia. x 69mm (3.1″ x 2.8″) 69mm (2.6″)
Weight:	380g (13.4 oz.)
Optional accessories:	Lens Hood HN-9 Soft Leather Lens Pouch #62 Miscellaneous 72mm filters Gelatine Filter Holder AF-2

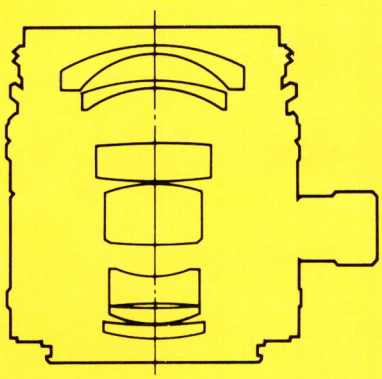

PC-Nikkor 35mm f/2.8N

Product number:	1025
Focal length:	35mm
Maximum aperture:	f/2.8
Picture angle:	62°; 78° covering power via shift operation
Optical construction:	7 elements in 7 groups
Maximum lateral shift:	Up to 11mm, depending on format positioning
Minimum focusing distance:	0.3m (1 ft.)
Aperture range:	f/2.8–f/32
Lens aperture:	Manually preset diaphragm
Filter size:	52mm diameter
Lens case:	Supplied (CL-34A)
Dimensions:	62mm dia. x 66mm (2.4″ x 2.6″)
Weight:	320g (11.3 oz.)
Optional accessories:	Lens Hood HN-1 Soft Leather Lens Pouch #62 Miscellaneous 52mm Filters Gelatine Filter Holder AF-1

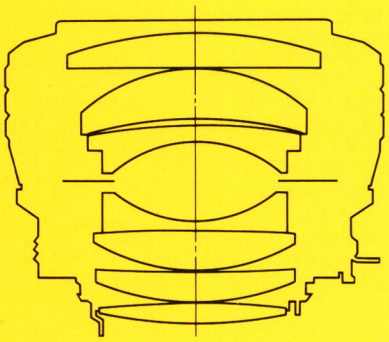

Noct-Nikkor 58mm f/1.2

Nikon Advanced Systems Dealer

Product number:	1439
	This lens was specially designed for photography at night and in poor light. It has an aspherical lens surface in order to correct coma at full aperture. Bright image areas against a dark background are optimally reproduced. The large maximum aperture permits high shutter speeds, particular important for night photography without a tripod; also, the large maximum aperture yields a viewfinder image that is exceptionally bright, permitting particularly fast and precise focusing even when illumination is poor.
Focal length:	58mm
Maximum aperture:	f/1.2
Picture angle:	40° 50′
Optical construction:	7 elements in 6 groups
Minimum focusing distance:	0.5m (1.7 ft.)
Aperture range:	f/1.2–f/16
Lens aperture:	Via automatic diaphragm
Filter size:	52mm diameter
Dimensions:	74mm dia. x 63mm (2.9″ x 2.5″)
Weight:	465g (16.4 oz.)
Optional accessories:	Lens Hood HS-7 Rubber Lens Hood HR-2 Hard Lens Case CL-31S Soft Leather Lens Pouch #61 Plastic Lens Case CP-8 Miscellaneous 52mm Filters Gelatine Filter Holder AF-1
Usable teleconverters:	Autofocus Converter TC-16A 1.4x Teleconverter TC-14A 2x Teleconverter TC-201

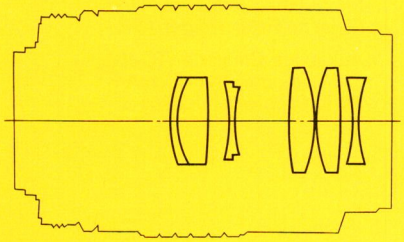

UV-Nikkor 105mm f/4.5

Nikon Advanced Systems Dealer

Product number:	1453 UV rays are electromagnetic waves around 200-400nm. Though the human eye is sensitive only within a range of 380-780 nm, it is possible to get valuable information from UV photography which the human eye cannot catch, particularly in fields as medical and forensic science, criminal lab work, and examination of fine art and industrial works.
Focal length:	105mm
Maximum aperture:	f/4.5
Picture angle:	23° 20′
Optical construction:	6 elements in 6 groups (fluorite and quartz elements)
Minimum focus distance:	0.48m (1.57 ft.)
Aperture range:	f/4.5–f/32
Lens aperture:	Via automatic diaphragm
Filter size:	52mm diameter (P=0.75mm)
Dimensions:	68.5mm dia. x 116.5mm (2.7″ x 4.6″)
Weight:	515g (18 oz.)
Optional accessories:	Hard Lens Case CL-15S Soft Leather Lens Pouch #63 Plastic Lens Case CP-9 Miscellaneous 52mm filters Gelatine Filter Holder AF-1 Auto Extension Tube PN-11
Usable teleconverters:	1.4x Teleconverter TC-14B 2x Teleconverter TC-301

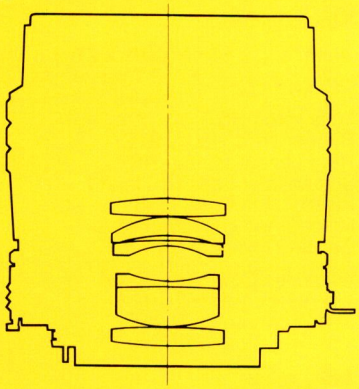

Micro Lenses are designed for close-up work, including macrophotography, a very specialized type of photography demanding the use of a Micro-Nikkor lens. Micro Nikkors offer continuous focusing from infinity to a reproduction ratio of 1:2. The use of optional auto-extension rings or a teleconverter makes even closer focusing possible—from 1:2 to 1:1 life-size.

Micro-Nikkor 55mm f/2.8

Product number:	1442
Focal length:	55mm
Maximum aperture:	f/2.8
Picture angle:	43°
Optical construction:	6 elements in 5 groups
Minimum focus distance:	0.25m (0.9 ft.) Reproductin ratio of 1:2 provided
Aperture range:	f/2.8–f/32
Lens aperture:	Via automatic diaphragm
Filter size:	52mm diameter
Dimensions:	62mm dia. x 70mm (2.5″ x 2.7″)
Weight:	290g (10.9 oz.)
Optional accessories:	Lens Hood HN-3 Hard Lens Case CL-31S (Lens only); CL-33S (with PK-13) Soft Leather Lens Pouch #61 Plastic Lens Case CP-8 Miscellaneous 52mm filters Gelatine Filter Holder AF-1
Usable teleconverters:	Autofocus Converter TC-16A 1.4x Teleconverter TC-14A 2x Teleconverter TC-201

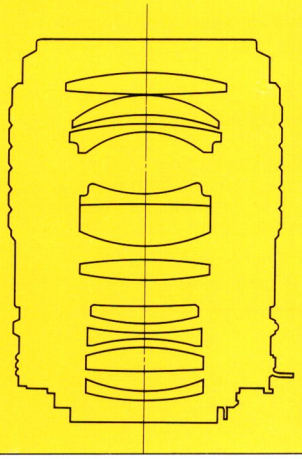

Micro-Nikkor 105mm f/2.8

Product number:	1455
Focal length:	105mm
Maximum aperture:	f/2.8
Picture angle:	23° 20′
Optical construction:	10 elements in 9 groups
Minimum focusing distance:	0.41m (1.34 ft.); reproduction ratio of 1:2 provided
Aperture range:	f/2.8–f/32
Lens aperture:	Via automatic diaphragm
Filter size:	52mm diameter
Lens hood:	Supplied (HS-14)
Dimensions:	66.5mm dia. x 91.5mm (2.6″ x 3.6″)
Weight:	515g (18.2 oz.)
Optional accessories:	Hard Lens Case CL-33S Soft Leather Lens Pouch #63 Plastic Lens Case CP-9 Miscellaneous 52mm Filters Gelatine Filter Holder AF-1
Usable teleconverters:	Autofocus Converter TC-16A 1.4x Teleconverter TC-14A 2x Teleconverter TC-201

Micro-Nikkor 200mm f/4 IF

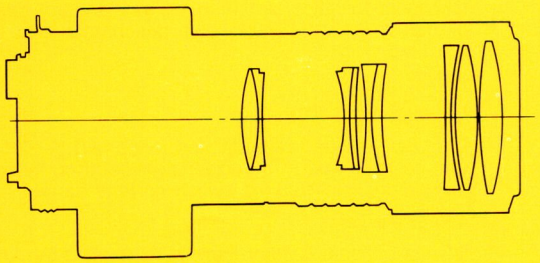

Product number:	1468
Focal length:	200mm
Maximum aperture:	f/4
Picture angle:	12° 20′
Optical construction:	9 elements in 6 groups
Minimum focusing distance:	0.71m (2.34 ft.); reproduction ratio of 1:2 provided
Aperture range:	f/4–f/32
Lens aperture:	Via automatic diaphragm
Filter size:	52mm diameter
Lens hood:	Built-in
Tripod mount:	Via built-in, rotatable tripod collar
Dimensions:	66mm dia. x 180mm (2.6″ x 7.1″)
Weight:	800g (28.3 oz.)
Optional accessories:	Hard Lens Case CL-36 Miscellaneous 52mm Filters Gelatine Filter Holder AF-1
Usable teleconverters:	1.4x Teleconverter TC-14A 1.4x Teleconverter TC-14B 2x Teleconverter TC-201

Nikon Advanced Systems Dealer

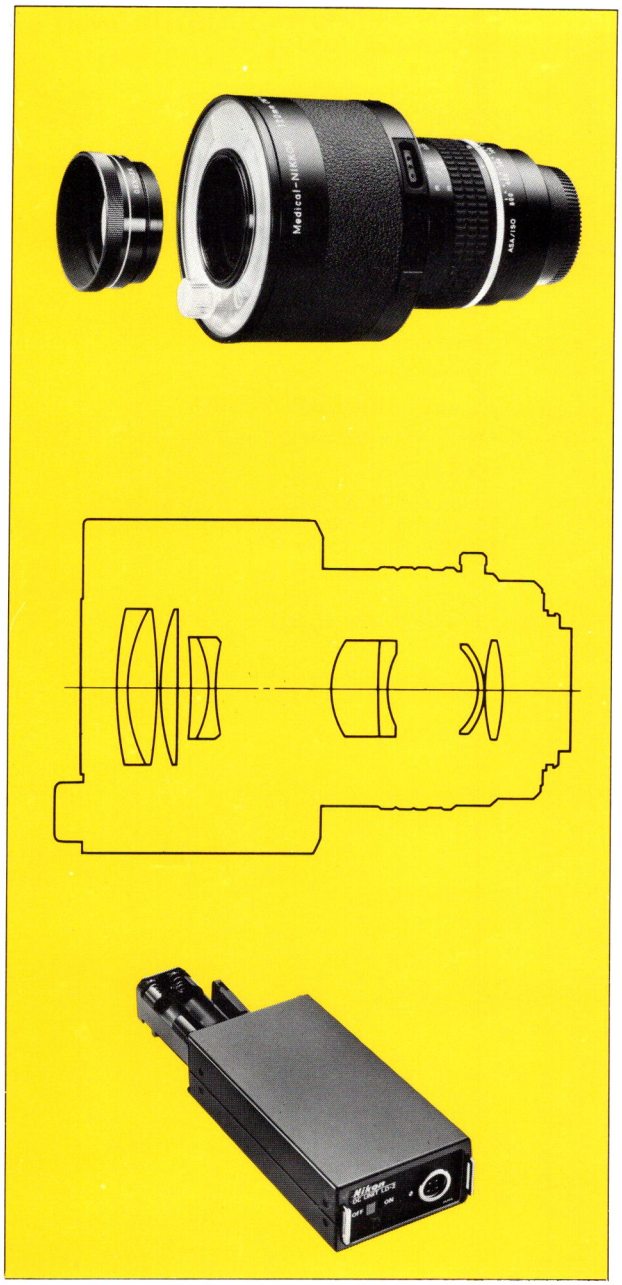

Medical-Nikkor 120mm f/4 IF

Nikon Advanced Systems Dealer

Product number: 983

The Medical Nikkor 120mm f/4 IF is a professional close-up lens with a built-in ringlight. It is widely used in applications ranging from medical photography to general close-ups. By itself, this lens provides continuously variable reproduction ratios from 1/11X to 1X; used in conjunction with a single 2X close-up attachment lens, the ratios are also continuously variable from 0.8X to 2X. You can superimpose the reproduction ratio in use on film. Also, optimum exposure becomes automatic because the aperture is set automatically according to the shooting distance, with flash output itself being determined by the film speed set. This has been made possible through the incorporation into the lens of a "Guide Number flash system."

Focal length: 120mm

Maximum aperture: f/4

Picture angle: 18° 50′ (at 1:11 reproduction ratio)

Optical construction: 9 elements in 6 groups

Focusing distance range: 0.26m-1.6m; provides stepless operation with reproduction ratios of 1:11 to 1:1 as standard; ratios of 1:08 to 2:1 with 2x close-up attachment lens provided

Aperture range: f/4-f/32

Lens aperture: Via automatic diaphragm

Data imprinting: Via LED; stepped reproduction ratios of 1:11—2:1 can be imprinted in the lower right-hand corner of the picture; selected via switch on lens barrel

Filter size: 49mm diameter

Power source: DC via optional Battery Pack LD-2 (eight 1.5V AA-type batteries); AC via optional Power Unit LA-2

Dimensions: 98mm dia. x 150mm (3.9″ x 5.9″), lens only; 150mm x 81mm x 40mm (6.1″ x 3.3″ x 0.2″), Battery Pack LD-2

Weight: 890g (3.14 oz.), lens only; 490g (17.2 oz.), Battery Pack

Optional Accessories: Medical Nikkor Compartment Case
AC Power Unit LA-2
DC Battery Pack LD-2

Film speed	Recycling time		Number of flash	
	Manganese batteries	Alkaline-manganese batteries	Manganese batteries	Alkaline-manganese batteries
ISO 25	About 12 sec.	About 9 sec.	About 50.	About 90.
ISO 100	About 5 sec.	About 4 sec.	About 250	About 450

• Basic lens alone

Reproduction ratio	Focusing distance	Depth of field	Subject size
1:11 (1/11×)	1,6	+ 25,4 – 24,4	264 × 396
1:8 (1/8×)	1,2	+ 17,9 – 17,3	192 × 288
1:6 (1/6×)	0,95	+ 13,2 – 12,7	144 × 216
1:5 (1/5×)	0,83	+ 10,8 – 10,5	120 × 180
1:4 (1/4×)	0,7	+ 8,45 – 8,15	96 × 144
1:3 (1/3×)	0,6	+ 6,18 – 5,97	72 × 108
1:2,5 (1/2,5×)	0,53	+ 4,99 – 4,81	60 × 90
1:2 (1/2×)	0,47	+ 3,85 – 3,71	48 × 72
1:1,5 (1/1,5×)	0,4	+ 2,74 – 2,64	36 × 54
1:1,2 (1/1,2×)	0,37	+ 2,07 – 1,99	28,8 × 43,2
1:1 (1×)	0,35	+ 1,63 – 1,56	24 × 36

• With 2x close-up attachment lens

Reproduction ratio	Focusing distance	Depth of field	Subject size
1:1,25 (0,8×)	0,33	+ 2,47 – 2,35	30 × 45
1:1,18 (0,85×)	0,325	+ 2,21 – 2,11	28,2 × 42,4
1:1,11 (0,9×)	0,32	+ 1,95 – 1,88	26,7 × 40
1:1,05 (0,95×)	0,315	+ 1,78 – 1,71	25,3 × 37,9
1:1 (1×)	0,31	+ 1,55 – 1,50	24 × 36
1,1:1 (1,1×)	0,30	+ 1,28 – 1,23	21,8 × 32,7
1,2:1 (1,2×)	0,29	+ 1,10 – 1,06	20 × 30
1,3:1 (1,3×)	0,285	+ 0,90 – 0,86	18,5 × 27,7
1,5:1 (1,5×)	0,275	+ 0,67 – 0,65	16 × 24
1,8:1 (1,8×)	0,27	+ 0,52 – 0,50	13,3 × 20
2:1 (2×)	0,26	+ 0,41 – 0,40	12 × 18

Notes:
+ denotes background
– denotes foreground
The focusing distance is always relative to the plane of the film

AF Nikkor Lenses for 35mm SLR Cameras

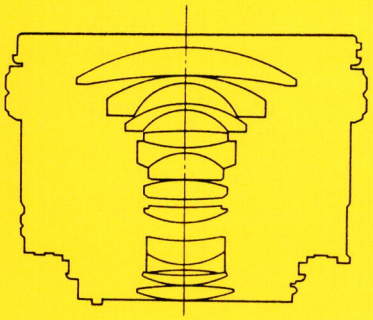

AF Nikkor 20mm f/2.8

Nikon Advanced Systems Dealer

Product number:	1912
Focal length:	20mm
Maximum aperture:	f/2.8
Picture angle:	94°
Optical construction:	12 elements in 9 groups
Minimum focusing distance:	0.25m (0.85 ft.)
Aperture range:	f/2.8-f/22; minimum aperture lock provided
Lens aperture:	Via automatic diaphragm
Filter size:	62mm diameter
Special characteristics:	Close-Range Correction (CRC) system; autofocus operation with Nikon N2020, N4004, N4004S, N8008 and F4S cameras; compatible with other Nikon SLR cameras in manual focus mode
Dimensions:	69mm dia. x 52mm (2.6″ x 2.1″)
Weight:	260g (9.2 oz.)
Optional accessories:	Lens Hood HB-4 Hard Lens Case CL-30S Soft Leather Lens Pouch #61 Plastic Lens Case CP-8 62-72mm Filter Adapter Ring UR-1 Miscellaneous 62mm Filters Miscellaneous 72mm Filters Gelatine Filter Holder AF-2
Usable teleconverters:	Autofocus Converter TC-16A 1.4x Teleconverter TC-14A 2x Teleconverter TC-201

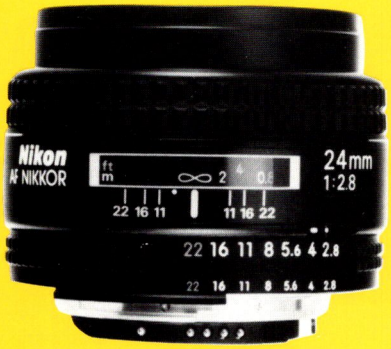

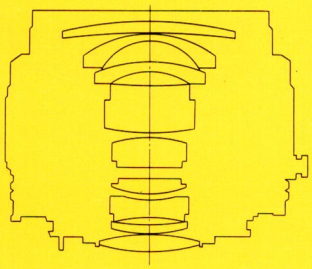

AF Nikkor 24mm f/2.8

Nikon CONSUMER PRODUCTS DEALER

Product number:	1915
Focal length:	24mm
Focus system:	Autofocus capable; manual focusing ring provided
Optical construction:	9 elements in 9 groups
Picture angle:	84 degrees
Aperture scale:	f/2.8 to f/22 on both standard and aperture-direct readout scales
Diaphragm:	Fully automatic
Central processing unit:	Built-in
Exposure measurement:	Via full aperture method with AI cameras or cameras with CPU interface system; via stop-down method with non-AI cameras; usable with programmed and shutter-priority auto-exposure modes.
Distance Scale:	Graduated in feet and meters from 0.3m (1 ft.) to infinity
Mount:	Nikon bayonet mount
Attachment size:	52mm (P=0.75mm)
Weight:	Approx. 260 grams
Dimensions:	Approx. 64.5mm dia. x 46mm extension from the camera's lens mounting flange; overall length is approx. 55.5mm

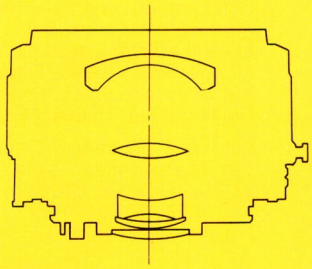

AF Nikkor 28mm f/2.8

Product number:	1917
Focal length:	28mm
Focus system:	Autofocus capable; manual focusing ring provided
Optical construction:	5 elements in 5 groups
Picture angle:	74 degrees
Distance scale:	Graduated in meters and feet from 0.3m (1 ft.) to infinity
Aperture scale:	f/2.8 to f/22 on both standard and aperture-direct readout scales
Diaphragm:	Fully automatic
Central processing unit:	Built-in
Exposure measurement:	Via full aperture method with AI cameras or cameras with CPU interface system; via stop-down method with non-AI cameras; usable with programmed and shutter-priority auto-exposure modes.
Mount:	Nikon bayonet mount
Attachment size:	52mm (P=0.75mm)
Weight:	Approx. 195 grams
Dimensions:	Approx. 64.5mm dia. x 39mm extension from the camera's lens mounting flange; overall length is approx. 48.5mm

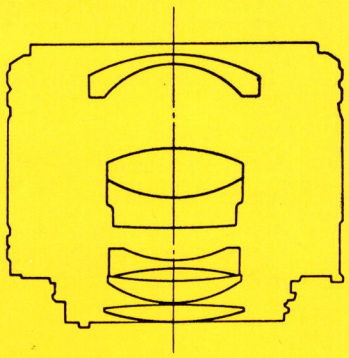

AF Nikkor 35mm f/2

Product number:	1920
Focal length:	35mm
Maximum aperture:	f/2
Picture angle:	62°
Optical construction:	6 elements in 5 groups
Minimum focusing distance:	0.25m (0.9 ft.)
Aperture range:	f/2-f/22; minimum aperture lock provided
Lens aperture:	Via automatic diaphragm
Filter size:	52mm diameter
Special characteristics:	Autofocus with Nikon N2020, N4004, N4004S, N8008 and F4S cameras; compatible with other Nikon SLR cameras in manual focus mode
Dimensions:	63mm dia. x 53mm (2.5″ x 2.1″)
Weight:	215g (7.5 oz.)
Optional accessories:	Lens Hood HN-3 Hard Lens Case CL-30S Soft Leather Lens Pouch #61 Plastic Lens Case CP-8 Miscellaneous 52mm Filters Gelatine Filter Holder AF-1
Usable teleconverters:	Autofocus Converter TC-16A 1.4x Teleconverter TC-14A 2x Teleconverter TC-201

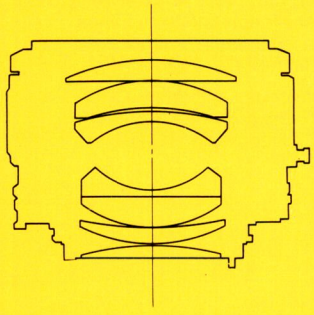

AF Nikkor 50mm f/1.4

Product number:	1904
Focal length:	50mm
Focus system:	Autofocus capable; manual focusing ring provided
Optical construction:	7 elements in 6 groups
Distance scale:	Graduated in meters and feet from 0.45m (1.5 ft.) to infinity
Picture angle:	46 degrees
Aperture scale:	f/1.4 to f/16 on both standard and aperture-direct readout scales
Diaphragm:	Fully automatic
Central processing unit:	Built-in
Exposure measurement:	Via full aperture method with AI cameras or cameras with CPU interface system; via stop-down method with non-AI cameras; usable with programmed and shutter-priority auto-exposure modes.
Mount:	Nikon bayonet mount
Attachment size:	52mm (P=0.75mm)
Weight:	Approx. 255 grams
Dimensions:	Approx. 64.5mm dia. x 42mm extension from the camera's lens mounting flange; overall length is approx. 52.5mm

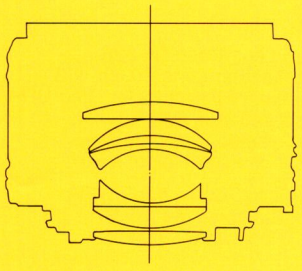

AF Nikkor 50mm f/1.8N

Product number	1906
Focal length:	50mm
Maximum aperture:	f/1.8
Picture angle:	46°
Optical construction:	6 elements in 5 groups
Minimum focusing distance:	0.45m (1.75 ft)
Aperture range:	f/1.8-f/22; minimum aperture lock provided
Lens aperture:	Via automatic diaphragm
Filter size:	52mm diameter
Special characteristics:	Autofocus with Nikon N2020, N4004, N4004S, N8008 and F4S cameras; compatible with other Nikon SLR cameras in manual focus mode
Dimensions:	63mm dia. x 48mm (2.3″ x 1.5″)
Weight:	155g (5.5 oz.)
Optional accessories:	Rubber Lens Hood HR-2 Hard Lens Case CL-30S Soft Leather Lens Pouch #61 Miscellaneous 52mm Filters Gelatine Filter Holder AF-1
Usable Teleconverters:	Autofocus Converter TC-16A 1.4x Teleconverter TC-14A 2x Teleconverter TC-201

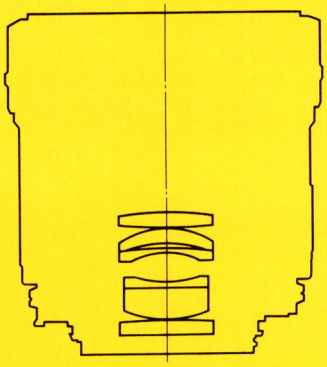

AF Micro-Nikkor 55mm f/2.8

Product number:	1990
Focal length:	55mm
Maximum aperture:	f/2.8
Picture angle:	43°
Optical construction:	6 elements in 5 groups
Minimum focusing distance:	0.299m (1 ft.); reproduction ratio of 1:1 provided
Aperture range:	f/2.8-f/32; minimum aperture lock provided
Lens aperture:	Via automatic diaphragm
Filter size:	62mm diameter
Special characteristics:	Autofocus with Nikon N2020, N4004, N4004S, N8008 and F4S cameras; compatible with other Nikon SLR cameras in manual focus mode
Dimensions:	74mm dia. x 82mm (2.7″ x 2.9″)
Weight:	420g (14 oz.)
Optional accessories:	Hard Lens Case CL-32S Soft Leather Lens Pouch #62 62-72mm Filter Adapter Ring UR-1 Miscellaneous 62mm Filters Miscellaneous 72mm Filters Gelatine Filter Holder AF-1
Usable teleconverters:	Autofocus Converter TC-16A 1.4x Teleconverter TC-14A 2x Teleconverter TC-201

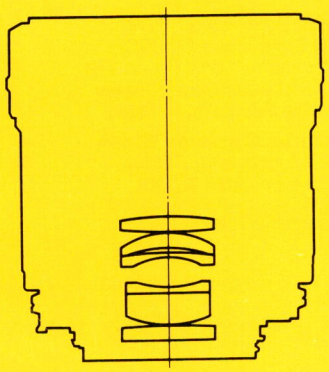

AF Micro-Nikkor 60mm f/2.8

Product number:	1991
Focal length:	60mm
Maximum aperture:	f/2.8
Picture angle:	39° 40′
Optical construction:	8 elements in 7 groups
Minimum focusing distance:	0.219m (8.75 in.); reproduction ratio of 1:1 provided
Aperture range:	f/2.8-f/32; minimum aperture lock provided
Lens aperture:	Via automatic diaphragm
Filter size:	62mm diameter
Special characteristics:	Autofocus with Nikon N2020, N4004, N4004S, N8008 and F4S cameras; compatible with other Nikon SLR cameras in manual focus mode
Dimensions:	70mm dia. x 82mm (2.5″ x 2.9″)
Weight:	455g (16 oz.)
Optional accessories:	Hard Lens Case CL-32S Soft Leather Lens Pouch #62 62-72mm Filter Adapter Ring UR-1 Miscellaneous 62mm Filters Miscellaneous 72mm Filters Gelatine Filter Holder AF-1
Usable teleconverters:	Autofocus Converter TC-16A 1.4x Teleconverter TC-14A 2x Teleconverter TC-201

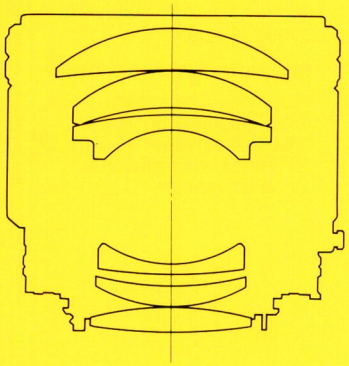

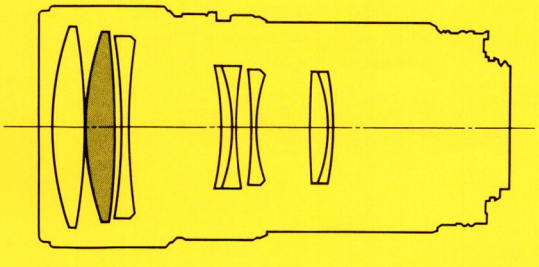

AF Nikkor 85mm f/1.8

Product number:	1930
Focal length:	85mm
Maximum aperture:	f/1.8
Picture angle:	28° 30′
Optical construction:	6 elements in 6 groups
Minimum focus distance:	0.85m (3 ft.)
Aperture range:	f/1.8-f/16; minimum aperture lock provided
Lens aperture:	Via automatic diaphragm
Filter size:	62mm diameter
Lens hood:	Supplied (HN-23)
Special characteristics:	Autofocus with Nikon N2020, N4004, N4004S, N8008 and F4S cameras; compatible with other Nikon SLR cameras in manual focus mode
Dimensions:	71mm dia. x 69mm (2.8″ x 2.7″)
Weight:	415g (14.6 oz.)
Optional accessories:	Hard Lens Case CL-15S Soft Leather Lens Pouch #62 Plastic Lens Case CP-9 62-72mm Filter Adapter Ring UR-1 Miscellaneous 62mm Filters Miscellaneous 72mm Filters Gelatine Filter Holder AF-2
Usable teleconverters:	Autofocus Converter TC-16A 1.4x Teleconverter TC-14A 2x Teleconverter TC-201

See Page 75 for information on the New 105mm f/2.8 AF Micro-Nikkor Lens

AF Nikkor 180mm f/2.8N ED IF

Product number:	1938
Focal length:	180mm
Maximum aperture:	f/2.8
Picture angle:	13° 40′
Optical construction:	8 elements in 6 groups
Minimum focusing distance:	1.5m (5 ft.)
Aperture range:	f/2.8-f/22; minimum aperture lock provided
Lens aperture:	Via automatic diaphragm
Filter size:	72mm diameter
Special characteristics:	Autofocus with Nikon N2020, N4004, N4004S, N8008 and F4S cameras; compatible with other Nikon SLR cameras in manual focus mode
Lens hood:	Nikon built-in
Lens case:	Supplied (CL-38)
Dimensions:	78.5mm dia. x 153mm (3.1″ x 5.6″)
Weight:	750g (25.2 oz.)
Optional accessories:	Miscellaneous 72mm Filters Gelatine Filter Holder AF-2
Usable teleconverters:	Autofocus Converter TC-16A 1.4x Teleconverter TC-14A 2x Teleconverter TC-201

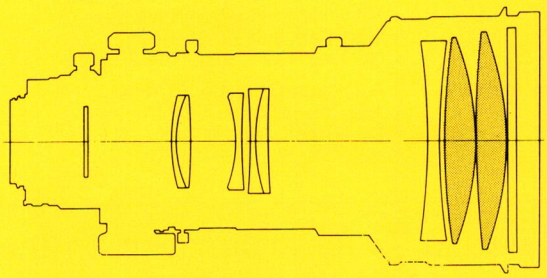

AF Nikkor ED 300mm f/2.8N

Product number:	1944
Focal length:	300mm
Maximum aperture:	f/2.8
Picture angle:	8° 10′
Optical construction:	8 elements in 6 groups
Minimum focusing distance:	3m (10 ft.)
Aperture range:	f/2.8-f/22; minimum aperture lock provided
Lens aperture:	Via automatic diaphragm
Filter size:	39mm filter via slip-in holder; gelatine filter via special slip-in holder provided; front end of lens has built-in protective glass
Lens hood:	Built-in, with Extension Lens Hood HE-6 provided
Tripod mount:	Via built-in, rotatable tripod collar
Lens case:	Supplied (CT-303)
Special characteristics:	Autofocus with Nikon N2020, N4004, N4004S, N8008 and F4S cameras; compatible with other Nikon SLR cameras in manual focus mode
Dimensions:	133mm dia. x 263mm (5.4″ x 9.8″)
Weight:	2700g (89 oz.)
Optional accessories:	Miscellaneous 39mm Filters
Usable teleconverters:	Autofocus Converter TC-16A 1.4x Teleconverter TC-14A 1.4x Teleconverter TC-14B 2x Teleconverter TC-201 2x Teleconverter TC-301

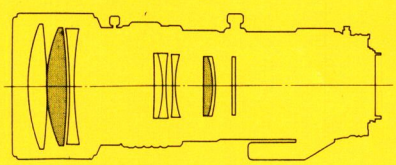

AF Nikkor ED 300mm f/4 IF

Product number:	1946
Focal length:	300mm
Maximum aperture:	f/4
Picture angle:	8° 10′
Optical construction:	8 elements in 6 groups
Minimum focusing distance:	2.5m (9 ft.)
Aperture range:	f/4-f/32; minimum aperture lock provided
Lens aperture:	Via automatic diaphragm
Filter size:	39mm filters via slip-in holder; gelatine filters via special slip-in holder provided; 82mm via thread mount at front end of lens
Lens hood:	Built-in
Tripod mount:	Via built-in, rotatable tripod collar
Lens case:	Supplied (CL-42)
Special characteristics:	Autofocus with Nikon N2020, N4004, N4004S, N8008 and F4S cameras; compatible with other Nikon SLR cameras in manual focus mode
Dimensions:	89mm dia. x 227mm (4.1″ x 10.5″)
Weight:	1330g (46.6 oz.)
Optional accessories:	Miscellaneous 39mm Filters Miscellaneous 82mm Filters
Usable teleconverters:	1.4x Teleconverter TC-14A 2x Teleconverter TC-201 2x Teleconverter TC-301

AF DC-Nikkor 135mm f/2.0

Nikon Advanced Systems Dealer

The 135mm f/2.0 AF DC-Nikkor introduced a brand-new category of lens. With the special Defocus Control, the photographer can selectively vary the out-of-focus effect for either the foreground or the background of a picture, without changing the aperture or the depth-of-field.

Combined with the benefits of the maximum f/2.0 aperture and relatively long focal length lens, this feature is particularly useful for portraiture or any other photography where depth-of-field normally plays an important role.

Special Features

- Foreground or background "out-of-focus" effect can be varied by adjusting the Defocus Control ring
- Rear Focusing mechanism provides highly consistent performance throughout the focusing range; focusing movement is internal and lens does not extend or change size when focused
- Lens hood is built-in
- The lens diaphragm uses nine blades for rounder, softer effect at all f/stops

DC Ring set at F (front) position

DC Ring set at central neutral position

DC Ring set at R (rear) position

Specifications:

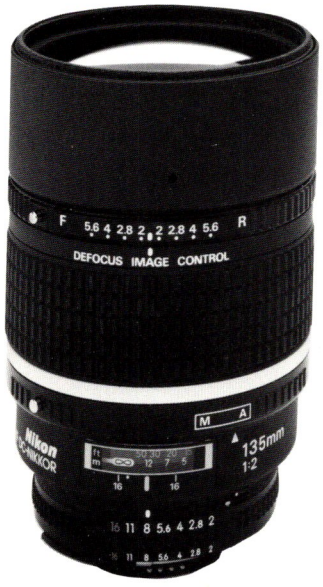

Product number:	1934
Focal length:	135mm
Maximum aperture:	f/2
Lens construction:	7 elements in 6 groups (plus built-in dustproof glass front plate)
Picture angle:	18°
Distance scale:	Graduated in meters and feet/inches from 1.1m (4 feet) to infinity (∞)
Aperture scale:	f/2 to f/16 on both standard and aperture-direct-readout scales
Minimum aperture lock:	Provided
Diaphragm:	Fully automatic
Focusing:	Nikon Rear Focusing (RF) system
Exposure measurement:	Via full-aperture method for AI cameras or cameras with CPU interface system; via stop-down method for other cameras
Mount:	Nikon bayonet mount
Attachment size:	72mm (P–0.75mm)
Dimensions:	Approx. 79mm dia. x 120mm extension from the camera's lens mounting flange; overall length is approx. 128mm
Weight:	Approx. 870g

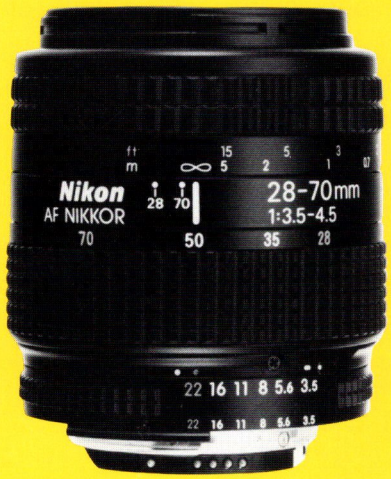

AF Zoom-Nikkor 28-70mm f/3.5-4.5

Product number:	1957
Focal length:	28mm to 70mm
Apeture range:	Variable maximum aperture from f/3.5 to f/4.5
Focus system:	Autofocus capable; manual focusing ring provided
Optical construction:	8 elements in 7 groups
Picture angle:	74 degrees to 34 degrees 20 minutes
Distance scale:	Graduated in meters and feet from 0.5m (2 ft.) to infinity; M and orange line for macro focus is also graduated from 0.5m (2 ft.) to 0.39m
Focal length scale:	28mm, 35mm, 50mm and 70mm
Zoom control:	Via zoom ring
Focus control:	Via focus ring
Macro focusing function:	Operable at any focal length setting; maximum reproduction ratio is 1:4.6 at 70mm focal length setting
Aperture scale:	f/3.5, 5.6, 8, 11, 16 and 22 on both standard and aperture-direct-readout scales; at f/4 there is a click stop, but no mark
Minimum aperture lock:	Provided by minimum aperture lock lever
Infrared compensation index:	Two white dots are provided for the 28mm and 70mm focal length settings
Diaphragm:	Fully automatic
Central processing unit:	Built-in
Exposure measurement:	Via full aperture method with AI cameras or cameras with CPU interface system; via stop-down method with non-AI cameras; usable with programmed and shutter-priority auto-exposure modes.
Mount:	Nikon bayonet mount
Attachment size:	52mm (P=0.75mm)
Weight:	350 grams
Dimensions:	Approx. 67.5mm dia. x 71mm extension from the camera's lens mounting flange; overall length is approx. 79mm

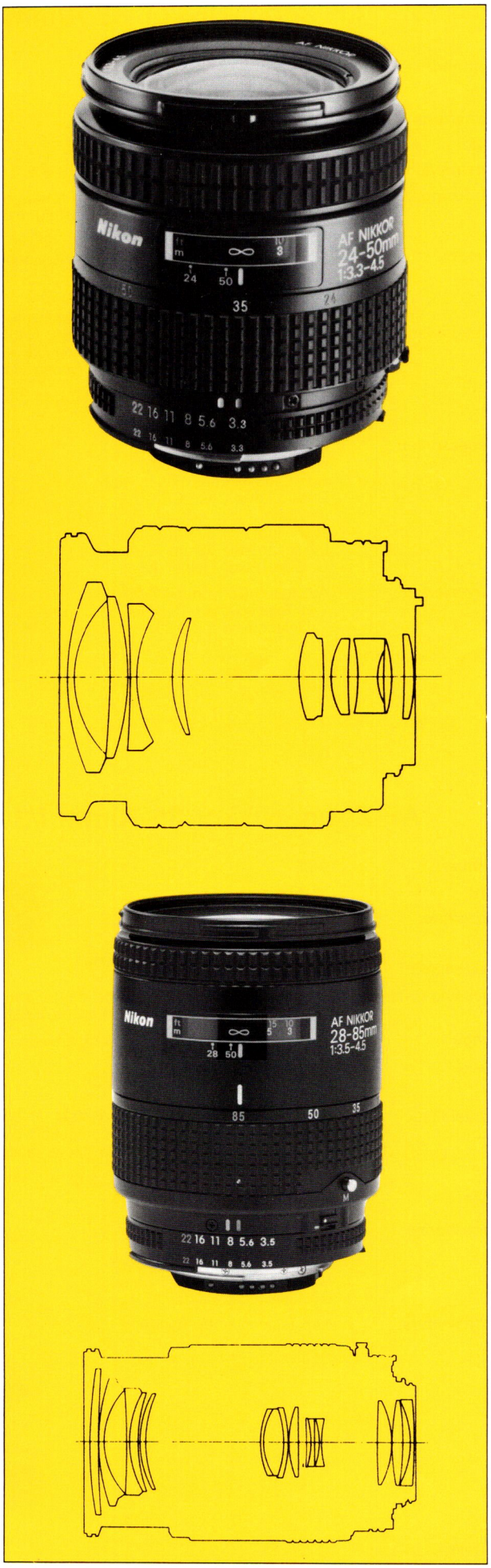

AF Zoom-Nikkor 24-50mm f/3.3-4.5

Product number:	1954
Focal length:	24-50mm
Maximum aperture:	f/3.3-4.5
Picture angle:	84°-46°
Optical construction:	9 elements in 9 groups
Minimum focusing distance:	0.6m (2 ft.) as normal; 0.5m (1.6 ft.) via macro range; macro range usable at all focal length settings; maximum reproduction ratio of 1:8.5 possible (50mm zoom setting)
Aperture range:	f/3.3-f/22; minimum aperture lock provided
Lens aperture:	Via automatic diaphragm
Filter size:	62mm diameter
Special characteristics:	Autofocus with Nikon N2020, N4004, N4004S, N8008(s) and F4S cameras; compatible with other Nikon SLR cameras in manual focus mode
Dimensions:	70.5mm dia. x 82.5mm (2.8″ x 3.2″)
Weight:	375g (13.2 oz.)
Optional accessories:	Lens Hood HB-3 Hard Lens Case CL-32S Soft Leather Lens Pouch #62 Plastic Lens Case CP-9 62-72mm Filter Adapter Ringe UR-1 Miscellaneous 62mm Filters Miscellaneous 72mm Filters Gelatine Filter Holder AF-2
Usable teleconverters:	1.4x Teleconverter TC-14A 2x Teleconverter TC-201

AF Zoom-Nikkor 28-85mm f/3.5-4.5

Product number	1959
Focal length:	28-85mm
Maximum aperture:	f/3.5-4.5
Picture angle:	74°-28° 30′
Optical construction:	15 elements in 11 groups
Minimum focusing distance:	0.8m (3 ft.) as normal; 0.23m (0.9 ft.) via macro setting; reproduction ratio of 1:3.4 provided
Aperture range:	f/3.5-f/22; minimum aperture lock provided
Lens aperture:	Via automatic diaphragm
Filter size:	62mm diameter
Special characteristics:	Autofocus with Nikon N2020, N6006, N6000, N4004, N4004S, N8008(s) and F4S cameras; compatible with other Nikon SLR cameras in manual focus mode
Dimensions:	71mm dia. x 97.5mm (2.8″ x 3.5″)
Weight:	540g (18.9 oz.)
Optional accessories:	Lens Hood HB-1 Hard Lens Case CL-33S Soft Leather Lens Pouch #62 62-72mm Filter Adapter Ringe UR-1 Miscellaneous 62mm Filters Miscellaneous 72mm Filters Gelatine Filter Holder AF-2
Usable Teleconverters:	1.4x Teleconverter TC-14A 2x Teleconverter TC-201

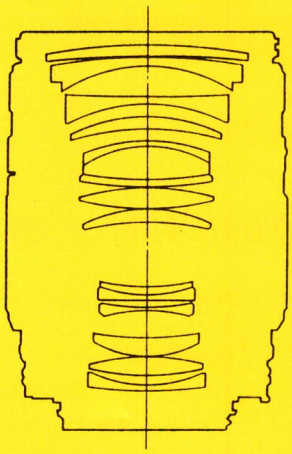

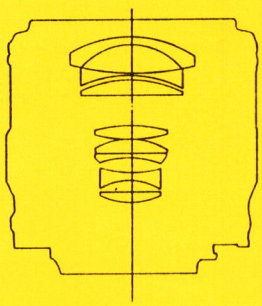

AF Zoom-Nikkor 35-70mm f/2.8

Product number:	1962
Focal length:	35-70mm
Maximum aperture:	f/2.8
Picture angle:	62°-34° 20′
Optical construction:	15 elements in 12 groups
Minimum focusing distance:	0.6m (2 ft.) as normal; 0.28m (0.9 ft.) via macro mode at 35mm zoom setting; maximum reproduction ratio of 1:4 possible in macro mode
Aperture range:	f/2.8-f/22; minimum aperture lock provided
Lens aperture:	Via automatic diaphragm
Filter size:	62mm diameter
Special characteristics:	Autofocus with Nikon N2020, N4004, N4004S, N8008(s) and F4S cameras; compatible with other Nikon SLR cameras in manual focus mode
Dimensions:	71.5mm dia. x 105mm (2.8″ x 3.7″)
Weight:	665g (23.5 oz.)
Optional accessories:	Lens Hood HB-1 Hard Lens Case CL-33S Soft Leather Lens Pouch #62 Plastic Lens Case CP-9 62-72mm Filter Adapter Ring UR-1 Miscellaneous 62mm Filters Miscellaneous 72mm Filters Gelatine Filter Holder AF-2
Usable teleconverters:	Autofocus Converter TC-16A 1.4x Teleconverter TC-14A 2x Teleconverter TC-201

AF Zoom-Nikkor 35-70mm f/3.3-4.5

Product number:	1965
Focal length:	35-70mm
Maximum aperture:	f/3.3-f/4.5
Picture angle:	62°-34° 20′
Optical construction:	8 elements in 7 groups
Minimum focusing distance:	0.5m (1.5 ft.) as normal; 0.35m (1 ft.) via macro setting; reproduction ratio of 1:44 provided
Aperture range:	f/3.3-f/22; minimum aperture lock provided
Lens aperture:	Via automatic diaphragm
Filter size:	52mm diameter
Special characteristics:	Autofocus with Nikon N2020, N4004, N4004S, N8008(s) and F4S cameras; compatible with other Nikon SLR cameras in manual focus mode
Dimensions:	66.5mm dia. x 57mm (approx. 2.6″ x 2.5″)
Weight:	240g (8.5 oz.)
Optional accessories:	Lens Hood HN-2 Hard Lens Case CL-31S Soft Leather Lens Pouch #61 Miscellaneous 52mm Filters Gelatine Filter Holder AF-1
Usable teleconverters:	1.4x Teleconverter TC-14A 2x Teleconverter TC-201

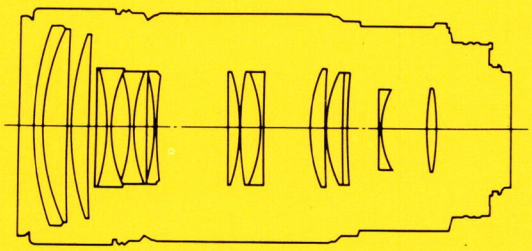

AF Zoom-Nikkor ED 80-200mm f/2.8

Product number:	1984
Focal length:	80-200mm
Maximum aperture:	f/2.8
Picture angle:	30° 10′-12° 20′
Optical construction:	16 elements in 11 groups
Minimum focusing distance:	1.8m (6 ft.) as normal; 1.5m (4.9 ft.) via macro range; macro range usable at all focal length settings; maximum reproduction ratio of 1:5.9 possible (200m zoom setting)
Aperture range:	f/2.8-f/22; minimum aperture lock provided
Lens aperture:	Via automatic diaphragm
Filter size:	77mm diameter
Lens case:	Supplied (CL-43)
Special characteristics:	Autofocus with Nikon N2020, N4004, N4004S, N8008 and F4S cameras; compatible with other Nikon SLR cameras in manual focus mode
Dimensions:	85.5mm dia. x 184.5mm (3.4″ x 7.3″)
Weight:	1200g (42.3 oz.)
Optional accessories:	Lens Hood HN-28 77mm UV Haze (L-37C) Filter
Usable teleconverters:	Autofocus Converter TC-16A 1.4x Teleconverter TC-14A 1.4x Teleconverter TC-14B 2x Teleconverter TC-201

AF Micro-Nikkor 105mm f/2.8

Product number:	1992
Focal length:	105mm
Maximum aperture:	f/2.8
Picture angle:	39°-40′
Optical constructon:	9 elements in 8 groups
Minimum focusing distance:	0.314m (1.2 ft.)
Aperature range:	f/2.8-f/3.2
Filter size:	52mm
Dimensions:	75mm x 104.5mm
Weight:	565g (21.3 oz)
Optional accessories:	Lens Hood HS-7 Lens Case CL-15S
Usable teleconverters:	Autofocus Converter TC-16A 1.4x Teleconverter TC-14A 2x Teleconverter 201

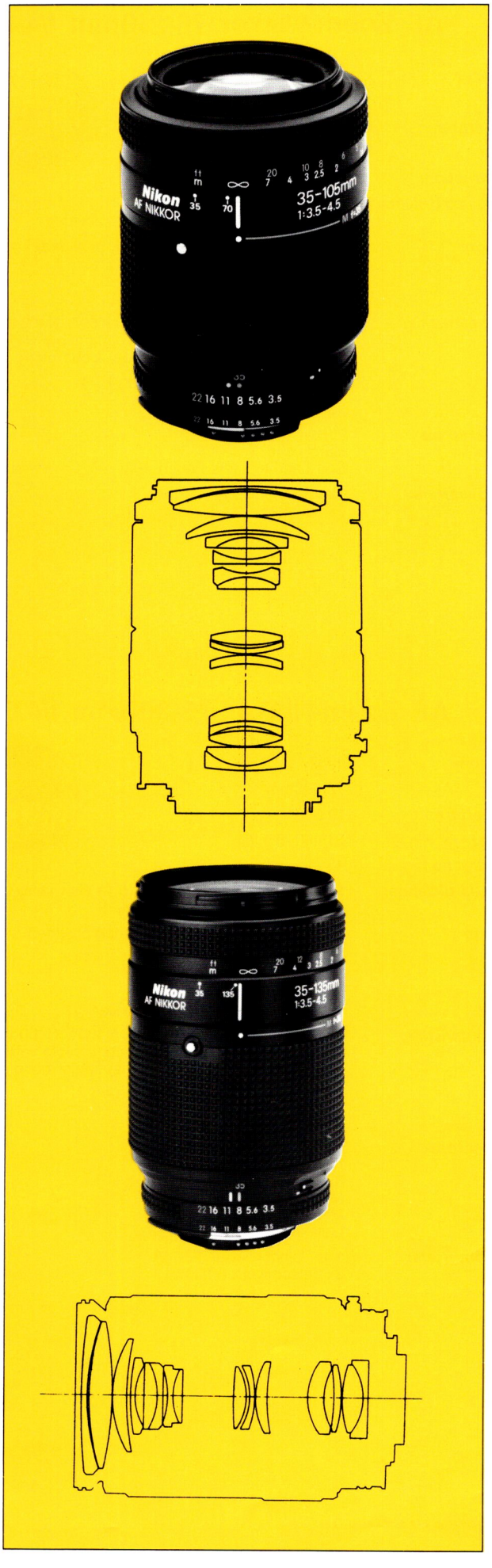

AF Zoom-Nikkor 35-105mm f/3.5-4.5

Product number:	1967
Focal length:	35 to 105mm
Maximum aperture:	f/3.5 to f/4.5
Lens construction:	16 elements in 12 groups
Picture angle:	62° to 23° 20′
Focal length scale:	35mm, 50mm, 70mm and 105mm
Distance scale:	Graduated in meters and feet from 1.4m (4.6 ft.) to infinity (∞); M and orange line for macro focus is also graduated from 1.4m (4.6 ft.) to 0.28m (0.9 ft.)
Focus/zoom control:	Via two independent control rings
Aperture scale:	f/3.5 to f/22 on both standard and aperture-direct-readout scales; at f/4 there is a click stop, but no mark.
Macro focusing function:	Push macro button while turning the zoom ring from the 35mm setting; maximum reproduction ratio is 1:4
Minimum aperture lock:	Provided
Infrared compensation indexes:	Two white dots are provided for the 35mm and 70mm focal length settings.
Diaphragm:	Fully automatic
Exposure measurement:	Via full-aperture method with AI cameras or cameras with CPU interface system; via stop-down method with other cameras
Mount:	Nikon bayonet mount
Attachment size:	52mm (P=0.75mm)
Dimensions:	Approx. 70mm dia. x 87mm extension from the camera's lens mounting flange; overall length is approx. 95.5mm
Weight:	Approx. 510g (18 oz.)
Optional accessories:	52mm screw-in filters Bayonet hood HB-5 Flexible lens pouch No. 62 Hard lens case CL-33S
Usable teleconverters:	Teleconverter TC-201 Teleconverter TC-14A

AF Zoom-Nikkor 35-135mm f/3.5-4.5N

Product number	1969
Focal length:	35-135mm
Maximum aperture:	f/3.5-4.5
Picture angle:	62°-18°
Optical construction:	15 elements in 12 groups
Minimum focusing distance:	1.5m (5 ft.) as normal; 0.3m (1.2 ft.) via macro setting; reproduction ratio of 1:35 provided
Aperture range:	f/3.5-F/22; minimum aperture lock provided
Lens aperture:	Via automatic diaphragm
Filter size:	62mm diameter
Special characteristics:	Autofocus with Nikon N2020, N6006, N6000, N4004, N4004S, N8008(s) and F4S cameras; compatible with other Nikon SLR cameras in manual focus mode
Dimensions:	72.5mm dia. x 117mm (2.7″ x 4.4″) approx.
Weight:	685g (23 oz.)
Optional accessories:	Lens Hood HB-1 Hard Lens Case CL-41 Soft Leather Lens Pouch #63 62-72mm Filter Adapter Ring UR-1 Miscellaneous 62mm Filters Miscellaneous 72mm Filters Gelatine Filter Holder AF-2
Usable Teleconverters:	1.4x Teleconverter TC-14A 2x Teleconverter TC-201

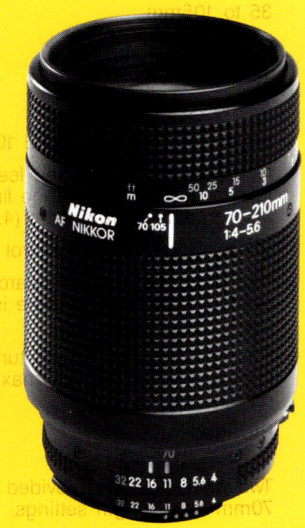

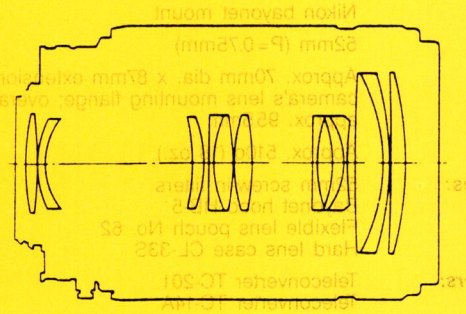

AF Zoom-Nikkor 70-210mm f/4-f/5.6

Product number	1981
Focal length:	70-210mm
Maximum aperture:	f/4-5.6
Picture angle:	34°-20′-11° 50′
Optical construction:	12 elements in 9 groups
Minimum focusing distance:	1.5m (5 ft.) as normal; 1.2m (4 ft.) via macro setting; reproduction ratio of 1:4.5 provided
Aperture range:	f/4-f/32; minimum aperture lock provided
Lens aperture:	Via automatic diaphragm
Filter size:	62mm diameter
Special characteristics:	Autofocus with Nikon N2020, N4004, N4004S, N8008(s) and F4S cameras; compatible with other Nikon SLR cameras in manual focus mode
Dimensions:	73.5mm dia. x 116mm (2.8″ x 4.5″)
Weight:	590g (20.6 oz.)
Optional accessories:	Lens Hood HN-24 Hard Lens Case CL-38 Soft Leather Lens Pouch #63
Usable teleconverters:	1.4x Teleconverter TC-14A 2x Teleconverter TC-201

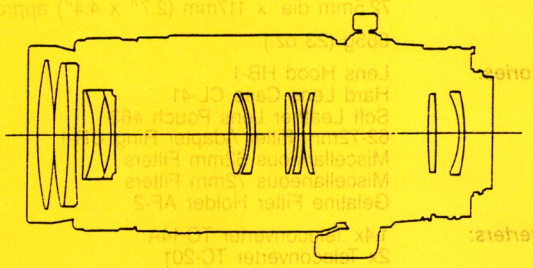

AF Zoom-Nikkor 75-300mm f/4.5-5.6

Product number:	1982
Focal length:	75-300mm
Maximum aperture:	f/4.5-5.6
Picture angle:	31° 40′-8° 10′
Optical construction:	13 elements in 11 groups
Minimum focus distance:	3m (10 ft.) as normal; 1.5m (5 ft) via macro setting; reproduction ratio 1:3.8 provided
Aperture range:	f/4.5-f/32; minimum aperture lock provided
Lens aperture:	Via automatic diaphragm
Filter size:	62mm
Tripod mount:	Via built-in, rotatable tripod collar
Special characteristics:	Autofocus with Nikon N2020, N4004, N4004S, N8008(s) and F4S cameras; compatible with other Nikon SLR cameras in manual focus mode
Dimensions:	72mm dia. x 174mm (2.6″ x 6.8″)
Weight:	850g (30 oz.)
Optional accessories:	Lens Hood HN-24 Hard Lens Case CL-35A 62-72mm Filter Adaptor Ring UR-1 Miscellaneous 62mm filter Miscellaneous 72mm filter Gelatine filter holder AF-2
Usable teleconverters:	1.4x Teleconverter TC-14A 2x Teleconverter TC-201

Teleconverters & Extension Tubes

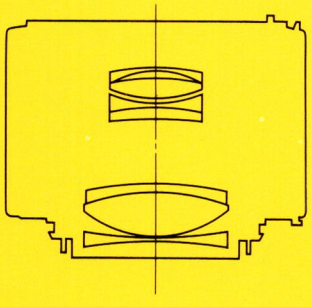

2X Teleconverter TC-201

Product Number:	1403
Focal length:	Double that of the mounted prime lens
Optical construction:	7 elements in 5 groups
Aperture coupling range:	f/2 — f/32
Effective aperture range:	f/4 to f/64
Diaphragm coupling:	Via built-in automatic mechanism
Reproduction ratio:	Double that of the mounted prime lens
Depth of field:	Half that of the mounted prime lens
Closest focusing distance:	Same as that of mounted prime lens
Extension from flange:	44m (1.8″)
Dimensions:	64.5mm dia. x 51.4mm (2.5″ x 2.0″)
Weight:	230g (8.1 oz.)
	Information on the use of the TC-201 is given in the Table of Nikkor Lenses (see pages 43/44).
Optional Accessories:	Hard Lens Case CL-30S Soft Leather Lens Pouch #61

2X Teleconverter TC-301

Product Number:	1404
Focal length:	Double that of the mounted prime lens
Optical construction:	5 elements in 5 groups
Aperture coupling range:	f/2.8 to f/32
Effective aperture range:	f/5.6—f/64
Diaphragm coupling:	Via built-in automatic mechanism
Reproduction ratio:	Double that of mounted the prime lens
Depth of field:	Half that of the mounted prime lens
Closest focusing distance:	Same as that of mounted prime lens
Extension from flange:	Mount-to-mount length 22mm (0.9″)
Dimensions:	64.5mm dia. x 115mm (2.5″ x 4.5″)
Weight:	300g (9.9 oz.)
	Information on the use of the TC-301 is given in the Table of Nikkor Lenses (see pages 43/44).
Optional Accessories:	Hard Lens Case CL-33S Soft Leather Lens Pouch #62

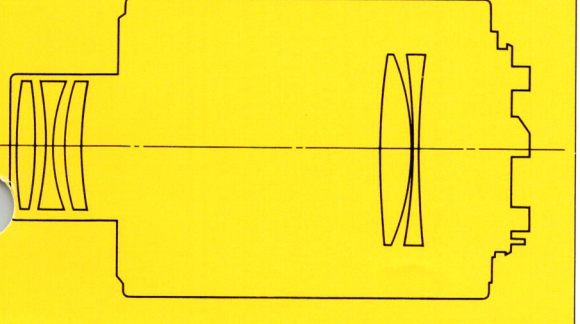

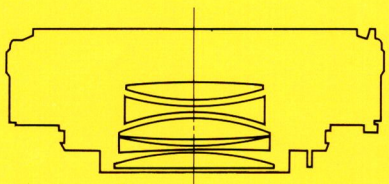

1.4X Teleconverter TC-14A

Product Number:	1400
Focal length:	1.4x that of the mounted prime lens
Optical construction:	5 elements in 5 groups
Aperture coupling range:	1.8 to f/32
Effective aperture range:	f/2.8—f/45
Diaphragm coupling:	Via built-in automatic mechanism
Reproduction ratio:	1.4x that of mounted prime lens
Depth of field:	About 70% that of mounted prime lens
Closest focusing distance:	Same as that of mounted prime lens
Extension from flange:	Mount-to-mount length 22mm (0.9″)
Dimensions:	65mm dia. x 25.5mm (2.6″ x 1.0″)
Weight:	145g (5.1 oz.)
	Information on the use of the TC-14A is given in the Table of Nikkor Lenses (see pages 16/17).
Optional Accessories:	Hard Lens Case CL-30S Soft Leather Lens Pouch #61

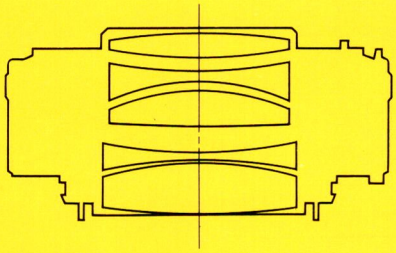

1.4X Teleconverter TC-14B

Product Number:	1401
Focal length:	1.4x that of the mounted prime lens
Optical construction:	5 elements in 5 groups
Aperture coupling range:	f/2 to f/45
Effective aperture range:	f/2.8 to f/45
Diaphragm coupling:	Via built-in automatic mechanism
Reproduction ratio:	1.4X that of mounted prime lens
Depth of field:	About 70% that of mounted prime lens
Closest focusing distance:	Same as that of mounted prime lens
Extension from flange:	22m (0.9″)
Dimensions:	65mm dia. x 34mm (2.6″ x 1.3″)
Weight:	165g (5.8 oz.)
	Information on the use of the TC-14B is given in the Table of Nikkor Lenses (see pages 16/17).
Optional Accessories:	Hard Lens Case CL-30S Soft Leather Lens Pouch #61

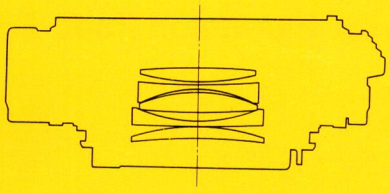

Autofocus Converter TC-16A

Product Number:	1999
Focal length:	1.6x that of the mounted prime lens
Optical construction:	5 elements in 5 groups
Aperture coupling range:	f/1.8 — f/32
Effective aperture range:	f/2.9 to f/51
Diaphragm coupling:	Via built-in automatic mechanism
Special characteristic:	Provides autofocus operation of Nikkor lenses with f/2.8 and brighter maximum aperture and N2020 camera.
Focusing drive:	Via focus drive motor in N2020, N4004
Dimensions:	69mm dia. x 30mm (2.7″ x 1.2″)
Weight:	150g (5.0 oz.)
Optional Accessories:	Soft Leather Lens Pouch #61

Nikon CONSUMER PRODUCTS DEALER

DISCONTINUED!

Extension Tubes

Auto Extension Tube PN-11

Product number:	2647
Extension from flange:	52.5mm; provides reproduction ratio of approximately 1:1 with both Micro-Nikkor 105mm f/2.8 and UV-Nikkor 105mm f/4.5 lenses
Dimensions:	70.5mm dia. x 67mm (2.8 x 2.7″)
Weight:	245g (8.6 oz.)
Tripod mount:	Via built-in, rotatable tripod collar
Optional accessories:	Body Cap BF-1A Rear Lens Cap LF-1 Soft Leather Lens Pouch #61

Nikon CONSUMER PRODUCTS DEALER

Auto Extension Tube PK-11A

Product number	2656
Extension from flange::	8mm
Dimensions:	64.4mm dia. x 17.0mm
Weight:	50g
Note:	Cannot be used in conjunction with AF Nikkor Lenses

Auto Extension Tube PK-12

Product number	2652
Extension from flange::	14mm
Dimensions:	64.4mm dia. x 23.0mm
Weight:	75g
Note:	Cannot be used in conjunction with AF Nikkor lenses

Auto Extension Tube PK-13

Product number:	2653
Extension from flange:	27.5mm; provides reproduction ratio of 1:1 with Micro-Nikkor 55mm f/2.8 lens
Dimensions:	64.4mm dia. x 30.5mm (2.7″ x 1.3″)
Weight:	100g (3.5 oz.)
Optional accessories:	Body Cap BF-1A Rear Lens Cap LF-1 Hard Lens Case CL-30S Soft Leather Lens Pouch #61

Depth-of-Field Tables

Depth-of-field Tables (Wide-angle Lenses)

Nikkor 13mm f/5.6

Nikon Advanced Systems Dealer

Focusing distance	Depth of Field								Reproduction ratio
				f/5.6	f/8	f/11	f/16	f/22	
0,3				0,284–0,322	0,278–0,334	0,271–0,353	0,262–0,394	0,253–0,478	
0,35				0,320–0,395	0,310–0,422	0,300–0,467	0,285–0,592	0,272–1,04	
0,4				0,354–0,478	0,339–0,531	0,324–0,629	0,304–1,02	0,286–∞	
0,5				0,413–0,686	0,388–0,851	0,364–1,31	0,333–∞	0,308–∞	
0,8				0,546–2,14	0,490–23,9	0,441–∞	0,385–∞	0,343–∞	
1,5				0,720–∞	0,610–∞	0,521–∞	0,484–∞	0,373–∞	
∞				1,11–∞	0,830–∞	0,651–∞	0,501–∞	0,411–∞	

Nikkor 15mm f/3.5

Nikon Advanced Systems Dealer

Focusing distance	Depth of Field								Reproduction ratio
		f/3.5	f/4	f/5.6	f/8	f/11	f/16	f/22	
0,3		0,280–0,325	0,278–0,329	0,270–0,343	0,260–0,367	0,248–0,405	0,233–0,499	0,218–0,732	1/13,2
0,4		0,359–0,457	0,354–0,467	0,339–0,503	0,320–0,571	0,299–0,699	0,272–1,19	0,249–40,0	1/19,8
0,5		0,431–0,606	0,423–0,626	0,399–0,701	0,370–0,864	0,341–1,26	0,303–7,93	0,271–∞	1/26,3
0,7		0,558–0,967	0,543–1,03	0,501–1,28	0,451–2,11	0,404–16,7	0,348–∞	0,302–∞	1/39,3
1		0,717–1,76	0,691–1,98	0,619–3,42	0,539–∞	0,468–∞	0,389–∞	0,330–∞	1/58,9
2		1,07–38,4	1,01–∞	0,851–∞	0,696–∞	0,573–∞	0,452–∞	0,369–∞	1/124
∞		2,12–∞	1,86–∞	1,36–∞	0,979–∞	0,738–∞	0,538–∞	0,417–∞	1/∞

Nikkor 18mm f/3.5

Nikon Advanced Systems Dealer

Focusing distance	Depth of Field								Reproduction ratio
		f/3.5	f/4	f/5.6	f/8	f/11	f/16	f/22	
0,25		0,243–0,257	0,243–0,258	0,240–0,262	0,236–0,267	0,231–0,275	0,224–0,289	0,216–0,309	1/8,51
0,30		0,288–0,313	0,287–0,315	0,282–0,322	0,275–0,333	0,267–0,349	0,255–0,380	0,243–0,428	1/11,3
0,40		0,373–0,432	0,370–0,438	0,359–0,455	0,345–0,486	0,329–0,531	0,307–0,637	0,285–0,858	1/16,7
0,50		0,453–0,561	0,447–0,571	0,430–0,607	0,407–0,671	0,382–0,780	0,348–1,09	0,317–2,28	1/22,1
0,70		0,599–0,850	0,588–0,878	0,554–0,982	0,510–1,20	0,467–1,70	0,411–6,52	0,363–∞	1/33,0
1		0,790–1,39	0,767–1,48	0,705–1,84	0,630–3,00	0,558–16,9	0,474–∞	0,406–∞	1/49,3
2		1,25–5,45	1,19–7,32	1,03–∞	0,860–∞	0,720–∞	0,580–∞	0,470–∞	1/104
∞		3–∞	3–∞	2–∞	1–∞	1–∞	1–∞	1–∞	1/∞

Nikkor 20mm f/2.8

Nikon Advanced Systems Dealer

Focusing distance	Depth of Field								Reproduction ratio
		f/2.8	f/4	f/5.6	f/8	f/11	f/16	f/22	
0,25		0,244–0,256	0,242–0,259	0,239–0,262	0,235–0,268	0,230–0,276	0,222–0,291	0,214–0,312	1/8,4
0,3		0,290–0,311	0,287–0,315	0,282–0,322	0,275–0,333	0,267–0,348	0,254–0,377	0,242–0,422	1/10,9
0,4		0,380–0,423	0,372–0,435	0,362–0,451	0,348–0,477	0,332–0,517	0,310–0,604	0,288–0,768	1/15,8
0,5		0,465–0,542	0,452–0,563	0,435–0,593	0,413–0,647	0,389–0,732	0,356–0,954	0,325–1,533	1/20,7
0,7		0,626–0,797	0,599–0,849	0,567–0,931	0,526–1,093	0,484–1,407	0,428–2,824	0,379–∞	1/30,6
1		0,844–1,23	0,793–1,38	0,734–1,63	0,661–2,27	0,591–4,61	0,505–∞	0,433–∞	1/45,3
2		1,42–3,44	1,27–5,02	1,11–13,35	0,94–∞	0,79–∞	0,64–∞	0,52–∞	1/94,4
∞		5–∞	3,2–∞	2,3–∞	1,6–∞	1,2–∞	0,9–∞	0,6–∞	1/∞

(Units = Meters)

Nikkor 24mm f/2

Focusing distance	Depth of Field								Reproduction ratio
	f/2	f/2.8	f/4	f/5.6	f/8	f/11	f/16	f/22	
0.3	0.295–0.306	0.293–0.308	0.289–0.312	0.286–0.317	0.280–0.325	0.273–0.336	0.263–0.356	0.253–0.386	1/8.6
0.35	0.342–0.359	0.339–0.362	0.334–0.368	0.329–0.376	0.320–0.388	0.311–0.406	0.297–0.440	0.282–0.491	1/10.7
0.4	0.389–0.412	0.384–0.417	0.378–0.425	0.370–0.437	0.359–0.455	0.347–0.481	0.328–0.534	0.309–0.619	1/12.8
0.5	0.481–0.521	0.474–0.530	0.463–0.544	0.451–0.565	0.433–0.600	0.413–0.651	0.384–0.763	0.356–0.974	1/16.9
0.7	0.659–0.747	0.645–0.768	0.624–0.801	0.598–0.852	0.565–0.943	0.528–1.092	0.478–1.502	0.431–2.866	1/25.0
1	0.914–1.106	0.884–1.156	0.842–1.241	0.794–1.378	0.731–1.653	0.667–2.227	0.585–5.576	0.512–∞	1/37.3
2	1.661–2.525	1.557–2.826	1.424–3.447	1.280–4.905	1.114–13.871	0.962–∞	0.789–∞	0.654–∞	1/78.1
∞	9.090–∞	6.517–∞	4.588–∞	3.302–∞	2.337–∞	1.723–∞	1.221–∞	0.904–∞	1/∞

Nikkor 24mm f/2.8

Focusing distance	Depth of Field							Reproduction ratio
	f/2.8	f/4	f/5.6	f/8	f/11	f/16	f/22	
0.3	0.292–0.308	0.289–0.312	0.285–0.318	0.279–0.326	0.272–0.337	0.262–0.359	0.251–0.390	1/8.8
0.35	0.338–0.363	0.334–0.368	0.328–0.377	0.319–0.390	0.310–0.408	0.295–0.443	0.280–0.498	1/11
0.4	0.384–0.418	0.378–0.426	0.369–0.438	0.358–0.457	0.345–0.484	0.326–0.539	0.307–0.629	1/13
0.5	0.473–0.531	0.463–0.546	0.449–0.567	0.431–0.603	0.411–0.655	0.382–0.772	0.353–0.996	1/17
0.7	0.644–0.769	0.622–0.804	0.597–0.855	0.562–0.949	0.525–1.10	0.475–1.53	0.428–3.02	1/25
1	0.882–1.16	0.840–1.25	0.791–1.38	0.728–1.67	0.663–2.27	0.580–5.95	0.507–∞	1/38
2	1.55–2.84	1.42–3.48	1.27–4.99	1.11–14.8	0.955–∞	0.782–∞	0.648–∞	1/79
∞	6.46–∞	4.55–∞	3.27–∞	2.31–∞	1.71–∞	1.20–∞	0.894–∞	1/∞

Nikkor 28mm f/2

Focusing distance	Depth of Field								Reproduction ratio
	f/2	f/2.8	f/4	f/5.6	f/8	f/11	f/16	f/22	
0.25	0.248–0.252	0.247–0.253	0.246–0.255	0.244–0.257	0.241–0.260	0.239–0.264	0.234–0.271	0.229–0.280	1/5.3
0.3	0.296–0.304	0.295–0.306	0.293–0.308	0.290–0.311	0.286–0.317	0.281–0.324	0.273–0.337	0.265–0.354	1/7.1
0.35	0.344–0.356	0.342–0.359	0.339–0.362	0.335–0.368	0.328–0.376	0.321–0.387	0.310–0.408	0.298–0.437	1/8.9
0.4	0.392–0.409	0.389–0.412	0.384–0.418	0.378–0.425	0.370–0.437	0.360–0.454	0.345–0.485	0.330–0.531	1/10.7
0.5	0.486–0.515	0.481–0.521	0.473–0.531	0.463–0.545	0.450–0.567	0.434–0.598	0.410–0.661	0.386–0.760	1/14.2
0.7	0.670–0.733	0.659–0.747	0.643–0.770	0.623–0.803	0.596–0.859	0.565–0.942	0.522–1.130	0.480–1.504	1/21.2
1	0.936–1.075	0.912–1.109	0.880–1.163	0.840–1.247	0.788–1.399	0.732–1.656	0.656–2.422	0.586–5.746	1/31.7
2	1.740–2.358	1.655–2.541	1.542–2.881	1.415–3.512	1.261–5.272	1.113–14.604	0.935–∞	0.789–∞	1/66.7
∞	12.353–∞	8.850–∞	6.223–∞	4.471–∞	3.157–∞	2.321–∞	1.625–∞	1.207–∞	1/∞

Nikkor 28mm f/2.8

Focusing distance	Depth of Field							Reproduction ratio
	f/2.8	f/4	f/5.6	f/8	f/11	f/16	f/22	
0.2	0.199–0.201	0.198–0.202	0.198–0.202	0.197–0.203	0.196–0.204	0.194–0.207	0.192–0.209	1/3.88
0.25	0.247–0.253	0.246–0.254	0.245–0.255	0.243–0.258	0.240–0.261	0.237–0.266	0.232–0.273	1/5.71
0.3	0.295–0.305	0.294–0.307	0.291–0.310	0.288–0.314	0.283–0.320	0.277–0.330	0.269–0.344	1/7.5
0.35	0.343–0.357	0.340–0.361	0.336–0.365	0.331–0.372	0.324–0.382	0.314–0.399	0.303–0.422	1/9.28
0.4	0.390–0.411	0.386–0.416	0.380–0.422	0.373–0.433	0.364–0.447	0.350–0.473	0.335–0.510	1/11
0.5	0.482–0.519	0.475–0.528	0.466–0.541	0.453–0.560	0.438–0.588	0.416–0.641	0.392–0.723	1/14.6
0.7	0.661–0.744	0.646–0.766	0.627–0.796	0.601–0.847	0.571–0.921	0.529–1.09	0.487–1.39	1/21.6
1	0.916–1.10	0.884–1.16	0.845–1.23	0.794–1.37	0.739–1.61	0.663–2.26	0.593–4.60	1/32.1
2	1.66–2.53	1.55–2.85	1.42–3.45	1.27–5.07	1.12–12.6	0.94–∞	0.79–∞	1/67
∞	9–∞	6–∞	4–∞	3–∞	2–∞	2–∞	1–∞	1/∞

(Units = Meters)

Nikkor 35mm f/1.4

Focusing distance	Depth of Field								Reproduction ratio
	f/1.4	f/2	f/2.8	f/4	f/5.6	f/8	f/11	f/16	
0,3	0,298–0,302	0,298–0,302	0,297–0,303	0,295–0,305	0,294–0,307	0,291–0,310	0,288–0,314	0,283–0,321	1/5,5
0,35	0,347–0,353	0,346–0,354	0,345–0,355	0,343–0,358	0,340–0,361	0,336–0,365	0,331–0,372	0,324–0,383	1/6,9
0,4	0,396–0,404	0,395–0,405	0,393–0,407	0,390–0,411	0,386–0,415	0,381–0,422	0,374–0,431	0,364–0,448	1/8,3
0,5	0,494–0,506	0,491–0,509	0,488–0,513	0,483–0,519	0,476–0,527	0,467–0,540	0,456–0,556	0,439–0,588	1/11,1
0,7	0,686–0,714	0,681–0,720	0,674–0,729	0,663–0,742	0,649–0,761	0,630–0,791	0,608–0,832	0,575–0,914	1/16,7
1	0,971–1,032	0,958–1,046	0,943–1,065	0,921–1,096	0,893–1,141	0,854–1,216	0,811–1,326	0,749–1,568	1/25,1
2	1,876–2,143	1,827–2,211	1,767–2,309	1,683–2,474	1,585–2,737	1,457–3,263	1,326–4,313	1,155–9,516	1/52,9
∞	27,870–∞	19,538–∞	13,983–∞	9,817–∞	7,040–∞	4,957–∞	3,631–∞	2,526–∞	1/∞

Nikkor 35mm f/2

Focusing distance	Depth of Field								Reproduction ratio
	f/2	f/2.8	f/4	f/5.6	f/8	f/11	f/16	f/22	
0,3	0,298–0,303	0,297–0,304	0,295–0,305	0,293–0,307	0,290–0,311	0,287–0,315	0,282–0,322	0,276–0,322	1/5,67
0,35	0,346–0,354	0,345–0,355	0,343–0,358	0,340–0,361	0,336–0,366	0,331–0,373	0,323–0,385	0,314–0,400	1/7,10
0,4	0,395–0,405	0,393–0,408	0,390–0,411	0,386–0,416	0,380–0,423	0,373–0,433	0,362–0,450	0,350–0,474	1/8,51
0,5	0,491–0,510	0,487–0,513	0,482–0,519	0,476–0,528	0,466–0,541	0,455–0,558	0,437–0,591	0,418–0,637	1/11,3
0,7	0,683–0,718	0,676–0,726	0,666–0,738	0,654–0,755	0,636–0,781	0,615–0,818	0,584–0,888	0,551–0,992	1/16,9
1	0,958–1,05	0,942–1,07	0,919–1,10	0,891–1,14	0,852–1,22	0,808–1,33	0,745–1,58	0,683–2,05	1/25,3
2	1,83–2,21	1,77–2,31	1,68–2,48	1,58–2,74	1,45–3,28	1,32–4,34	1,15–9,71	0,999–∞	1/53,1
∞	19,5–∞	14,0–∞	9,80–∞	7,03–∞	4,94–∞	3,62–∞	2,52–∞	1,85–∞	1/∞

Nikkor 50mm f/1.2

Focusing distance	Depth of Field									Reproduction ratio
	f/1.2	f/1.4	f/2	f/2.8	f/4	f/5.6	f/8	f/11	f/16	
0,5	0,498–0,502	0,498–0,502	0,497–0,504	0,495–0,505	0,493–0,507	0,490–0,510	0,487–0,514	0,482–0,520	0,474–0,530	1/7,86
0,6	0,597–0,603	0,596–0,604	0,594–0,606	0,592–0,608	0,589–0,611	0,585–0,616	0,579–0,623	0,571–0,633	0,559–0,649	1/9,83
0,7	0,695–0,705	0,694–0,706	0,692–0,708	0,689–0,712	0,684–0,717	0,678–0,724	0,669–0,735	0,658–0,749	0,641–0,774	1/11,78
0,8	0,793–0,807	0,792–0,808	0,789–0,812	0,784–0,816	0,778–0,824	0,770–0,833	0,757–0,849	0,743–0,869	0,719–0,904	1/13,73
1	0,989–1,01	0,987–1,01	0,981–1,02	0,974–1,03	0,963–1,04	0,949–1,06	0,929–1,08	0,906–1,12	0,869–1,18	1/17,6
1,2	1,18–1,22	1,18–1,22	1,17–1,23	1,16–1,24	1,15–1,26	1,12–1,29	1,10–1,33	1,06–1,39	1,01–1,49	1/21,5
1,5	1,47–1,53	1,47–1,53	1,45–1,55	1,44–1,57	1,41–1,60	1,38–1,65	1,33–1,72	1,28–1,82	1,20–2,02	1/27,3
2	1,95–2,05	1,94–2,06	1,92–2,09	1,88–2,13	1,84–2,19	1,78–2,28	1,70–2,43	1,61–2,65	1,49–3,11	1/37,0
3	2,88–3,13	2,86–3,15	2,81–3,22	2,74–3,32	2,64–3,48	2,52–3,72	2,36–4,16	2,18–4,87	1,94–6,84	1/56,4
5	4,67–5,38	4,62–5,45	4,47–5,68	4,29–6,00	4,04–6,57	3,76–7,52	3,40–9,61	3,04–14,8	2,58–157,64	1/95,2
∞	67,0–∞	57,0–∞	40,0–∞	29,0–∞	20,0–∞	14,0–∞	10,0–∞	7,0–∞	5,0–∞	1/∞

Nikkor 50mm f/1.4

Focusing distance		Depth of Field								Reproduction ratio
		f/1.4	f/2	f/2.8	f/4	f/5.6	f/8	f/11	f/16	
0,45		0,448–0,453	0,446–0,454	0,445–0,455	0,443–0,457	0,440–0,460	0,436–0,465	0,431–0,471	0,424–0,481	1/6,84
0,5		0,497–0,503	0,495–0,505	0,494–0,507	0,491–0,509	0,488–0,513	0,482–0,519	0,476–0,527	0,466–0,541	1/7,83
0,6		0,595–0,605	0,593–0,607	0,590–0,610	0,586–0,614	0,581–0,621	0,573–0,630	0,564–0,642	0,549–0,663	1/9,79
0,7		0,693–0,707	0,690–0,710	0,686–0,714	0,681–0,721	0,673–0,729	0,663–0,743	0,650–0,760	0,629–0,792	1/11,7
0,8		0,791–0,810	0,787–0,814	0,782–0,819	0,774–0,828	0,764–0,840	0,750–0,858	0,733–0,882	0,707–0,927	1/13,7
1		0,985–1,02	0,979–1,02	0,970–1,03	0,958–1,05	0,943–1,07	0,920–1,10	0,894–1,14	0,854–1,22	1/17,6
1,2		1,18–1,22	1,17–1,23	1,16–1,25	1,14–1,27	1,12–1,30	1,08–1,35	1,05–1,41	0,991–1,54	1/21,5
1,5		1,46–1,54	1,45–1,55	1,43–1,58	1,40–1,61	1,37–1,66	1,32–1,74	1,26–1,85	1,18–2,08	1/27,3
2		1,94–2,07	1,91–2,10	1,88–2,14	1,83–2,21	1,77–2,30	1,69–2,47	1,59–2,71	1,46–3,23	1/37,0
3		2,86–3,16	2,80–3,23	2,73–3,33	2,62–3,51	2,50–3,76	2,33–4,23	2,16–5,00	1,92–7,24	1/56,4
5		4,61–5,47	4,46–5,70	4,27–6,03	4,02–6,62	3,73–7,62	3,37–9,85	3,01–15,6	2,55–∞	1/95,2
∞		57,2–∞	40,0–∞	28,6–∞	20,1–∞	14,4–∞	10,1–∞	7,35–∞	5,08–∞	1/∞

(Units = Meters)

Depth-of-field Tables (Telephoto Lenses)

Nikkor 85mm f/1.4

Focusing distance	Depth of Field									Reproduction ratio
	f/1.4	f/2	f/2.8	f/4	f/5.6	f/8	f/11	f/16	f/22	
0,85	0,847–0,853	0,846–0,855	0,844–0,856	0,841–0,859	0,838–0,863	0,832–0,869	0,826–0,876	0,816–0,888	0,804–0,904	1/7,9
1	0,995–1,00	0,993–1,01	0,991–1,01	0,987–1,01	0,982–1,02	0,974–1,03	0,965–1,04	0,950–1,06	0,932–1,08	1/9,7
1,2	1,19–1,21	1,19–1,21	1,19–1,21	1,18–1,22	1,17–1,23	1,16–1,24	1,15–1,26	1,12–1,29	1,10–1,33	1/12,1
1,5	1,49–1,51	1,48–1,52	1,48–1,52	1,47–1,53	1,45–1,55	1,44–1,57	1,41–1,60	1,38–1,65	1,34–1,72	1/15,6
2	1,98–2,02	1,97–2,03	1,96–2,05	1,94–2,07	1,91–2,09	1,88–2,14	1,84–2,19	1,78–2,30	1,71–2,43	1/21,5
3	2,95–3,05	2,93–3,08	2,90–3,11	2,86–3,16	2,80–3,23	2,73–3,34	2,64–3,49	2,50–3,77	2,36–4,17	1/33,3
5	4,85–5,16	4,79–5,23	4,71–5,33	4,60–5,48	4,46–5,70	4,26–6,06	4,04–6,59	3,72–7,73	3,40–9,75	1/56,8
10	9,41–10,7	9,18–11,0	8,89–11,4	8,48–12,2	8,00–13,4	7,37–15,6	6,71–19,9	5,85–36,5	5,07–∞	1/115,7
∞	155,0–∞	109,0–∞	78,0–∞	54,0–∞	39,0–∞	27,0–∞	20,0–∞	14,0–∞	10,0–∞	1/∞

Nikkor 85mm f/2

Focusing distance		Depth of Field								Reproduction ratio
		f/2	f/2.8	f/4	f/5.6	f/8	f/11	f/16	f/22	
0,85		0,845–0,855	0,843–0,857	0,840–0,860	0,837–0,864	0,831–0,870	0,824–0,878	0,813–0,891	0,800–0,908	1/8,1
1		0,993–1,007	0,990–1,010	0,986–1,015	0,981–1,020	0,972–1,030	0,963–1,041	0,947–1,061	0,928–1,087	1/9,9
1,2		1,189–1,211	1,185–1,215	1,179–1,222	1,171–1,231	1,159–1,245	1,144–1,263	1,120–1,294	1,094–1,344	1/12,2
1,5		1,483–1,518	1,476–1,525	1,466–1,536	1,452–1,551	1,433–1,574	1,410–1,605	1,372–1,658	1,331–1,727	1/15,8
2		1,968–2,033	1,955–2,047	1,937–2,068	1,913–2,097	1,878–2,141	1,836–2,200	1,771–2,306	1,699–2,448	1/21,7
3		2,925–3,079	2,869–3,112	2,854–3,162	2,800–3,233	2,723–3,345	2,632–3,496	2,495–3,784	2,348–4,203	1/33,5
5		4,789–5,231	4,710–5,329	4,596–5,485	4,453–5,707	4,254–6,077	4,031–6,616	3,707–7,771	3,384–9,851	1/57
10		9,174–10,993	8,881–11,449	8,475–12,209	7,990–13,397	7,359–15,696	6,701–20,000	5,836–37,025	5,058–∞	1/115,8
∞		108,540–∞	77,572–∞	54,347–∞	38,863–∞	27,250–∞	19,860–∞	13,702–∞	10,007–∞	1/∞

Nikkor 105mm f/1.8

Focusing distance	Depth of Field									Reproduction ratio
	f/1.8	f/2	f/2.8	f/4	f/5.6	f/8	f/11	f/16	f/22	
1	0,997–1,00	0,997–1,00	0,995–1,00	0,993–1,01	0,991–1,01	0,987–1,01	0,982–1,02	0,974–1,03	0,965–1,04	1/7,6
1,2	1,20–1,20	1,19–1,21	1,19–1,21	1,19–1,21	1,19–1,22	1,18–1,22	1,17–1,23	1,16–1,25	1,14–1,26	1/9,5
1,5	1,49–1,51	1,49–1,51	1,49–1,51	1,48–1,52	1,47–1,53	1,46–1,54	1,45–1,55	1,43–1,58	1,40–1,61	1/12,4
2	1,98–2,02	1,98–2,02	1,97–2,03	1,96–2,04	1,95–2,05	1,93–2,08	1,90–2,11	1,86–2,16	1,82–2,23	1/17,2
2,5	2,47–2,53	2,47–2,53	2,46–2,54	2,44–2,96	2,42–2,59	2,38–2,63	2,34–2,68	2,28–2,77	2,21–2,89	1/22
3	2,96–3,04	2,96–3,05	2,94–3,07	2,91–3,09	2,88–3,13	2,83–3,20	2,77–3,28	2,68–3,42	2,57–3,61	1/26,8
4	3,93–4,08	3,92–4,09	3,88–4,12	3,84–4,18	3,78–4,25	3,69–4,37	3,58–4,53	3,42–4,83	3,25–5,24	1/36,3
5	4,88–5,13	4,87–5,14	4,82–5,20	4,74–5,29	4,65–5,41	4,51–5,62	4,35–5,89	4,11–6,41	3,86–7,18	1/45,8
7	6,76–7,26	6,74–7,29	6,63–7,41	6,49–7,60	6,31–7,87	6,05–8,32	5,76–8,95	5,33–10,26	4,90–12,46	1/64,9
15	13,9–16,3	13,8–16,4	13,4–17,1	12,8–18,2	12,0–19,9	11,1–23,2	10,1–29,2	8,8–51,4	7,7–661,7	1/141,1
∞	184,0–∞	165,0–∞	118,0–∞	83,0–∞	59,0–∞	41,0–∞	30,0–∞	21,0–∞	15,0–∞	1/∞

Nikkor 105mm f/2.5

Focusing distance	Depth of Field								Reproduction ratio
	f/2.5	f/2.8	f/4	f/5.6	f/8	f/11	f/16	f/22	
1	0,994–1,01	0,994–1,01	0,991–1,01	0,988–1,01	0,983–1,02	0,976–1,03	0,966–1,04	0,954–1,05	1/7,69
1,2	1,19–1,21	1,19–1,21	1,19–1,21	1,18–1,22	1,17–1,23	1,16–1,24	1,14–1,26	1,13–1,28	1/9,62
1,5	1,49–1,51	1,48–1,52	1,48–1,52	1,47–1,53	1,46–1,55	1,44–1,57	1,42–1,60	1,38–1,64	1/12,5
2	1,97–2,03	1,97–2,03	1,96–2,04	1,94–2,06	1,92–2,09	1,89–2,12	1,85–2,19	1,79–2,27	1/17,3
2,5	2,46–2,54	2,45–2,55	2,43–2,57	2,41–2,60	2,37–2,64	2,33–2,70	2,26–2,81	2,18–2,94	1/22,1
3	2,94–3,06	2,93–3,07	2,90–3,10	2,87–3,15	2,81–3,21	2,75–3,30	2,65–3,46	2,54–3,68	1/26,8
4	3,89–4,12	3,88–4,13	3,83–4,19	3,76–4,27	3,67–4,40	3,56–4,57	3,39–4,89	3,21–5,35	1/36,4
5	4,83–5,19	4,81–5,21	4,73–5,31	4,63–5,44	4,49–5,65	4,32–5,94	4,07–6,51	3,81–7,35	1/45,9
7	6,66–7,38	6,62–7,42	6,47–7,62	6,28–7,91	6,02–8,37	5,72–9,04	5,29–10,4	4,85–12,8	1/64,9
15	13,5–16,8	13,4–17,1	12,8–18,2	12,1–19,9	11,1–23,1	10,2–29,0	8,9–50,7	7,7–523,4	1/141,1
∞	132,0–∞	118,0–∞	82,9–∞	59,2–∞	41,5–∞	30,3–∞	20,9–∞	15,2–∞	1/∞

(Units = Meters)

Nikkor 135mm f/2

Nikon Advanced Systems Dealer

Focusing distance	Depth of Field								Reproduction ratio
	f/2	f/2.8	f/4	f/5.6	f/8	f/11	f/16	f/22	
1.3	1.30–1.30	1.29–1.31	1.29–1.31	1.29–1.31	1.28–1.32	1.28–1.32	1.27–1.33	1.26–1.35	1/7.46
1.5	1.49–1.51	1.49–1.51	1.49–1.51	1.48–1.52	1.48–1.52	1.47–1.53	1.45–1.55	1.44–1.57	1/8.96
1.7	1.69–1.71	1.69–1.71	1.68–1.72	1.68–1.72	1.67–1.73	1.66–1.75	1.64–1.77	1.62–1.79	1/10.5
2	1.99–2.01	1.98–2.02	1.98–2.02	1.97–2.03	1.95–2.05	1.94–2.07	1.91–2.10	1.88–2.14	1/12.7
2.5	2.48–2.52	2.47–2.53	2.46–2.54	2.45–2.55	2.43–2.58	2.40–2.61	2.36–2.66	2.31–2.73	1/16.4
3	2.97–3.03	2.96–3.04	2.94–3.06	2.92–3.08	2.89–3.12	2.85–3.17	2.79–3.25	2.72–3.35	1/20.1
4	3.95–4.05	3.93–4.07	3.90–4.11	3.86–4.15	3.80–4.22	3.73–4.31	3.62–4.47	3.50–4.68	1/27.6
5	4.92–5.09	4.89–5.12	4.84–5.17	4.78–5.25	4.69–5.36	4.58–5.51	4.41–5.78	4.23–6.15	1/35.0
7	6.84–7.17	6.77–7.24	6.68–7.36	6.56–7.51	6.39–7.75	6.19–8.08	5.88–8.69	5.55–9.56	1/49.8
10	9.66–10.4	9.53–10.5	9.35–10.8	9.11–11.1	8.77–11.6	8.39–12.4	7.82–13.9	7.24–16.4	1/72.0
20	18.7–21.5	18.2–22.2	17.5–23.4	16.7–25.0	15.6–28.1	14.4–33.1	12.8–47.4	11.2–98.4	1/146.0
∞	274.0–∞	196.0–∞	137.0–∞	97.9–∞	68.6–∞	50.0–∞	34.5–∞	25.1–∞	1/∞

Nikkor 135mm f/2.8

Nikon CONSUMER PRODUCTS DEALER

Focusing distance	Depth of Field								Reproduction ratio
	f/2.8	f/4	f/5.6	f/8	f/11	f/16	f/22	f/32	
1.3	1.29–1.31	1.29–1.31	1.29–1.31	1.28–1.32	1.28–1.32	1.27–1.34	1.26–1.35	1.24–1.37	1/7.49
1.5	1.49–1.51	1.49–1.51	1.48–1.52	1.48–1.52	1.47–1.53	1.45–1.55	1.44–1.57	1.41–1.60	1/8.99
1.7	1.69–1.71	1.68–1.72	1.68–1.72	1.67–1.73	1.66–1.75	1.64–1.77	1.62–1.79	1.58–1.84	1/10.5
2	1.98–2.02	1.98–2.02	1.97–2.03	1.95–2.05	1.94–2.07	1.91–2.10	1.88–2.14	1.83–2.21	1/12.7
2.5	2.47–2.53	2.46–2.54	2.45–2.55	2.43–2.58	2.40–2.61	2.36–2.66	2.31–2.73	2.23–2.86	1/16.4
3	2.96–3.04	2.94–3.06	2.92–3.08	2.89–3.12	2.85–3.17	2.79–3.25	2.72–3.35	2.61–3.55	1/20.2
4	3.93–4.08	3.90–4.11	3.86–4.15	3.80–4.22	3.73–4.31	3.62–4.47	3.50–4.68	3.31–5.09	1/27.6
5	4.89–5.12	4.84–5.17	4.78–5.25	4.69–5.36	4.58–5.51	4.41–5.78	4.23–6.15	3.95–6.88	1/35.0
7	6.77–7.24	6.68–7.36	6.56–7.51	6.39–7.75	6.18–8.08	5.88–8.69	5.55–9.56	5.07–11.5	1/49.8
10	9.53–10.5	9.35–10.8	9.11–11.1	8.77–11.6	8.39–12.4	7.82–13.9	7.24–16.4	6.44–23.3	1/72.0
20	18.2–22.2	17.5–23.4	16.7–25.0	15.6–28.1	14.4–33.1	12.7–47.4	11.2–98.5	9.40–∞	1/146
∞	196.0–∞	137.0–∞	97.9–∞	68.6–∞	50.0–∞	34.4–∞	25.1–∞	17.4–∞	1/∞

Nikkor 200mm f/4

Nikon CONSUMER PRODUCTS DEALER

Focusing distance		Depth of Field							Reproduction ratio
		f/4	f/5.6	f/8	f/11	f/16	f/22	32	
2		1.99–2.01	1.99–2.01	1.98–2.02	1.98–2.02	1.97–2.03	1.96–2.05	1.94–2.07	1/7.44
2.5		2.49–2.51	2.48–2.52	2.47–2.53	2.46–2.54	2.44–2.56	2.42–2.58	2.39–2.02	1/9.97
3		2.98–3.02	2.97–3.03	2.96–3.05	2.94–3.06	2.91–3.09	2.88–3.13	2.83–3.19	1/12.5
4		3.96–4.04	3.94–4.06	3.92–4.09	3.88–4.12	3.83–4.18	3.78–4.26	3.68–4.38	1/17.5
5		4.93–5.07	4.90–5.10	4.86–5.15	4.81–5.20	4.73–5.30	4.64–5.43	4.50–5.65	1/22.5
7		6.86–7.15	6.80–7.21	6.72–7.31	6.62–7.43	6.46–7.64	6.29–7.91	6.01–8.42	1/32.6
10		9.70–10.3	9.59–10.5	9.42–10.7	9.22–10.9	8.91–11.4	8.56–12.1	8.04–13.3	1/47.6
15		14.3–15.8	14.1–16.1	13.7–16.6	13.3–17.3	12.6–18.6	11.9–20.4	10.9–24.4	1/72.7
30		27.3–33.3	26.4–34.8	25.1–37.3	23.7–41.1	21.6–49.5	19.6–65.5	16.9–144.0	1/148.0
∞		300.0–∞	214.0–∞	150.0–∞	109.0–∞	75.3–∞	54.9–∞	37.9–∞	1/∞

Nikkor 300mm f/4.5

Nikon CONSUMER PRODUCTS DEALER

Focusing distance		Depth of Field							Reproduction ratio
		f/4.5	f/5.6	f/8	f/11	f/16	f/22	f/32	
3.5		3.49–3.51	3.48–3.52	3.48–3.52	3.47–3.53	3.45–3.55	3.44–3.57	3.41–3.60	1/8.98
4		3.98–4.02	3.98–4.02	3.97–4.03	3.95–4.05	3.93–4.07	3.91–4.09	3.87–4.14	1/10.7
5		4.97–5.03	4.96–5.04	4.94–5.06	4.92–5.08	4.89–5.11	4.85–5.16	4.79–5.24	1/14.0
6		5.95–6.05	5.94–6.06	5.92–6.09	5.89–6.12	5.84–6.18	5.78–6.25	5.68–6.36	1/17.4
7		6.93–7.07	6.92–7.09	6.88–7.12	6.84–7.17	6.77–7.25	6.69–7.35	6.55–7.52	1/20.7
8		7.91–8.09	7.89–8.11	7.84–8.16	7.79–8.23	7.69–8.34	7.58–8.47	7.41–8.71	1/24.1
10		9.86–10.1	9.82–10.2	9.75–10.3	9.66–10.4	9.51–10.6	9.34–10.8	9.06–11.2	1/30.8
12		11.8–12.2	11.7–12.3	11.6–12.4	11.5–12.6	11.3–12.8	11.0–13.2	10.7–13.8	1/37.4
15		14.7–15.4	14.6–15.4	14.4–15.6	14.2–15.9	13.9–16.3	13.5–16.9	12.9–18.0	1/47.4
20		19.4–20.6	19.3–20.8	18.9–21.2	18.6–21.7	18.0–22.5	17.4–23.6	16.4–25.8	1/64.1
30		28.6–31.5	28.3–31.9	27.6–32.8	26.9–34.0	25.6–36.2	24.3–39.3	22.4–45.8	1/97.5
70		62.8–79.1	61.3–81.7	58.2–88.0	54.7–97.4	49.8–119.0	44.9–161.0	38.7–398.0	1/231.0
∞		600.0–∞	482.0–∞	338.0–∞	246.0–∞	169.0–∞	123.0–∞	85.0–∞	1/∞

(Units = Meters)

Nikkor ED 200mm f/2 IF

Focusing distance	Depth of field								Reproduction ratio
	f/2	f/2.8	f/4	f/5.6	f/8	f/11	f/16	f/22	
2.5	2.493–2.507	2.490–2.510	2.486–2.514	2.480–2.520	2.472–2.529	2.461–2.540	2.444–2.559	2.424–2.582	1/10.4
3	2.989–3.011	2.985–3.016	2.978–3.022	2.969–3.031	2.957–3.045	2.941–3.062	2.915–3.092	2.884–3.128	1/12.9
4	3.979–4.021	3.970–4.030	3.958–4.043	3.941–4.061	3.917–4.087	3.887–4.121	3.837–4.179	3.780–4.251	1/17.9
5	4.965–5.035	4.952–5.049	4.931–5.071	4.904–5.100	4.865–5.144	4.816–5.200	4.737–5.297	4.646–5.419	1/22.9
6	5.949–6.052	5.928–6.073	5.898–6.106	5.859–6.149	5.800–6.215	5.729–6.300	5.614–6.448	5.483–6.635	1/27.9
8	7.906–8.097	7.868–8.136	7.813–8.196	7.741–8.278	7.636–8.403	7.508–8.565	7.305–8.851	7.076–9.222	1/37.9
12	11.781–12.228	11.696–12.321	11.570–12.464	11.407–12.661	11.171–12.968	10.890–13.374	10.453–14.112	9.974–15.118	1/57.9
20	19.382–20.660	19.145–20.937	18.801–21.366	18.362–21.968	17.740–22.938	17.022–24.280	15.949–26.913	14.830–20.957	1/97.9
50	46.217–54.465	44.860–56.485	42.970–59.814	40.686–64.921	37.686–74.472	34.511–91.294	30.272–146.661	26.396–544.416	1/248.8
∞	600.425–∞	428.997–∞	300.425–∞	241.711–∞	150.425–∞	109.516–∞	75.425–∞	54.971–∞	1/∞

Nikkor ED 300mm f/4.5 IF

Focusing distance	Depth of field								Reproduction ratio
			f/4.5	f/5.6	f/8	f/11	f/16	f/22	
2.5			2.49–2.51	2.49–2.51	2.49–2.51	2.48–2.52	2.47–2.53	2.46–2.54	1/7.14
3			2.99–3.01	2.99–3.01	2.98–3.02	2.97–3.03	2.96–3.04	2.94–3.06	1/8.80
4			3.98–4.02	3.97–4.03	3.96–4.04	3.95–4.05	3.92–4.08	3.90–4.11	1/12.1
5			4.96–5.04	4.96–5.05	4.94–5.06	4.91–5.09	4.88–5.13	4.83–5.18	1/15.5
7			6.93–7.07	6.91–7.09	6.87–7.13	6.83–7.18	6.75–7.27	6.66–7.38	1/22.1
10			9.85–10.2	9.81–10.2	9.73–10.3	9.64–10.4	9.48–10.6	9.30–10.8	1/32.1
15			14.7–15.4	14.6–15.5	14.4–15.7	14.2–15.9	13.8–16.4	13.4–17.0	1/48.8
30			28.6–31.5	28.3–31.9	27.6–32.9	26.8–34.1	25.6–36.3	24.2–39.5	1/98.8
∞			601–∞	483–∞	338–∞	246–∞	169–∞	123–∞	1/∞

Nikkor ED 400mm f/2.8 IF

Focusing distance	Depth of Field							Reproduction ratio
	f/2.8	f/4	f/5.6	f/8	f/11	f/16	f/22	
4	3.99–4.01	3.99–4.1	3.99–4.01	3.98–4.02	3.97–4.03	3.96–4.04	3.94–4.06	1/8.3
5	4.99–5.01	4.98–5.02	4.98–5.02	4.97–5.03	4.95–5.05	4.93–5.07	4.91–5.10	1/10.8
6	5.98–6.02	5.98–6.02	5.97–6.04	5.95–6.05	5.93–6.07	5.90–6.10	5.86–6.14	1/13.3
7	6.98–7.02	6.97–7.03	6.95–7.05	6.93–7.07	6.90–7.10	6.86–7.14	6.81–7.20	1/15.8
8	7.97–8.03	7.95–8.05	7.94–8.07	7.91–8.09	7.87–8.13	7.82–8.19	7.75–8.27	1/18.3
10	9.95–10.1	9.93–10.1	9.90–10.1	9.85–10.2	9.79–10.2	9.71–10.3	9.60–10.4	1/23.2
12	11.9–12.1	11.9–12.1	11.8–12.2	11.8–12.2	11.7–12.3	11.6–12.5	11.4–12.7	1/28.3
15	14.9–15.1	14.8–15.2	14.8–15.3	14.7–15.4	14.5–15.5	14.3–15.7	14.1–16.1	1/35.8
20	19.8–20.3	19.7–20.3	19.6–20.5	19.4–20.7	19.1–20.9	18.8–21.3	18.4–22.0	1/48.3
30	29.5–30.5	29.3–30.7	29.0–31.1	28.6–31.5	28.1–32.2	27.4–33.2	26.4–34.8	1/73.3
50	48.6–51.5	48.0–52.1	47.3–53.1	46.2–54.4	44.8–56.5	43.0–59.8	40.7–65.0	1/123.3
∞	1698–∞	1201–∞	849–∞	601–∞	425–∞	301–∞	213–∞	1/∞

Nikkor ED 400mm f/3.5 IF

Focusing distance	Depth of field							Reproduction ratio
	f/3.5	f/4	f/5.6	f/8	f/11	f/16	f/22	
4.5	4.49–4.51	4.49–4.51	4.48–4.52	4.47–4.53	4.46–4.54	4.45–4.55	4.43–4.57	1/9.82
5	4.99–5.01	4.98–5.02	4.98–5.02	4.97–5.03	4.96–5.04	4.93–5.07	4.91–5.09	1/11.07
6	5.98–6.02	5.98–6.02	5.97–6.03	5.95–6.05	5.93–6.07	5.9–6.1	5.86–6.14	1/13.57
7	6.97–7.03	6.97–7.03	6.95–7.05	6.93–7.07	6.91–7.09	6.86–7.14	6.81–7.19	1/16.07
8	7.96–8.04	7.95–8.05	7.94–8.06	7.91–8.09	7.87–8.13	7.82–8.18	7.75–8.25	1/18.57
10	9.94–10.06	9.93–10.07	9.90–10.1	9.85–10.15	9.8–10.2	9.7–10.3	9.59–10.41	1/23.57
12	11.9–12.1	11.89–12.11	11.85–12.15	11.78–12.22	11.7–12.3	11.56–12.44	11.4–12.6	1/28.57
15	14.85–15.15	14.83–15.17	14.76–15.24	14.65–15.35	14.52–15.48	14.31–15.69	14.05–15.69	1/36.07
20	19.72–20.28	19.69–20.31	19.56–20.44	19.37–20.63	19.13–20.87	18.74–21.26	18.27–21.73	1/48.57
30	29.37–30.63	29.28–30.72	28.99–31.01	28.56–31.44	29.02–31.98	27.11–32.89	26.03–33.97	1/73.57
70	66.49–73.51	65.98–74.02	64.38–75.62	61.97–78.03	58.95–81.05	53.93–86.07	47.91–92.09	1/173.57
∞	1372.0–∞	1200.57–∞	857.71–∞	600.57–∞	436.94–∞	300.57–∞	218.75–∞	1/∞

(Units = Meters)

Nikkor ED 400mm f/5.6 IF

Nikon Advanced Systems Dealer

Focusing distance	Depth of field						Reproduction ratio
	f/5.6	f/8	f/11	f/16	f/22	f/32	
4	3.99–4.01	3.98–4.02	3.97–4.03	3.96–4.04	3.94–4.06	3.92–4.09	1/8.82
5	4.98–5.02	4.97–5.03	4.95–5.05	4.93–5.07	4.91–5.10	4.87–5.14	1/11.3
6	5.96–6.04	5.95–6.05	5.93–6.07	5.90–6.10	5.86–6.14	5.80–6.21	1/13.8
7	6.95–7.05	6.93–7.07	6.90–7.10	6.86–7.15	6.81–7.20	6.73–7.30	1/16.3
8	7.93–8.07	7.91–8.10	7.87–8.13	7.82–8.19	7.75–8.27	7.64–8.40	1/18.8
10	9.90–10.1	9.85–10.2	9.80–10.2	9.71–10.3	9.60–10.4	9.43–10.7	1/23.8
12	11.9–12.2	11.8–12.2	11.7–12.3	11.6–12.5	11.4–12.6	11.2–13.0	1/28.8
15	14.8–15.3	14.7–15.4	14.5–15.5	14.3–15.7	14.1–16.0	13.7–16.6	1/36.3
20	19.6–20.5	19.4–20.7	19.2–20.9	18.8–21.4	18.4–21.9	17.8–22.9	1/48.8
30	29.0–31.1	28.6–31.5	28.1–32.2	27.4–33.2	26.5–34.6	25.2–37.3	1/73.8
50	47.3–53.0	46.2–54.5	45.0–56.4	43.0–59.8	40.9–64.6	37.7–74.5	1/124.0
∞	858.0–∞	601.0–∞	437.0–∞	301.0–∞	219.0–∞	151.0–∞	1/∞

Nikkor ED 600mm f/4 IF

Nikon Advanced Systems Dealer

Focusing distance	Depth of field						Reproduction ratio
	f/4	f/5.6	f/8	f/11	f/16	f/22	
6.5	6.49–6.51	6.48–6.52	6.48–6.52	6.47–6.53	6.45–6.55	6.44–6.57	1/9.5
7	6.99–7.01	6.98–7.02	6.97–7.03	6.96–7.04	6.94–7.06	6.92–7.08	1/10.3
8	7.98–8.02	7.97–8.03	7.96–8.04	7.95–8.05	7.92–8.08	7.90–8.11	1/12.0
10	9.97–10.03	9.96–10.04	9.94–10.06	9.92–10.09	9.88–10.13	9.83–10.18	1/15.4
12	11.95–12.05	11.94–12.07	11.91–12.09	11.87–12.13	11.82–12.19	11.75–12.26	1/18.7
15	14.93–15.08	14.90–15.11	14.85–15.15	14.80–15.21	14.71–15.31	14.60–15.42	1/23.7
20	19.87–20.14	19.81–20.19	19.73–20.28	19.63–20.38	19.47–20.56	19.28–20.78	1/32.0
30	29.69–30.32	29.57–30.45	29.38–30.65	29.16–30.89	28.79–31.32	28.36–31.85	1/48.7
50	49.12–50.91	48.78–51.29	48.27–51.86	47.65–52.59	46.66–53.87	45.52–55.48	1/82.0
100	96.49–103.78	95.15–105.38	93.21–108.87	90.90–111.15	87.29–117.09	83.33–125.12	1/165.0
∞	2700.81–∞	1929.38–∞	1350.81–∞	982.63–∞	675.81–∞	491.72–∞	1/∞

Nikkor ED 600mm f/5.6 IF

Nikon Advanced Systems Dealer

Focusing distance	Depth of field						Reproduction ratio
	f/5.6	f/8	f/11	f/16	f/22	f/32	
5.5	5.49–5.51	5.48–5.52	5.48–5.52	5.47–5.53	5.45–5.55	5.43–5.57	1/8.09
6	5.99–6.01	5.98–6.02	5.97–6.03	5.96–6.04	5.94–6.06	5.91–6.09	1/8.92
7	6.98–7.02	6.97–7.03	6.96–7.04	6.94–7.06	6.92–7.08	6.88–7.13	1/10.6
8	7.97–8.03	7.96–8.04	7.94–8.06	7.92–8.08	7.89–8.11	7.84–8.17	1/12.3
10	9.95–10.1	9.94–10.1	9.91–10.1	9.87–10.1	9.82–10.2	9.74–10.3	1/15.6
12	11.9–12.1	11.9–12.1	11.9–12.1	11.8–12.2	11.7–12.3	11.6–12.4	1/18.9
15	14.9–15.1	14.9–15.2	14.8–15.2	14.7–15.3	14.6–15.4	14.4–15.7	1/23.9
20	19.8–20.2	19.7–20.3	19.6–20.4	19.5–20.6	19.2–20.8	18.9–21.2	1/32.3
30	29.6–30.5	29.4–30.6	29.1–30.9	28.7–31.3	28.2–31.8	27.6–32.8	1/48.9
70	67.5–72.5	66.4–73.6	65.1–74.9	62.9–77.1	60.2–79.2	58.2–88.1	1/116.0
∞	1929.0–∞	1351.0–∞	982.0–∞	676.0–∞	492.0–∞	339.0–∞	1/∞

Nikkor ED 800mm f/5.6 IF

Nikon Advanced Systems Dealer

Focusing distance	Depth of field						Reproduction ratio
	f/5.6	f/8	f/11	f/16	f/22	f/32	
30	29.11–30.0	29.10–30.1	29.10–30.1	29.9–30.2	29.8–30.3	29.7–30.4	1/10.3
35	34.10–35.1	34.10–35.1	34.9–35.2	34.8–35.3	34.7–35.4	34.5–35.6	1/12.2
40	39.10–40.1	39.9–40.2	39.8–40.3	39.7–40.4	39.6–40.6	39.3–40.8	1/14.1
50	49.9–50.2	49.8–50.3	49.7–50.4	49.5–50.6	49.2–50.9	48.10–51.2	1/17.9
70	69.7–70.4	69.5–70.7	69.2–70.9	68.10–71.2	68.4–71.8	67.9–72.4	1/25.5
100	99.1–100	98.9–101	98.3–101	97.7–102	96.8–103	95.4–105	1/37
150	148–151	147–152	146–154	144–155	142–158	139–161	1/56
300	292–308	289–311	284–316	279–324	271–335	260–353	1/113
8	11144–∞	7881–∞	5574–∞	3943–∞	2790–∞	1974–∞	1/∞

*By using Internal Focusing (IF), the closest focusing distance of this lens is shorter than previous models at the same focal length, which utilized traditional helicoid focusing.

P Nikkor ED 500mm f/4 IF

Nikon Advanced Systems Dealer

(ft)

Focusing distance	Depth of Field						Reproduction ratio
	f/4	f/5.6	f/8	f/11	f/16	f/22	
20	19'11"—20'	19'11"—20'	19'10"—20'1"	19'10"—20'1"	19'9"—20'2"	19'8"—20'3"	1/10.9
25	24'10"—25'1"	24'10"—25'1"	24'9"—25'2"	24'9"—25'2"	24'7"—25'4"	24'6"—25'6"	1/14
30	29'10"—30'1"	29'9"—30'2"	29'8"—30'3"	29'7"—30'4"	29'5"—30'6"	29'3"—30'8"	1/17.1
40	39'9"—40'2"	39.7"—40'4"	39'6"—40'5"	39'4"—40'8"	39'—40'11"	38'8"—41'4"	1/23.2
50	49'7"—50'4"	49'5"—50'6"	49'2"—50'9"	48'11"—51'1"	48'6"—51'7"	47'11"—52'2"	1/29.4
70	69'2"—70'9"	68'11"—71'1"	68'5"—71'6"	67'11"—72'2"	67'—73'2"	66'—74'6"	1/41.7
100	98'5"—101'	97'9"—102'	96'10"—103'	95'9"—104'	94'—106'	91'11"—109'	1/60
∞	6033'—∞	4310'—∞	3018'—∞	2196'—∞	1510'—∞	1099'—∞	1/∞

(Units = Feet)

Reflex-Nikkor 500mm f/8

Nikon Consumer Products Dealer

Focusing distance	Depth of field							Reproduction ratio
							f/8	
1.5							1.499–1.501	1/2.5
1.7							1.698–1.702	1/2.9
2							1.997–2.003	1/3.5
2.5							2.496–2.504	1/4.5
3							2.993–3.007	1/5.5
4							3.99–4.01	1/7.5
5							4.98–5.02	1/9.5
7							6.96–7.04	1/13.0
10							9.92–10.1	1/19.0
20							19.7–20.3	1/36.0
50							48.1–52.1	1/96.0
∞							1119.0–∞	1/∞

Reflex-Nikkor 1000mm f/11

Nikon Advanced Systems Dealer

Focusing distance	Depth of field							Reproduction ratio
							f/11	
8							7.98–8.02	1/7.4
10							9.97–10.0	1/9.4
12							11.96–12.04	1/11.0
15							14.9–15.1	1/14.0
20							19.9–20.1	1/19.0
30							29.7–30.3	1/29.0
50							49.3–50.7	1/49.0
100							97.1–103.0	1/99.0
∞							3000.0–∞	1/∞

Fisheye-Nikkor 6mm f/2.8

Nikon Advanced Systems Dealer

Focusing distance	Depth of field							Reproduction ratio
	f/2.8	f/4	f/5.6	f/8	f/11	f/16	f/22	
0.25	0.231–0.277	0.224–0.292	0.216–0.318	0.207–0.373	0.196–0.533	0.185–3.66	0.174–∞	1/21.4
0.3	0.266–0.354	0.255–0.389	0.242–0.458	0.228–0.647	0.212–2.60	0.196–∞	0.181–∞	1/29.5
0.4	0.327–0.553	0.306–0.684	0.283–1.09	0.260–∞	0.234–∞	0.211–∞	0.191–∞	1/45.6
0.5	0.377–0.842	0.346–1.29	0.313–8.43	0.280–∞	0.249–∞	0.221–∞	0.197–∞	1/61.7
1	0.542–∞	0.465–∞	0.395–∞	0.333–∞	0.282–∞	0.240–∞	0.208–∞	1/142
∞	0.941–∞	0.694–∞	0.525–∞	0.405–∞	0.321–∞	0.261–∞	0.219–∞	1/∞

(Units = Meters)

Fisheye-Nikkor 8mm f/2.8

Nikon Advanced Systems Dealer

Focusing distance	Depth of field							Reproduction ratio
	f/2.8	f/4	f/5.6	f/8	f/11	f/16	f/22	
0,3	0,283–0,322	0,277–0,333	0,269–0,350	0,260–0,383	0,249–0,442	0,236–0,651	0,223–3,208	1/19,7
0,4	0,358–0,462	0,344–0,499	0,328–0,563	0,308–0,720	0,289–1,221	0,265–∞	0,244–∞	1/32,2
0,5	0,425–0,630	0,401–0,720	0,376–0,909	0,345–1,647	0,317–∞	0,284–∞	0,258–∞	1/44,7
1	0,668–2,473	0,593–8,945	0,521–∞	0,448–∞	0,389–∞	0,328–∞	0,286–∞	1/107,3
∞	1,513–∞	1,102–∞	0,828–∞	0,622–∞	0,491–∞	0,382–∞	0,317–∞	1/∞

Fisheye-Nikkor 16mm f/2.8

Nikon Advanced Systems Dealer

Focusing distance	Depth of field							Reproduction ratio
	f/2.8	f/4	f/5.6	f/8	f/11	f/16	f/22	
0,3	0,283–0,320	0,277–0,329	0,269–0,344	0,259–0,368	0,247–0,407	0,231–0,502	0,215–0,735	1/13,4
0,4	0,366–0,444	0,353–0,467	0,338–0,502	0,319–0,570	0,298–0,695	0,271–1,15	0,247–11,8	1/19,8
0,5	0,443–0,579	0,423–0,624	0,399–0,697	0,370–0,854	0,340–1,22	0,303–5,58	0,270–∞	1/26,2
0,7	0,583–0,891	0,545–1,02	0,503–1,26	0,453–2,00	0,405–9,43	0,348–∞	0,302–∞	1/39,0
1	0,763–1,50	0,695–1,92	0,624–3,16	0,543–∞	0,471–∞	0,391–∞	0,331–∞	1/58,1
2	1,19–7,21	1,02–∞	0,865–∞	0,707–∞	0,582–∞	0,458–∞	0,372–∞	1/122
∞	2,64–∞	1,84–∞	1,32–∞	0,922–∞	0,671–∞	0,461–∞	0,335–∞	1/∞

PC-Nikkor 28mm f/3.5

Nikon Advanced Systems Dealer

Focusing distance	Depth of field							Reproduction ratio
		f/3.5	f/4	f/5.6	f/8	f/11	f/16	f/22	
0,3		0,295–0,305	0,295–0,306	0,293–0,308	0,289–0,312	0,286–0,317	0,280–0,325	0,274–0,336	1/6,9
0,35		0,342–0,358	0,341–0,359	0,338–0,363	0,333–0,369	0,327–0,378	0,319–0,392	0,309–0,412	1/8,68
0,4		0,389–0,412	0,387–0,414	0,382–0,420	0,376–0,429	0,367–0,442	0,355–0,465	0,341–0,497	1/10,5
0,5		0,480–0,522	0,477–0,526	0,469–0,537	0,457–0,555	0,443–0,580	0,422–0,629	0,400–0,701	1/14,0
0,7		0,655–0,754	0,649–0,762	0,631–0,790	0,605–0,838	0,577–0,908	0,537–1,059	0,496–1,336	1/21,0
1		0,900–1,13	0,888–1,15	0,850–1,22	0,800–1,36	0,746–1,58	0,673–2,19	0,604–4,26	1/31,5
2		1,60–2,69	1,56–2,84	1,43–3,42	1,28–4,99	1,13–12,00	0,95–∞	0,81–∞	1/66,5
∞		7–∞	6–∞	4–∞	3–∞	2–∞	2–∞	1–∞	1/∞

PC-Nikkor 35mm f/2.8

Nikon Advanced Systems Dealer

Focusing distance	Depth of field								Reproduction ratio
	f/2.8	f/4	f/5.6	f/8	f/11	f/16	f/22	f/32	
0,3	0,298–0,302	0,297–0,303	0,296–0,305	0,294–0,307	0,292–0,309	0,288–0,314	0,284–0,319	0,278–0,329	1/5,3
0,35	0,346–0,354	0,345–0,355	0,343–0,358	0,340–0,361	0,336–0,365	0,331–0,373	0,324–0,383	0,314–0,401	1/6,7
0,4	0,395–0,406	0,392–0,408	0,389–0,412	0,385–0,417	0,380–0,424	0,371–0,435	0,362–0,451	0,348–0,481	1/8,1
0,5	0,490–0,511	0,486–0,515	0,480–0,522	0,473–0,532	0,463–0,545	0,449–0,569	0,433–0,602	0,410–0,667	1/11
0,7	0,677–0,725	0,668–0,736	0,656–0,752	0,638–0,778	0,619–0,812	0,588–0,878	0557–0,976	0,512–1,210	1/16
1	0,948–1,06	0,927–1,09	0,902–1,13	0,866–1,19	0,825–1,29	0,766–1,49	0,707–1,84	0,629–3,15	1/25
2	1,78–2,29	1,70–2,44	1,60–2,69	1,48–3,16	1,35–4,08	1,18–8,01	1,03–∞	0,86–∞	1/52
∞	14–∞	10–∞	7–∞	5–∞	4–∞	3–∞	2–∞	1–∞	1/∞

Noct-Nikkor 58mm f/1.2

Nikon Advanced Systems Dealer

Focusing distance	Depth of field								Reproduction ratio
	f/1.2	f/1.4	f/2	f/2.8	f/4	f/5.6	f/8	f/11	f/16	
0,5	0,498–0,502	0,498–0,502	0,497–0,503	0,495–0,505	0,493–0,507	0,491–0,510	0,487–0,514	0,482–0,520	0,474–0,530	1/6,7
0,55	0,547–0,553	0,547–0,553	0,546–0,554	0,544–0,556	0,541–0,559	0,538–0,563	0,533–0,568	0,527–0,575	0,518–0,588	1/7,6
0,6	0,597–0,603	0,596–0,604	0,595–0,605	0,593–0,608	0,590–0,611	0,585–0,615	0,579–0,622	0,572–0,631	0,561–0,647	1/8,5
0,7	0,695–0,705	0,695–0,705	0,692–0,708	0,689–0,711	0,685–0,716	0,679–0,722	0,691–0,732	0,661–0,745	0,645–0,768	1/10
0,8	0,794–0,806	0,793–0,807	0,790–0,810	0,786–0,815	0,780–0,821	0,772–0,830	0,761–0,844	0,748–0,862	0,726–0,894	1/12
0,9	0,892–0,908	0,891–0,910	0,887–0,914	0,882–0,919	0,874–0,928	0,864–0,939	0,850–0,958	0,833–0,981	0,806–1,02	1/14
1	0,990–1,01	0,988–1,01	0,983–1,02	0,977–1,02	0,967–1,04	0,955–1,05	0,937–1,07	0,916–1,10	0,883–1,16	1/15
1,2	1,19–1,22	1,18–1,22	1,18–1,23	1,17–1,24	1,15–1,25	1,13–1,27	1,11–1,31	1,08–1,36	1,03–1,45	1/19
1,5	1,48–1,52	1,47–1,53	1,46–1,54	1,45–1,56	1,42–1,59	1,40–1,62	1,36–1,68	1,31–1,76	1,24–1,92	1/24
2	1,96–2,05	1,95–2,05	1,93–2,08	1,90–2,11	1,86–2,16	1,81–2,23	1,75–2,35	1,67–2,51	1,55–2,85	1/33
3	2,90–3,11	2,89–3,12	2,84–3,18	2,78–3,26	2,70–3,38	2,60–3,57	2,45–3,89	2,29–4,38	2,08–5,56	1/50
5	4,73–5,31	4,69–5,36	4,56–5,53	4,41–5,78	4,20–6,20	3,94–6,86	3,62–8,17	3,28–10,8	2,85–22,9	1/84
10	8,95–11,3	8,80–11,6	8,37–12,4	7,86–13,8	7,20–16,5	6,48–22,2	5,63–47,0	4,85–∞	3,94–∞	1/171
∞	84,2–∞	72,2–∞	50,6–∞	36,1–∞	25,3–∞	18,1–∞	12,7–∞	9,28–∞	6,41–∞	1/∞

(Units = Meters)

Micro-Nikkor 55mm f/2.8

Focusing distance	Depth of field								Reproduction ratio
	f/2.8	f/4	f/5.6	f/8	f/11	f/16	f/22	f/32	
0,25	0,25–0,25	0,25–0,25	0,249–0,251	0,249–0,251	0,249–0,251	0,248–0,252	0,248–0,252	0,247–0,254	1/1,9
0,26	0,26–0,26	0,259–0,261	0,259–0,261	0,259–0,261	0,258–0,262	0,258–0,262	0,257–0,263	0,256–0,265	1/2,2
0,28	0,279–0,281	0,279–0,281	0,279–0,281	0,278–0,282	0,278–0,282	0,277–0,283	0,276–0,285	0,274–0,287	1/2,6
0,3	0,299–0,301	0,299–0,301	0,298–0,302	0,298–0,302	0,297–0,303	0,296–0,305	0,294–0,307	0,291–0,31	1/3,0
0,35	0,349–0,351	0,348–0,352	0,347–0,353	0,346–0,354	0,345–0,356	0,342–0,358	0,339–0,362	0,335–0,368	1/4,0
0,4	0,398–0,402	0,397–0,403	0,396–0,405	0,394–0,406	0,392–0,409	0,388–0,413	0,384–0,419	0,377–0,428	1/5,0
0,5	0,496–0,504	0,494–0,506	0,492–0,509	0,488–0,513	0,484–0,517	0,477–0,526	0,469–0,537	0,457–0,556	1/6,9
0,6	0,593–0,607	0,59–0,61	0,587–0,614	0,581–0,621	0,574–0,629	0,564–0,643	0,551–0,661	0,532–0,694	1/8,7
0,7	0,69–0,71	0,686–0,715	0,68–0,721	0,672–0,731	0,663–0,743	0,647–0,764	0,63–0,792	0,603–0,845	1/10,6
0,8	0,786–0,814	0,781–0,821	0,773–0,829	0,762–0,843	0,749–0,86	0,728–0,891	0,705–0,932	0,67–1,01	1/12,4
1	0,977–1,02	0,967–1,04	0,955–1,05	0,937–1,07	0,916–1,1	0,883–1,16	0,846–1,24	0,793–1,39	1/16
1,2	1,17–1,24	1,15–1,25	1,13–1,28	1,11–1,31	1,08–1,36	1,03–1,45	0,98–1,58	0,9–1,85	1/19,7
1,5	1,44–1,56	1,42–1,59	1,39–1,63	1,35–1,69	1,3–1,78	1,23–1,94	1,15–2,19	1,05–2,79	1/25,2
2	1,9–2,12	1,86–2,17	1,8–2,25	1,73–2,37	1,65–2,55	1,53–2,93	1,41–3,56	1,25–5,64	1/34,3
3	2,77–3,28	2,68–3,42	2,57–3,62	2,42–3,98	2,26–4,54	2,03–5,95	1,82–9,59	1,55–∞	1/52,4
5	4,36–5,86	4,14–6,34	3,87–7,10	3,53–8,68	3,19–12,04	2,74–34,62	2,53–∞	1,91–∞	1/88,8
∞	33–∞	23–∞	16–∞	11–∞	8–∞	6–∞	4–∞	3–∞	1/∞

Micro-Nikkor 105mm f/2.8

Focusing distance	Depth of field								Reproduction ratio
	f/2.8	f/4	f/5.6	f/8	f/11	f/16	f/22	f/32	
0,41	0,409–0,410	0,409–0,410	0,408–0,411	0,408–0,411	0,407–0,412	0,407–0,412	0,405–0,414	0,404–0,416	1/2
0,45	0,449–0,451	0,449–0,451	0,449–0,451	0,448–0,452	0,447–0,453	0,446–0,454	0,444–0,456	0,442–0,459	1/2,43
0,5	0,499–0,501	0,499–0,501	0,498–0,502	0,497–0,503	0,496–0,504	0,494–0,506	0,492–0,509	0,489–0,512	1/2,95
0,55	0,549–0,551	0,548–0,552	0,547–0,553	0,546–0,554	0,545–0,556	0,542–0,558	0,539–0,561	0,535–0,566	1/3,45
0,6	0,598–0,602	0,598–0,603	0,597–0,604	0,595–0,605	0,593–0,607	0,590–0,610	0,586–0,615	0,581–0,621	1/3,95
0,7	0,697–0,703	0,696–0,704	0,695–0,705	0,693–0,708	0,690–0,711	0,685–0,716	0,680–0,722	0,672–0,732	1/4,93
0,8	0,796–0,804	0,795–0,805	0,793–0,808	0,790–0,811	0,786–0,815	0,780–0,822	0,772–0,831	0,761–0,845	1/5,9
1	0,994–1,01	0,991–1,01	0,987–1,01	0,982–1,02	0,975–1,03	0,966–1,04	0,952–1,05	0,934–1,08	1/7,8
1,2	1,19–1,21	1,19–1,21	1,18–1,22	1,17–1,23	1,16–1,24	1,15–1,26	1,13–1,28	1,10–1,32	1/9,7
1,5	1,48–1,52	1,48–1,52	1,47–1,53	1,46–1,55	1,44–1,57	1,42–1,60	1,38–1,64	1,34–1,71	1/12,6
2	1,97–2,03	1,96–2,04	1,94–2,06	1,92–2,09	1,89–2,13	1,85–2,19	1,79–2,28	1,72–2,42	1/17,4
3	2,93–3,07	2,90–3,10	2,87–3,15	2,81–3,21	2,74–3,31	2,65–3,46	2,53–3,71	2,38–4,12	1/26,9
7	6,62–7,43	6,47–7,62	6,28–7,92	6,02–8,37	5,70–9,12	5,29–10,4	4,81–13,2	4,27–21,0	1/65
∞	117–∞	83–∞	59–∞	42–∞	29–∞	21–∞	15–∞	11–∞	1/∞

Micro-Nikkor 200mm f/4 IF

Focusing distance	Depth of field							Reproduction ratio
		f/4	f/5.6	f/8	f/11	f/16	f/22	f/32	
0,71		0,709–0,711	0,709–0,711	0,709–0,711	0,708–0,712	0,707–0,713	0,706–0,714	0,705–0,715	1/1,99
0,8		0,799–0,801	0,799–0,801	0,798–0,802	0,797–0,803	0,796–0,804	0,795–0,805	0,792–0,808	1/2,44
0,9		0,899–0,901	0,898–0,902	0,897–0,903	0,896–0,904	0,895–0,905	0,893–0,908	0,889–0,911	1/2,94
1		0,998–1,00	0,997–1,00	0,996–1,00	0,995–1,01	0,993–1,01	0,990–1,01	0,986–1,01	1/3,4
1,2		1,20–1,20	1,20–1,20	1,19–1,21	1,19–1,21	1,19–1,21	1,18–1,22	1,18–1,22	1/4,4
1,5		1,49–1,51	1,49–1,51	1,49–1,51	1,49–1,51	1,48–1,52	1,47–1,53	1,46–1,54	1/5,9
2		1,99–2,01	1,99–2,01	1,98–2,02	1,97–2,03	1,96–2,04	1,95–2,06	1,92–2,08	1/8,4
3		2,98–3,03	2,97–3,04	2,95–3,05	2,93–3,07	2,90–3,10	2,87–3,14	2,81–3,22	1/13,4
4		3,95–4,05	3,94–4,07	3,91–4,10	3,88–4,13	3,82–4,20	3,76–4,28	3,66–4,42	1/18,4
6		5,89–6,11	5,85–6,16	5,79–6,23	5,71–6,32	5,59–6,48	5,45–6,68	5,24–7,04	1/28,4
12		11,6–12,5	11,4–12,7	11,1–13,0	10,9–13,4	10,4–14,2	9,9–15,2	9,2–17,4	1/58,4
∞		300–∞	215–∞	150–∞	109–∞	75–∞	55–∞	38–∞	1/∞

(Units = Meters)

Depth-of-field Tables (Autofocus Lenses)

AF Nikkor 20mm f/2.8

Nikon Advanced Systems Dealer

Focusing distance			Depth of field							Reproduction ratio
			f/2.8	f/4	f/5.6	f/8	f/11	f/16	f/22	
0.85			9 5/16″–10 7/16″	9 13/16″–10 9/16″	9 11/16″–10 11/16″	9 1/2″–11″	9 5/16″–11 5/16″	8 15/16″–1′	8 5/8″–1′ 1 5/16″	1/8.8
1			11 9/16″–1′ 3/8″	11 7/16″–1′ 5/8″	11 3/16″–1′ 7/8″	10 15/16″–1′ 1 5/16″	10 5/8″–1′ 1 15/16″	10 1/8″–1′ 3 3/16″	9 9/16″–1′ 5 1/16″	1/11.1
1.25			1′ 2 1/4″–1′ 3 3/4″	1′ 2″–1′ 4 1/8″	1′ 1 5/8″–1′ 4 11/16″	1′ 1 1/8″–1′ 5 5/8″	1′ 5/8″–1′ 6 15/16″	11 13/16″–1′ 9 11/16″	11″–2′ 3 3/4″	1/14.8
1.5			1′ 4 7/8″–1′ 7 1/4″	1′ 4 7/16″–1′ 7 15/16″	1′ 3 7/8″–1′ 8 7/8″	1′ 3 3/16″–1′ 10 7/16″	1′ 2 3/8″–2′ 7/8″	1′ 1 1/4″–2′ 6 3/4″	1′ 3/16″–3′ 7 7/8″	1/18.6
2			1′ 9 13/16″–2′ 2 11/16″	1′ 9″–2′ 4 1/16″	1′ 8 1/16″–2′ 6 1/4″	1′ 6 13/16″–2′ 10 1/4″	1′ 5 7/16″–3′ 5 1/4″	1′ 3 1/16″–5′ 4 1/8″	1′ 2″–18′ 4 5/16″	1/26.1
3			2′ 6 7/8″–3′ 7 3/8″	2′ 5 1/8″–3′ 11 11/16″	2′ 3 1/8″–4′ 7 1/16″	2′ 5/8″–6′ 5 1/16″	1′ 10 3/16″–10′ 11 1/8″	1′ 7 1/8″–8	1′ 4 1/2″–8	1/41.1
5			3′ 10 1/8″–7′ 2 7/8″	3′ 6 1/16″–9′ 1/8″	3′ 1 11/16″–13′ 5 3/4″	2′ 8 3/4″–56′ 8 1/16″	2′ 4 3/8″	1′ 11 1/8″–8	1′ 7 3/16″–8	1/71.0
8			14′–∞	10′ 6 1/16″–∞	7′ 6 7/8″–∞	5′ 4 9/16″–∞	3′ 11 3/4″–∞	2′ 9 13/16″–∞	2′ 1 7/16″–∞	1/∞

AF Nikkor 24mm f/2.8

Nikon Consumer Products Dealer

Focusing distance			Depth of field							Reproduction ratio
			f/2.8	f/4	f/5.6	f/8	f/11	f/16	f/22	
0,3			0,292–0,308	0,289–0,312	0,285–0,318	0,279–0,326	0,272–0,337	0,262–0,359	0,251–0,390	1/8,8
0,35			0,338–0,363	0,334–0,368	0,328–0,377	0,319–0,390	0,310–0,408	0,295–0,443	0,280–0,498	1/11
0,4			0,384–0,418	0,378–0,426	0,369–0,438	0,358–0,457	0,345–0,484	0,326–0,539	0,307–0,629	1/13
0,5			0,473–0,531	0,463–0,546	0,449–0,567	0,431–0,603	0,411–0,655	0,382–0,772	0,353–0,996	1/17
0,7			0,644–0,769	0,622–0,804	0,597–0,855	0,562–0,949	0,525–1,10	0,475–1,53	0,428–3,02	1/25
1			0,882–1,16	0,840–1,25	0,791–1,38	0,728–1,67	0,663–2,27	0,580–5,95	0,507–∞	1/38
2			1,55–2,84	1,42–3,48	1,27–4,99	1,11–14,8	0,955–∞	0,782–∞	0,648–∞	1/79
∞			6,46–∞	4,55–∞	3,27–∞	2,31–∞	1,71–∞	1,20–∞	0,894–∞	1/∞

AF Nikkor 28mm f/2.8

Nikon Consumer Products Dealer

Focusing distance			Depth of field							Reproduction ratio
			f/2.8	f/4	f/5.6	f/8	f/11	f/16	f/22	
0,3			0,294–0,306	0,292–0,309	0,239–0,313	0,284–0,319	0,279–0,327	0,270–0,341	0,261–0,361	1/7,58
0,4			0,388–0,413	0,383–0,419	0,377–0,427	0,368–0,44	0,357–0,458	0,341–0,492	0,325–0,542	1/11,1
0,5			0,48–0,522	0,472–0,533	0,641–0,547	0,447–0,571	0,430–0,604	0,406–0,671	0,381–0,777	1/14,6
0,7			0,658–0,749	0,641–0,772	0,621–0,806	0,593–0,864	0,561–0,950	0,517–1,15	0,473–1,54	1/21,6
1			0,911–1,11	0,878–1,17	0,838–1,25	0,784–1,41	0,727–1,67	0,650–2,45	0,579–5,86	1/32,0
2			1,65–2,54	1,54–2,88	1,41–3,51	1,26–5,24	1,10–14,1	0,930–∞	0,783–∞	1/66,8
∞			8,96–∞	6,29–∞	4,52–∞	3,19–∞	2,34–∞	1,63–∞	1,21–∞	1/∞

AF Nikkor 35mm f/2

Nikon Consumer Products Dealer

Focusing distance			Depth of field							Reproduction ratio
		f/2	f/2.8	f/4	f/5.6	f/8	f/11	f/16	f/22	
0.9		10 11/16″–10 13/16″	10 11/16″–10 7/8″	10 11/16″–10 7/8″	10 5/8″–10 15/16″	10 9/16″–11″	10 1/2″–11 1/16″	10 3/8″–11 1/4″	10 1/4″–11 7/16″	1/4.9
1		11 7/8″–1′ 1 1/16″	11 7/8″–11′ 1 1/16″	11 3/16″–1′ 1 1/8″	11 3/4″–1′ 3/16″	11 1/16″–1′ 1 5/16″	11 9/16″–1′ 1 7/16″	11 3/8″–1′ 1 5/8″	11 3/16″–1′ 1 15/16″	1/5.8
1.25		1′ 2 13/16″–1′ 3 1/8″	1′ 2 3/4″–1′ 3 3/16″	1′ 2 11/16″–1′ 3 1/4″	1′ 2 9/16″–1′ 3 3/8″	1′ 2 3/8″–1′ 3 5/8″	1′ 2 3/16″–1′ 3 7/8″	1′ 1 7/8″–1′ 4 5/16″	1′ 1 1/2″–1′ 4 7/8″	1/8.0
1.5		1′ 5 3/4″–1′ 6 1/4″	1′ 5 5/8″–1′ 6 5/16″	1′ 5 1/2″–1′ 6 1/2″	1′ 5 5/16″–1′ 6 11/16″	1′ 5 1/16″–1′ 7″	1′ 4 3/4″–1′ 7 7/16″	1′ 4 1/4″–1′ 8 1/4″	1′ 3 11/16″–1′ 9 5/16″	1/10.1
2		1′ 11 1/2″–2′ 8 1/2″	1′ 11 1/4″–2′ 11/16″	1′ 11″–2′ 1 1/16″	1′ 10 5/8″–2′ 1 1/2″	1′ 10 1/8″–2′ 2 1/4″	1′ 9 1/2″–2′ 3 1/4″	1′ 8 9/16″–2′ 5 1/16″	1′ 7 9/16″–2′ 7 3/4″	1/14.4
3		2′ 10 1/16″–3′ 1 3/8″	2′ 10 1/4″–3′ 1 15/16″	2′ 9 1/2″–3′ 2 7/8″	2′ 8 5/8″–3′ 4 1/8″	2′ 7 7/16″–3′ 6 5/16″	2′ 6 1/16″–3′ 9 5/16″	2′ 4″–4′ 3 5/8″	2′ 1 15/16″–5′ 2 15/16″	1/22.9
5		4′ 8 3/16″–5′ 4 3/8″	4′ 6 13/16″–5′ 6 5/16″	4′ 4 7/8″–5′ 9 1/2″	4′ 2 1/2″–6′ 2 1/4″	3′ 11 5/16″–6′ 10 7/8″	3′ 7 15/16″–8′ 1 1/16″	3′ 3 15/16″–11′ 4 15/16″	2′ 11″–23′ 1 1/2″	1/39.8
15		12′ 3″–19′ 4″	11′ 5″–21′ 11″	10′ 4″–27′ 4″	9′ 3″–41′ 2″	7′ 11″–174′ 5″	6′ 9″–8	5′ 5″–8	4′ 5″–8	1/124.5
8		64′–∞	45′ 10″–∞	32′ 2″–∞	23′–∞	16′ 2″–∞	11′ 10″–∞	8′ 3″–∞	6′ 1″–∞	1/∞

AF Nikkor 50mm f/1.4

Focusing distance	Depth of field								Reproduction ratio
	f/1.4	f/2	f/2.8	f/4	f/5.6	f/8	f/11	f/16	
0.45	0.448–0.453	0.446–0.454	0.445–0.455	0.443–0.457	0.440–0.460	0.436–0.465	0.431–0.471	0.424–0.481	1/6.84
0.5	0.497–0.503	0.495–0.505	0.494–0.507	0.491–0.509	0.488–0.513	0.482–0.519	0.476–0.527	0.466–0.541	1/7.83
0.6	0.595–0.605	0.593–0.607	0.590–0.610	0.586–0.614	0.581–0.621	0.573–0.630	0.564–0.642	0.549–0.663	1/9.79
0.7	0.693–0.707	0.690–0.710	0.686–0.714	0.681–0.721	0.673–0.729	0.663–0.743	0.650–0.760	0.629–0.792	1/11.7
0.8	0.791–0.810	0.787–0.814	0.782–0.819	0.774–0.828	0.764–0.840	0.750–0.858	0.733–0.882	0.707–0.927	1/13.7
1.0	0.985–1.02	0.979–1.02	0.970–1.03	0.958–1.05	0.943–1.07	0.920–1.10	0.894–1.14	0.854–1.22	1/17.6
1.2	1.18–1.22	1.17–1.23	1.16–1.25	1.14–1.27	1.12–1.30	1.08–1.35	1.05–1.41	0.991–1.54	1/21.5
1.5	1.46–1.54	1.45–1.55	1.43–1.58	1.40–1.61	1.37–1.66	1.32–1.74	1.26–1.85	1.18–2.08	1/27.3
2	1.94–2.07	1.91–2.1	1.88–2.14	1.83–2.21	1.77–2.30	1.69–2.47	1.59–2.71	1.46–3.23	1/37.0
3	2.86–3.16	2.80–3.23	2.73–3.33	2.62–3.51	2.50–3.76	2.33–4.23	2.16–5.00	1.92–7.24	1/56.4
5	4.61–5.47	4.46–5.70	4.27–6.03	4.02–6.62	3.73–7.62	3.37–9.85	3.01–15.6	2.55–∞	1/95.0
∞	57.2–∞	40.0–∞	28.6–∞	20.1–∞	14.4–∞	10.1–∞	7.35–∞	5.08–∞	1/∞

AF Nikkor 50mm f/1.8

Focusing distance	Depth of field									Reproduction ratio
	f/1.8	f/2	f/2.8	f/4	f/5.6	f/8	f/11	f/16	f/22	
0.45	0.448–0.452	0.447–0.453	0.446–0.454	0.445–0.455	0.443–0.458	0.440–0.461	0.436–0.465	0.430–0.473	0.423–0.482	1/6.64
0.5	0.497–0.503	0.496–0.504	0.495–0.505	0.493–0.507	0.490–0.510	0.486–0.515	0.481–0.521	0.473–0.531	0.464–0.543	1/7.63
0.6	0.595–0.605	0.594–0.606	0.592–0.608	0.589–0.612	0.584–0.617	0.578–0.624	0.570–0.634	0.558–0.650	0.544–0.672	1/9.60
0.7	0.693–0.708	0.692–0.708	0.688–0.712	0.684–0.717	0.677–0.724	0.668–0.736	0.657–0.750	0.640–0.776	0.620–0.809	1/11.55
0.8	0.790–0.811	0.789–0.812	0.784–0.817	0.778–0.824	0.769–0.834	0.757–0.849	0.742–0.870	0.718–0.906	0.693–0.955	1/13.50
1.0	0.983–1.02	0.981–1.02	0.974–1.03	0.963–1.04	0.949–1.06	0.929–1.08	0.905–1.12	0.868–1.19	0.828–1.28	1/17.4
1.2	1.17–1.23	1.17–1.23	1.16–1.24	1.14–1.26	1.12–1.29	1.09–1.33	1.06–1.39	1.01–1.50	0.95–1.65	1/21.3
1.5	1.46–1.54	1.45–1.55	1.44–1.57	1.41–1.60	1.38–1.65	1.33–1.72	1.28–1.82	1.20–2.02	1.12–2.34	1/27.1
2	1.92–2.08	1.92–2.09	1.88–2.13	1.84–2.20	1.78–2.29	1.70–2.44	1.61–2.65	1.48–3.13	1.36–4.00	1/36.8
3	2.82–3.20	2.81–3.22	2.74–3.32	2.64–3.48	2.52–3.73	2.35–4.16	2.18–4.89	1.94–6.89	1.72–13.79	1/56.2
5	4.52–5.60	4.47–5.68	4.29–6.01	4.04–6.58	3.75–7.53	3.40–9.65	3.04–14.92	2.58–186.84	2.20–∞	1/95.0
∞	44–∞	40–∞	29–∞	20–∞	14–∞	10–∞	7–∞	5–∞	4–∞	1/∞

AF Micro Nikkor 55mm f/2.8

Focusing distance	Depth of field								Reproduction ratio
	f/2.8	f/4	f/5.6	f/8	f/11	f/16	f/22	f/32	
0.228	0.228–0.229	0.228–0.229	0.228–0.229	0.228–0.229	0.228–0.229	0.228–0.229	0.228–0.229	0.228–0.229	1.0
0.229	0.229–0.229	0.229–0.229	0.229–0.229	0.229–0.229	0.229–0.229	0.229–0.229	0.228–0.230	0.228–0.230	1/1.1
0.23	0.230–0.230	0.230–0.230	0.230–0.230	0.230–0.230	0.230–0.230	0.230–0.231	0.229–0.231	0.229–0.231	1/1.2
0.235	0.235–0.235	0.235–0.235	0.235–0.235	0.235–0.235	0.234–0.236	0.234–0.236	0.234–0.236	0.233–0.237	1/1.5
0.24	0.240–0.240	0.240–0.240	0.240–0.240	0.240–0.241	0.239–0.241	0.239–0.241	0.239–0.242	0.238–0.242	1/1.6
0.25	0.250–0.250	0.250–0.250	0.250–0.251	0.249–0.251	0.249–0.251	0.249–0.252	0.248–0.252	0.247–0.253	1/1.9
0.27	0.270–0.270	0.269–0.271	0.269–0.271	0.269–0.271	0.268–0.272	0.268–0.273	0.267–0.274	0.265–0.275	1/2.4
0.3	0.299–0.301	0.299–0.301	0.299–0.302	0.298–0.302	0.297–0.303	0.296–0.304	0.294–0.306	0.292–0.309	1/3.0
0.35	0.349–0.351	0.348–0.352	0.347–0.353	0.346–0.354	0.345–0.355	0.343–0.358	0.340–0.361	0.336–0.366	1/4.0
0.4	0.398–0.402	0.397–0.403	0.396–0.404	0.394–0.406	0.392–0.409	0.389–0.412	0.384–0.418	0.378–0.426	1/5.0
0.5	0.496–0.504	0.494–0.506	0.492–0.508	0.489–0.512	0.484–0.517	0.478–0.525	0.470–0.536	0.459–0.553	1/6.9
0.7	0.690–0.710	0.686–0.714	0.681–0.721	0.673–0.730	0.663–0.743	0.649–0.762	0.630–0.792	0.606–0.839	1/10.5
1	0.971–1.024	0.968–1.034	0.956–1.049	0.938–1.071	0.915–1.104	0.885–1.155	0.846–1.237	0.796–1.377	1/16.0
2	1.899–2.118	1.860–2.170	1.807–2.249	1.737–2.371	1.648–2.569	1.537–2.918	1.406–3.622	1.256–5.553	1/34.3
∞	32.2–∞	22.8–∞	16.2–∞	11.5–∞	8.1–∞	5.8–∞	4.1–∞	3.0–∞	1/∞

AF Micro Nikkor 60mm f/2.8

Focusing distance	Depth of field								Reproduction ratio
	f/2.8	f/4	f/5.6	f/8	f/11	f/16	f/22	f/32	
0.219	0.219–0.219	0.218–0.219	0.218–0.219	0.218–0.219	0.218–0.219	0.218–0.219	0.218–0.219	0.218–0.219	1.0
0.22	0.220–0.220	0.219–0.220	0.219–0.220	0.219–0.220	0.219–0.220	0.219–0.220	0.219–0.220	0.219–0.220	1/1.1
0.225	0.225–0.225	0.225–0.225	0.225–0.225	0.225–0.225	0.225–0.225	0.225–0.225	0.224–0.225	0.224–0.225	1/1.3
0.23	0.230–0.230	0.230–0.230	0.230–0.230	0.229–0.230	0.229–0.230	0.229–0.230	0.229–0.230	0.229–0.230	1/1.4
0.235	0.235–0.235	0.234–0.235	0.234–0.235	0.234–0.235	0.234–0.235	0.234–0.235	0.234–0.235	0.234–0.235	1/1.5
0.24	0.239–0.240	0.239–0.240	0.239–0.240	0.239–0.240	0.239–0.240	0.239–0.240	0.239–0.240	0.239–0.240	1/1.7
0.25	0.249–0.250	0.249–0.250	0.249–0.250	0.249–0.250	0.249–0.250	0.249–0.250	0.248–0.251	0.248–0.251	1/1.9
0.27	0.269–0.270	0.269–0.270	0.269–0.270	0.269–0.270	0.269–0.271	0.268–0.271	0.267–0.272	0.267–0.273	1/2.3
0.30	0.299–0.300	0.299–0.300	0.299–0.301	0.298–0.301	0.298–0.302	0.297–0.302	0.296–0.304	0.294–0.305	1/2.8
0.35	0.349–0.351	0.348–0.351	0.348–0.352	0.347–0.352	0.346–0.354	0.344–0.355	0.342–0.358	0.339–0.361	1/3.7
0.40	0.398–0.401	0.397–0.402	0.396–0.403	0.395–0.404	0.393–0.406	0.391–0.409	0.387–0.413	0.382–0.419	1/4.6
0.50	0.496–0.503	0.495–0.504	0.493–0.506	0.491–0.509	0.487–0.513	0.482–0.519	0.475–0.528	0.466–0.541	1/6.3
0.70	0.692–0.708	0.688–0.711	0.684–0.716	0.677–0.724	0.669–0.734	0.657–0.750	0.641–0.773	0.620–0.809	1/9.7
1	0.981–1.020	0.973–1.029	0.963–1.041	0.948–1.059	0.929–1.085	0.903–1.126	0.868–1.189	0.825–1.293	1/14.7
2	1.914–2.096	1.880–2.138	1.835–2.202	1.774–2.298	1.696–2.451	1.159–2.709	1.477–3.189	1.336–4.281	1/31.4
∞	38.3–∞	27.1–∞	19.2–∞	13.6–∞	9.6–∞	6.8–∞	4.9–∞	3.5–∞	1/∞

(Units = Meters)

AF Nikkor 85mm f/1.8

(ft)

Focusing distance	Depth of Field								Reproduction ratio
	f/1.8	f/2	f/2.8	f/4	f/5.6	f/8	f/11	f/16	
3	2'11"-13'16"—3'1/8"	2'11-3/4"—3'3/16"	2'11-11/16"—3'1/4"	2'11-9/16"—3'3/8"	2'11-7/16"—3'1/2"	2'11-1/4"—3'3/4"	2'10-15/16"—3'1-1/16"	2'10-1/2"—3'1-9/16"	1/10.0
4	3'11-5/8"—4'5/16"	3'11-9/16"—4'3/8"	3'11-7/16"—4'1/2"	3'11-3/16"—4'3/4"	3'10-15/16"—4-1-1/16"	3'10-1/2"—4'1-9/16"	3'9-15/16"—4'2-3/16"	3'9-1/8"—4'3-1/4"	1/13.6
6	5'11-1/8"—6'7/8"	5'11"—6'15/16"	5'10-5/8"—6'1-3/8"	5'10-1/16"—6'1-15/16"	5'9-3/8"—6'2-13/16"	5'8-5/16"—6'4-1/16"	5'7-1/16"—6'5-3/4"	5'5-1/16"—6'8-3/4"	1/20.2
8	7'10-3/8"—8'1-5/8"	7'10-3/16"—8'1-13/16"	7'9-1/2"—8'2-9/16"	7'8-7/16"—8'3-3/4"	7'7-1/8"—8'5-3/8"	7'5-1/4"—8'7-7/8"	7'2-15/16"—8'11-1/4"	6'11-7/16"—9'5-5/16"	1/28.2
12	11'8"—12'4"	11'7"—12'4"	11'6"—12'6"	11'3"—12'9"	11'—13'1"	10'8"—13'7"	10'3"—14'4"	9'8"—15'10"	1/42.6
20	19'1"—20'11"	19'—21'1"	18'7"—21'7"	18'1"—22'4"	17'5"—23'5"	16'6"—25'4"	15'6"—28'2"	14'1"—34'9"	1/71.4
∞	393'—∞	354'—∞	253'—∞	177'—∞	126'—∞	88'—∞	64'—∞	44'—∞	1/∞

AF Micro Nikkor 105mm f/2.8

Focusing distance	Depth of field								Reproduction ratio
	f/2.8	f/4	f/5.6	f/8	f/11	f/16	f/22	f/32	
1.0 ft.	1'0"5/16–1'0"5/16	1'0"5/16–1'0"5/16	1'0"5/16–1'0"5/16	1'0"5/16–1'0"3/8	1'0"5/16–1'0"3/8	1'0"5/16–1'0"3/8	1'0"5/16–1'0"3/8	1'0"1/4–1'0"3/8	1/1.0
1.1 ft	1'1"7/16–1'1"1/2	1'1"7/16–1'1"1/2	1'1"7/16–1'1"1/2	1'1"7/16–1'1"1/2	1'1"7/16–1'1"1/2	1'1"7/16–1'1"1/2	1'1"7/16–1'1"1/2	1'1"7/16–1'1"1/2	1/1.5
1.3 ft.	1'3"9/16–1'2"15/16	1'3"9/16–1'2"15/16	1'3"9/16–1'2"15/16	1'3"9/16–1'2"15/16	1'3"9/16–1'2"15/16	1'3"9/16–1'2"15/16	1'3"9/16–1'2"15/16	1'3"9/16–1'2"15/16	1/1.9
1.5 ft.	1'6"9/16–1'5"15/16	1'6"9/16–1'5"15/16	1'6"9/16–1'5"15/16	1'6"9/16–1'5"15/16	1'6"9/16–1'5"15/16	1'6"9/16–1'5"15/16	1'6"1/16–1'5"7/8	1'6"1/16–1'5"7/8	1/2.8
1.8 ft.	1'9"9/16–1'8"15/16	1'9"9/16–1'8"15/16	1'9"9/16–1'8"15/16	1'9"1/16–1'8"7/8	1'9"1/16–1'8"7/8	1'9"1/8–1'8"13/16	1'9"3/16–1'8"3/4	1'9"1/4–1'8"11/16	1/3.5
2.0 ft.	2'0"9/16–1'11"15/16	2'0"9/16–1'11"15/16	2'0"1/16–1'11"7/8	2'0"1/16–1'11"7/8	2'0"1/8–1'11"13/16	2'0"3/16–1'11"3/4	2'0"5/16–1'11"5/8	2'0"7/16–1'11"1/2	1/4.3
2.5 ft.	2'6"1/16–2'5"7/8	2'6"1/8–2'5"7/8	2'6"3/16–2'5"13/16	2'6"1/4–2'5"3/4	2'6"5/16–2'5"5/8	2'6"1/2–2'5"1/2	2'6"11/16–2'5"5/16	2'7"9/16–2'5"9/16	1/5.8
3.0 ft.	3'0"1/8–2'11"13/16	3'0"3/16–2'11"3/4	3'0"1/4–2'11"11/16	3'0"7/16–2'11"9/16	3'0"9/16–2'11"3/8	3'0"7/8–2'11"1/8	3'1"1/4–2'10"13/16	3'1"13/16–2'10"3/8	1/7.3
5.0 ft.	5'0"1/2–4'11"7/16	5'0"3/4–4'11"3/16	5'1"1/8–4'10"7/8	5'1"9/16–4'10"7/16	5'2"5/16–4'9"13/16	5'3"5/16–4'9"9/16	5'4"13/16–4'7"7/8	5'7"1/8–4'6"3/8	1/13.1
10.0 ft.	10'2"-9'9"7/16	10'3"-9'8"3/8	10'5"-9'8"15/16	10'8"-9'5"9/16	10'11"-9'2"5/16	11'5"-8'10"3/4	12'2"-8'6"1/8	13'5"-8'0"1/4	1/27.6
	384'- ∞	271'- ∞	192'-∞	136'-∞	96'-∞	68'-∞	48'-∞	34'-∞	1/

(Units = Feet)

AF Nikkor 180mm f/2.8 ED-IF

Focusing distance		Depth of field							Reproduction ratio
		f/2.8	f/4	f/5.6	f/8	f/11	f/16	f/22	
1,5		1,50–1,50	1,49–1,51	1,49–1,51	1,49–1,51	1,48–1,52	1,47–1,53	1,46–1,54	1/6,8
1,7		1,69–1,71	1,69–1,71	1,69–1,71	1,68–1,72	1,68–1,73	1,67–1,74	1,65–1,75	1/7,9
2		1,99–2,01	1,99–2,01	1,98–2,02	1,97–2,03	1,96–2,04	1,95–2,05	1,93–2,08	1/9,6
2,5		2,49–2,52	2,48–2,52	2,47–2,53	2,46–2,54	2,44–2,56	2,42–2,59	2,39–2,63	1/12,3
3		2,98–3,02	2,97–3,03	2,96–3,05	2,94–3,06	2,91–3,09	2,88–3,13	2,83–3,19	1/15,1
4		3,96–4,04	3,94–4,06	3,92–4,08	3,89–4,12	3,84–4,17	3,78–4,25	3,70–4,36	1/20,7
5		4,93–5,07	4,91–5,10	4,87–5,14	4,82–5,19	4,75–5,28	4,65–5,41	4,52–5,60	1/26,2
6		5,90–6,10	5,87–6,14	5,81–6,20	5,74–6,29	5,64–6,42	5,50–6,61	5,32–6,90	1/31,8
8		7,83–8,18	7,76–8,26	7,66–8,37	7,53–8,53	7,36–8,77	7,12–9,14	6,81–9,72	1/42,9
12		11,6–12,4	11,5–12,6	11,2–12,9	11,0–13,3	10,6–13,9	10,1–14,8	9,5–16,5	1/65,1
20		18,9–21,2	18,5–21,8	18,0–22,6	17,2–23,8	16,3–25,9	15,2–29,6	13,8–36,9	1/109,6
∞		344–∞	243–∞	172–∞	122–∞	86–∞	61–∞	43–∞	1/∞

AF Nikkor 300mm f/2.8 ED-IF

Focusing distance		Depth of field							Reproduction ratio
		f/2.8	f/4	f/5.6	f/8	f/11	f/16	f/22	
3		2,99–3,01	2,99–3,01	2,99–3,01	2,98–3,02	2,97–3,03	2,96–3,04	2,95–3,06	1/8,4
4		3,99–4,01	3,98–4,02	3,97–4,03	3,96–4,04	3,95–4,05	3,92–4,08	3,90–4,11	1/11,7
5		4,98–5,02	4,97–5,03	4,96–5,04	4,94–5,06	4,92–5,09	4,88–5,13	4,83–5,18	1/15,0
6		5,97–6,03	5,95–6,05	5,94–6,07	5,91–6,09	5,87–6,13	5,82–6,19	5,76–6,27	1/18,4
7		6,96–7,05	6,94–7,07	6,91–7,09	6,87–7,13	6,83–7,18	6,75–7,27	6,66–7,38	1/21,7
8		7,94–8,06	7,92–8,09	7,88–8,12	7,83–8,18	7,77–8,24	7,67–8,36	7,56–8,50	1/25,0
10		9,91–10,1	9,87–10,1	9,81–10,2	9,73–10,3	9,64–10,4	9,48–10,6	9,30–10,8	1/31,7
12		11,9–12,1	11,8–12,2	11,7–12,3	11,6–12,4	11,5–12,6	11,3–12,9	11,0–13,2	1/38,4
15		14,8–15,2	14,7–15,3	14,6–15,5	14,4–15,7	14,2–15,9	13,8–16,4	13,4–17,0	1/48,4
20		19,6–20,4	19,4–20,6	19,2–20,8	18,9–21,2	18,6–21,7	18,0–22,6	17,3–23,7	1/65,0
30		29,1–30,9	28,8–31,4	28,3–31,9	27,6–32,8	26,8–34,1	25,6–36,3	24,3–39,4	1/98,4
70		65,3–75,4	63,5–78,0	61,2–81,7	58,1–88,1	54,6–97,6	49,7–119	44,8–162	1/231,7
∞		965–∞	676–∞	483–∞	338–∞	246–∞	169–∞	123–∞	1/∞

(Units = Meters)

AF Nikkor 300mm f/4 ED-IF

Nikon Advanced Systems Dealer

Focusing distance	Depth of field							Reproduction ratio
	f/4	f/5.6	f/8	f/11	f/16	f/22	f/32	
2.5	2.49-2.51	2.49-2.51	2.49-2.51	2.48-2.52	2.47-2.53	2.46-2.54	2.45-2.56	1/7.0
3	2.99-3.01	2.99-3.01	2.98-3.02	2.97-3.03	2.96-3.04	2.94-3.06	2.92-3.09	1/8.6
3.5	3.49-3.51	3.48-3.52	3.47-3.53	3.46-3.54	3.44-3.56	3.42-3.58	3.39-3.62	1/10.3
4	3.98-4.02	3.97-4.03	3.96-4.04	3.95-4.06	3.92-4.08	3.89-4.11	3.85-4.17	1/12.0
5	4.97-5.03	4.96-5.05	4.94-5.07	4.91-5.09	4.87-5.13	4.83-5.19	4.76-5.27	1/15.3
6	5.95-6.05	5.93-6.07	5.91-6.10	5.87-6.13	5.82-6.20	5.75-6.28	5.64-6.41	1/18.6
7	6.93-7.07	6.91-7.09	6.87-7.13	6.82-7.19	6.75-7.27	6.66-7.38	6.51-7.57	1/22.0
8	7.91-8.09	7.88-8.12	7.83-8.18	7.77-8.25	7.67-8.37	7.55-8.51	7.36-8.77	1/25.3
10	9.86-10.1	9.81-10.2	9.73-10.3	9.63-10.4	9.48-10.6	9.30-10.8	9.01-11.3	1/32.0
15	14.7-15.3	14.6-15.5	14.4-15.7	14.2-15.9	13.8-16.4	13.4-17.0	12.8-18.1	1/48.7
30	28.8-31.4	28.3-31.9	27.6-32.9	26.8-34.1	25.6-36.3	24.2-39.5	22.3-46.2	1/98.7
∞	675-∞	483-∞	338-∞	246-∞	169-∞	123-∞	85-∞	1/∞

(Units = Meters)

Depth - of - Field Scale for Zoom Lenses

35mm - 105mm

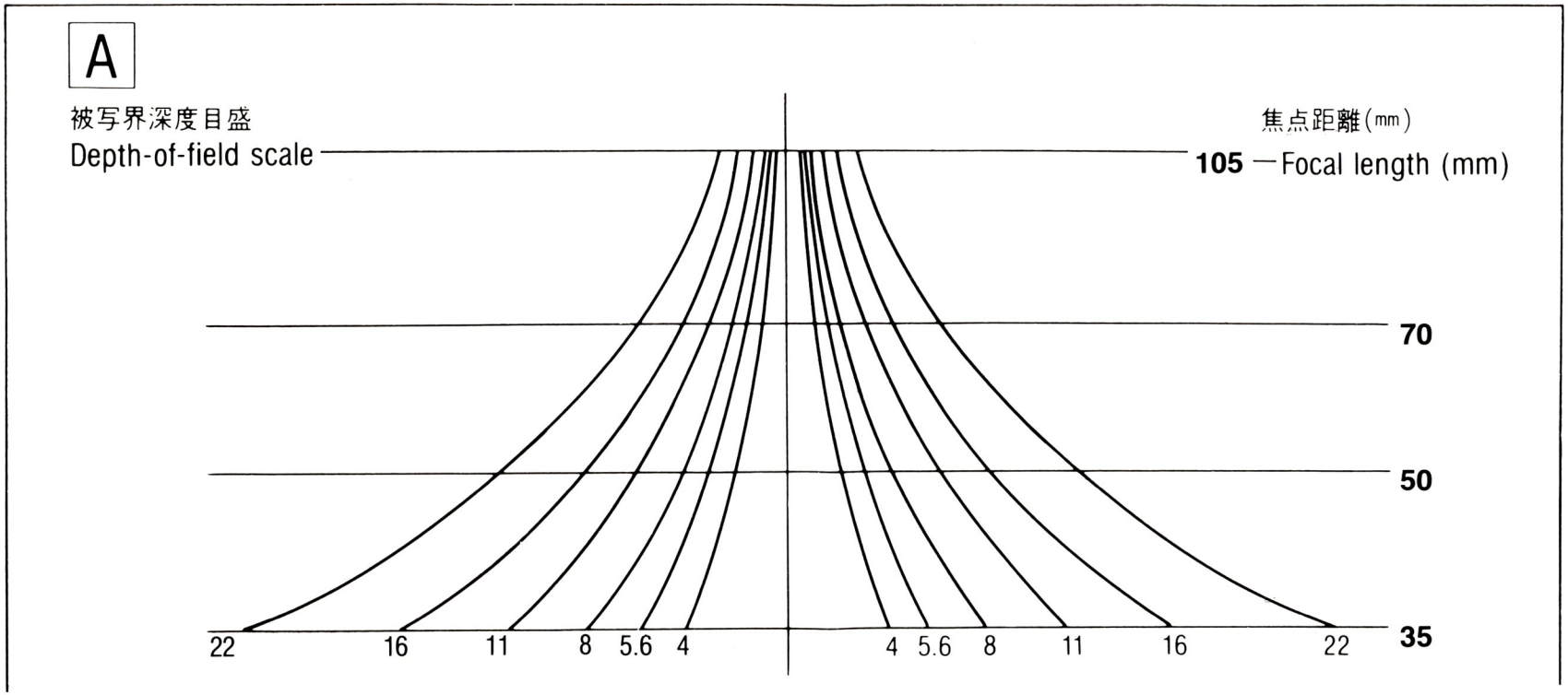

To use depth-of-field scale

1. Remove scale B from page 101 (extra scales are provided).
2. Place scale B over scale A so the bottom edge of scale B is aligned with the focal length in use and the distance is aligned with the central indicator line of scale A.
3. Read the scale B numbers that correspond to the aperture in use. For example, if the lens is prefocused at 3m with the focal length at 35mm and the aperture at 1/16 the depth of field will be from approx. 5 feet to infinity.

INSERT SUBJECT-DISTANCE SCALES INTO SLOTS FOR STORAGE.

Depth - of - Field Scale for Zoom Lenses

75mm - 300mm

C

被写界深度目盛

Depth-of-field scale

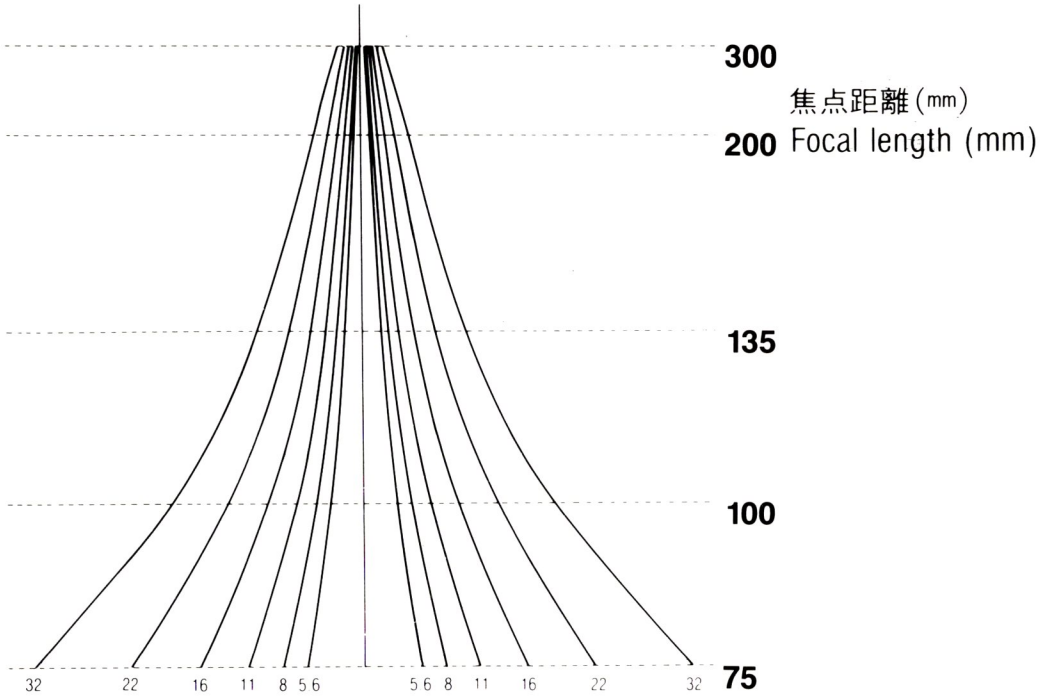

To use depth-of-field scale

1. Remove scale D from page 102 (extra scales are provided).
2. Place scale D over scale C so the bottom edge of scale D is aligned with the focal length in use, and the distance is aligned with the central indicator line of scale C.
3. Read the scale D numbers that correspond to the aperture in use. For example, if the lens is pre-focused at 5m with the focal length at 75mm and the aperture at f/16, the depth of field will be from approx. 12 feet to 30 feet.

INSERT SUBJECT-DISTANCE SCALES INTO SLOTS FOR STORAGE

B

撮影距離目盛
Subject-distance scale

m	∞	7	4	3	2.5	2		1.4
ft.	∞	20		10	8	6	5	

B

撮影距離目盛
Subject-distance scale

m	∞	7	4	3	2.5	2		1.4
ft.	∞	20		10	8	6	5	

B

撮影距離目盛
Subject-distance scale

m	∞	7	4	3	2.5	2		1.4
ft.	∞	20		10	8	6	5	

D

撮影距離目盛
Subject-distance scale

m	∞		10	7	5	4	3
ft	∞		30	20	15	12	10

D

撮影距離目盛
Subject-distance scale

m	∞		10	7	5	4	3
ft	∞		30	20	15	12	10

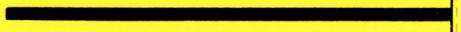

D

撮影距離目盛
Subject-distance scale

m	∞		10	7	5	4	3
ft	∞		30	20	15	12	10

Enlarging Lenses

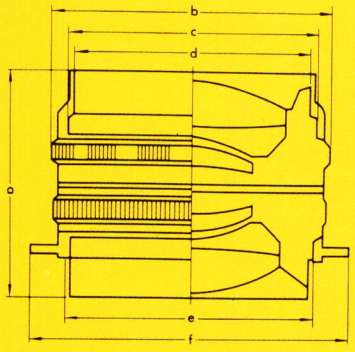

Dimension Reference Drawing

This drawing for common reference for lens and mounting dimensions as provided in accompanying specifications.

EL-Nikkor 40mm f/4N

Nikon CONSUMER PRODUCTS DEALER

Product Number:	209
Focal length:	40.1mm
Maximum aperature ratio	1:4
Covering power:	52°
Optical construction:	6 elements in 4 groups
Standard magnification:	10x
Usable magnification range:	5x-30x
Aperture range:	f/4-f/22
Correction wavelength range:	380-700nm
Original size:	43.2mm diameter
Original format size:	24mm x 36mm
Dimensions (b x a):	51mm dia. x 42mm (2.0″ x 1.7″)
Weight:	100g (3.5 oz.)
Attachment size (d):	40.5mm diameter (p = 0.5mm)
Rear mount size (e):	39mm diameter (p = 1/26″)

EL-Nikkor 50mm f/2.8N

Nikon CONSUMER PRODUCTS DEALER

Product Number:	210
Focal length:	52.0mm
Maximum aperture ratio:	1:2.8
Covering power:	41°
Optical construction:	6 elements in 4 groups
Standard magnification:	8x
Usable magnification range:	2x-20x
Aperture range:	f/2.8-f/16
Correction wavelength range:	380-700nm
Original size:	43.2mm diameter
Original format size:	24mm x 36mm
Dimensions (b x a):	51mm dia. x 39mm (2.0″ x 1.5″)
Weight:	105g (3.7 oz.)
Attachment size (d):	40.5mm diameter (p = 0.5mm)
Rear mount size (e):	39mm diameter (p = 1/26″)

EL-Nikkor 63mm f/2.8N

Product Number:	211
Focal length:	62.9mm
Maximum aperture ratio:	1:2.8
Covering power:	41°
Optical construction:	6 elements in 4 groups
Standard magnification:	8x
Usable magnification range:	2x-20x
Aperture range:	f/2.8 - f/16
Correction wavelength range:	380-700nm
Original size:	55.2mm diameter
Original format size:	32mm x 45mm
Dimensions:	51mm dia. x 42.5mm (2.0″ x 1.7″)
Weight:	120g (4.2 oz.)
Attachment size:	(d): 40.5mm diameter (p = 0.5mm)
Rear mount size:	(e): 39mm diameter (p = 1/26″)

EL-Nikkor 75mm f/4N

Product Number:	224
Focal length:	74.9mm
Maximum aperture ratio:	1:4
Covering power:	48°
Optical construction:	4 elements in 3 groups
Standard magnification:	5x
Usable magnification range:	2x-10x
Aperture range:	f/4-f/22
Correction wavelength range:	380-700nm
Original size:	80mm diameter
Original format size:	60mm x 60mm
Dimensions:	51mm dia. x 33mm (2.0″ x 1.3″)
Weight:	90g (3.2 oz.)
Attachment size (d):	40.5mm diameter (p = 0.5mm)
Rear mount size (e):	39mm diameter (P = 1/26″)

EL-Nikkor 80mm f/5.6N

Product Number:	212
Focal length:	80.2mm
Maximum aperture ratio:	1:5.6
Covering power:	56°
Optical construction:	6 elements in 4 groups
Standard magnification:	5x
Usable magnification range:	2x-15x
Aperture range:	f/5.6-f/32
Correction wavelength range:	380-700nm
Original size:	95mm diameter
Original format size:	60mm x 70mm
Dimensions (b x a):	51mm dia. x 38.5mm (2.0″ x 1.5″)
Weight:	100g (3.5 oz.)
Attachment size (d):	40.5mm diameter (p = 0.5mm)
Rear mount size (e):	39mm diameter (p = 1/26″)

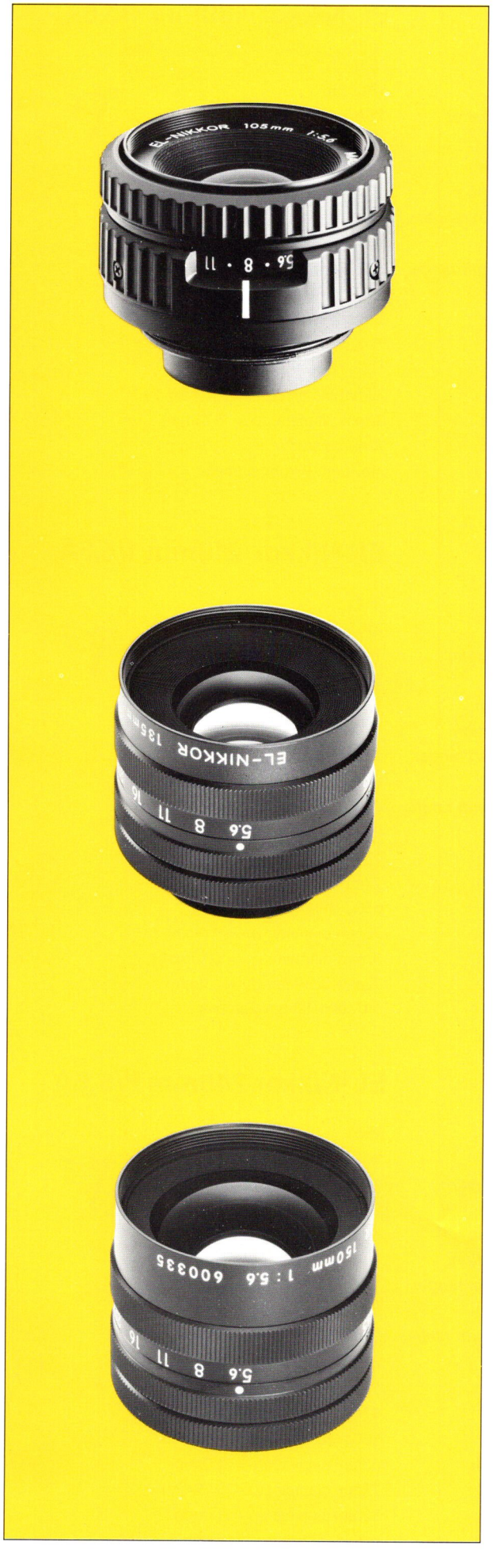

EL-Nikkor 105mm f/5.6N

Product Number:	213
Focal length:	105.5mm
Maximum aperture ratio:	1:5.6
Covering power:	51°
Optical construction:	6 elements in 4 groups
Standard magnification:	5x
Usable magnification range:	2x-10x
Aperture range:	f/5.6-f/32
Correction wavelength range:	380-700nm
Original size:	120mm diameter
Original format size:	60mm x 90mm
Dimensions (b x a):	51mm dia. x 40mm (2.0″ x 1.6″)
Weight:	110g (3.9 oz.)
Attachment size (d):	40.5mm diameter (p = 0.5mm)
Rear mount size (e):	39mm diameter (p = 1/26″)

EL-Nikkor 135mm f/5.6A

Product Number:	251
Focal length:	135mm
Maximum aperture ratio:	1:5.6
Covering power:	53°
Optical construction:	6 elements in 4 groups
Standard magnification:	5x
Usable magnification range:	2x-10x
Aperture range:	f/5.6-f/45
Correction wavelength range:	380-700nm
Original size:	160mm diameter
Original format size:	90mm x 120mm (4″ x 5″)
Dimensions (b x a):	56mm dia. x 47.5mm (2.2″ x 1.9″)
Weight:	190g (6.7 oz.)
Attachment size (d):	52mm diameter (p = 0.75mm)
Rear mount size (e):	39mm diameter (p = 1/26″); 50mm diameter (p = 0.75mm)

EL-Nikkor 150mm f/5.6A

Product Number:	252
Focal length:	149.6mm
Maximum aperture ratio:	1:5.6
Covering power:	51°
Optical construction:	6 elements in 4 groups
Standard magnification:	4x
Usable magnification range:	2x-8x
Aperture range:	f/5.6-f/45
Correction wavelength range:	380-700nm
Original size:	180mm diameter
Original format size:	100mm x 130mm (4″ x 5″)
Dimensions (b x a):	56mm dia. x 50.2mm (2.2″ x 2.0″)
Weight:	210g (7.4 oz.)
Attachment size (d):	52mm diameter (p = 0.75mm)
Rear mount size (e):	39mm diameter (p = 1/26″); 50mm diameter (p = 0.75mm)

EL-Nikkor 180mm f/5.6A

Product Number:	253
Focal length:	179.6mm
Maximum aperture ratio:	1:5.6
Covering power:	54°
Optical construction:	6 elements in 4 groups
Standard magnification:	4x
Usable magnification range:	2x-8x
Aperture range:	f/5.6-f/45
Correction wavelength range:	380-700nm
Original size:	230mm diameter
Original format size:	130mm x 180mm (5″ x 7″)
Dimensions (b x a):	77mm dia. x 62mm (3.0″ x 2.4″)
Weight:	455g (16.0 oz.)
Front mount size:	72mm diameter (p = 1.0mm)
Attachment size (d):	67mm diameter (p = 0.75mm)
Rear mount size (e):	72mm diameter (p = 1.0mm)
Mounting flange:	provided; 98mm diameter

EL-Nikkor 210mm f/5.6A

Product number:	254
Focal length:	210.5mm
Maximum aperture ratio:	1:5.6
Covering power:	54°
Optical construction:	6 elements in 4 groups
Standard magnification:	4x
Usable magnification range:	2x-8x
Aperture range:	f/5.6-f/45
Correction wavelength range:	380-700nm
Original size:	270mm diameter
Original format size:	130mm x 210mm (5″ x 7″)
Dimensions (b x a):	77mm dia. x 70mm (3.0″ x 2.8″)
Weight:	550g (19.4 oz.)
Front mount size (c):	72mm diameter (p = 1.0mm)
Attachment size (d):	67mm diameter (p = 0.75mm)
Rear mount size (e):	72mm diameter (p = 1.0mm)
Mounting Flange:	provided; 98mm diameter

EL-Nikkor 240mm F/5.6A

Product number:	255
Focal length:	241.8 mm
Maximum aperture ratio:	1:5.6
Covering power:	57°
Optical construction:	6 elements in 4 groups
Standard magnification:	4x
Usable magnification range:	1x-8x
Aperture range:	f/5.6-f/45
Correction wavelength range:	380-700nm
Original size:	330mm diameter
Original format size:	180mm x 240mm (8″ x 10″)
Dimensions (b x a):	97mm dia. x 77.5mm (3.8″ x 3″)
Weight:	860g (30.1 oz)
Front mount size (c):	82mm diameter (p = 1.0mm)
Attachment size (d):	77mm diameter (p = 0.75mm)
Rear mount size (e):	82mm diameter (p = 1.0mm)
Mounting flange:	provided; 108mm diameter

EL-Nikkor 300mm f/5.6 A

Product number:	256
Focal length:	300 mm
Maximum aperture ratio:	1:5.6
Covering power:	52°
Optical construction:	6 elements in 4 groups
Standard magnification:	2x
Usable magnification range:	1x-8x
Aperture range:	f/5.6-f/45
Correction wavelength range:	380-700nm
Original size:	410mm diameter
Original format size:	270mm x 330mm (10″ x 12″)
Dimensions (b x a):	117mm dia. x 97mm (4.6″ x 3.8″)
Weight:	1190g (41.7 oz)
Front mount size (c):	90mm diameter (p = 1.0mm)
Attachment size (d):	86mm diameter (p = 1.0mm)
Rear mount size (e):	90mm diameter (p = 1.0mm)
Mounting flange:	provided; 121mm diameter

Nikon Advanced Systems Dealer

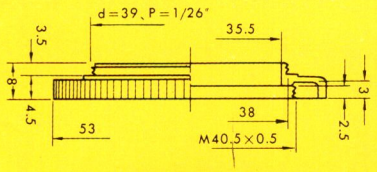

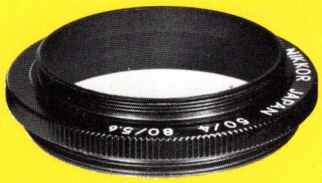

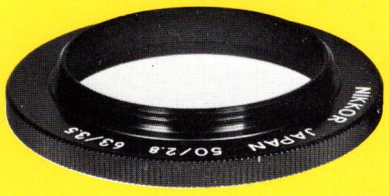

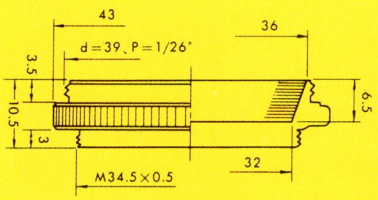

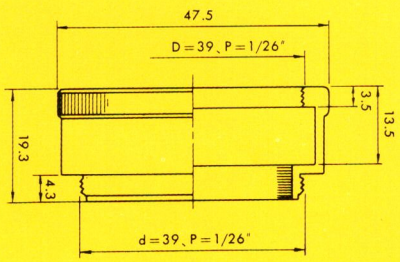

Reversing Adapters

Product Number	2641
Reversing adapter for El-Nikkor (40.5mm dia):	40mm f/4N, 50mm, f/2.8N, 63mm f/2 8N, 75mm f/4N, 80mm f/5.6N, 105mm f/5.6N lenses
Product Number:	2640
Reversing ring for earlier El-Nikkor (34.5mm dia.):	For 75mm f/4 lens
Product Number:	2654
Reverse mounting ring for El-Nikkor:	for 135mm f/5.6, 150mm f/5.6 lenses
Product Number:	2655
Lens mounting adaptor:	for 50mm El-Nikkor

Lens Caps

Product number	577
Lens cap, (40.5 mm dia.):	For 40mm f/4N, 50mm f/2.8N, 63mm f/2.8N, 75mm f/4N, 80mm f/5.6N, 105mm f/5.6N lenses
Product Number:	581
Lens cap, (52mm dia.):	For 135mm f/5.6A, 150mm f/5.6A lenses
Product Number:	576
Lens cap for earlier El-Nikkor (43mm dia.):	For 135mm f/5.6 lens
Product Number:	574
Lens casp (34.5mm dia.):	for El Nikkor (Repl.)

Extension Ring

Product number	2642
Extension ring for El-Nikkor:	50mm—135mm

Case

(Not Pictured)

Product number	461 Plastic Case f/50mm El-Nikkor (Repl.)

Large Format Lenses

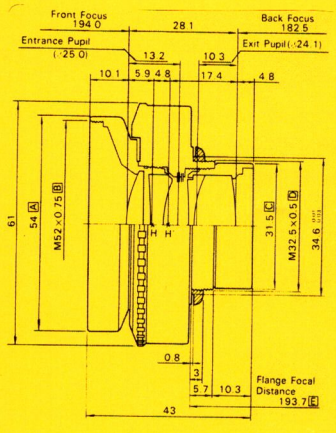

Nikkor-M 200mm f/8

Product number:	1322
Focal length:	200mm
Maximum aperture:	f/8
Optical construction:	4 elements in 3 groups
Aperture range:	f/8-f/64
Covering power (f/8):	45°
Covering power (f/22):	55°
Image circle (f/8):	166mm diameter
Image circle (f/22):	210mm diameter (5"x7")
Shutter:	Copal no. 0, designed exclusively for Nikon
Shutter speeds:	1-1/500 sec., T, B
Flash sync socket:	X contact
Front mount size (A):	54mm diameter
Attachment size (B):	52mm dia. x 0.75mm (P)
Rear mount size (C):	31.5mm diameter
Flange attachment size (D):	32.5mm dia. x 0.5mm (P)
Flange focal distance (E):	193.7mm
Overall length (F):	43mm (1.7")
Weight:	180g (6.3 oz.)

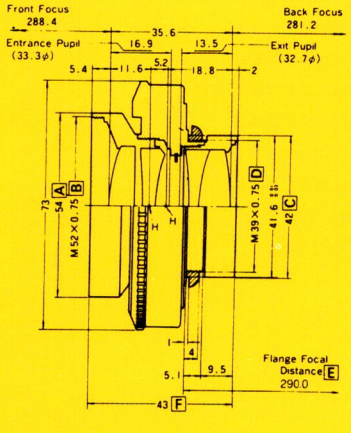

Nikkor-M 300mm f/9

Product number:	1321
Focal length:	300mm
Maximum aperture:	f/9
Optical construction:	4 elements in 3 groups
Aperture range:	f/9-f/128
Covering power (f/9):	55°
Covering power (f/22):	57°
Image circle (f/9):	312mm diameter
Image circle (f/22):	325mm diameter (8"x10")
Shutter:	Copal no. 1, designed exclusively for Nikon
Shutter speeds:	1-1/400 sec., T, B
Flash sync socket:	X contact
Front mount size (A):	54mm diameter
Attachment size (B):	52mm dia. x 0.75mm (P)
Rear mount size (C):	42mm diameter
Flange attachment size (D):	39mm dia. x 0.75mm (P)
Flange focal distance (E):	290.0mm
Overall length (F):	43mm (1.7")
Weight:	290g (10.2 oz.)

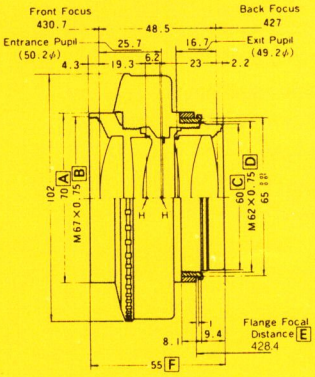

Nikkor-M 450mm f/9

Product number:	1323
Focal length:	450mm
Maximum aperture:	f/9
Optical construction:	4 elements in 3 groups
Aperture range:	f/9-f/128
Covering power (f/9):	50°
Covering power (f/22):	52°
Image circle (f/9):	420mm diameter
Image circle (f/22):	440mm diameter (10''x12'')
Shutter:	Copal no. 3, designed exclusively for Nikon
Shutter speeds:	1-1/125 sec., T, B
Flash sync socket:	X contact
Front mount size (A):	70mm diameter
Attachment size (B):	67mm dia. x 0.75mm (P)
Rear mount size (C):	60mm diameter
Flange attachment size (D):	62mm dia. x 0.75mm (P)
Flange focal distance (E):	428.4mm
Overall length (F):	55mm (2.2')
Weight:	640g (22.6 oz.)

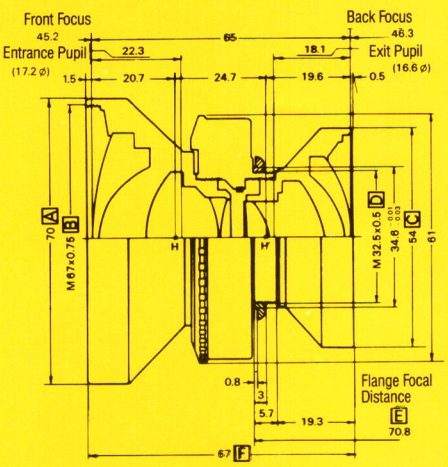

Nikkor-SW 65mm f/4

Product number:	1341
Focal length:	65mm
Maximum aperture:	f/4
Optical construction:	7 elements in 4 groups
Aperture range:	f/4-f/45
Covering power (f/4):	80°
Covering power (f/16):	105°
Image circle (f/4):	110mm diameter
Image circle (f/16):	170mm diameter (4''x5'')
Shutter:	Copal no. 0, designed exclusively for Nikon
Shutter speeds:	1-1/500 sec., T, B
Flash sync socket:	X contact
Front mount size (A):	70mm diameter
Attachment size (B):	67mm dia. x 0.75mm (P)
Rear mount size (C):	54mm diameter
Flange attachment size (D):	32.5mm dia. x 0.5mm (P)
Flange focal distance (E):	70.8mm
Overall length (F):	67mm (2.6'')
Weight:	370g (13.1 oz.)

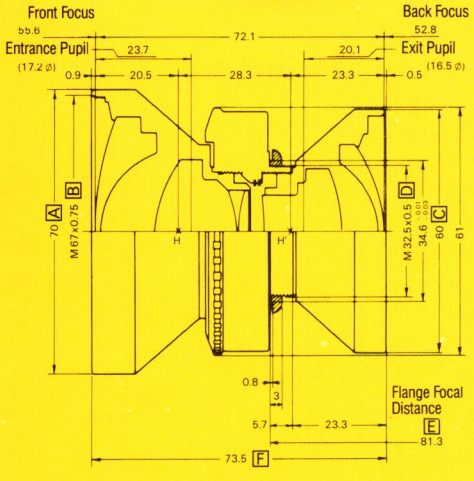

Nikkor-SW 75mm f/4.5

Product number:	1343
Focal length:	75mm
Maximum aperture:	f/4.5
Optical construction:	7 elements in 4 groups
Aperture range:	f/4-f/45
Covering power (f/4.5):	80°
Covering power (f/16):	106°
Image circle (f/4.5):	126mm diameter
Image circle (f/16):	200mm diameter (120mm x 165mm)
Shutter:	Copal no. 0, designed exclusively for Nikon
Shutter speeds:	1-1/500 sec., T, B
Flash sync socket:	X contact
Front mount size (A):	70mm diameter
Attachment size (B):	67mm dia. x 0.75mm (P)
Rear mount size (C):	60mm diameter
Flange attachment size (D):	32.5mm dia. x 0.5mm (P)
Flange focal distance (E):	81.3mm
Overall length (F):	73.5mm (2.9")
Weight:	420g (14.8 oz.)

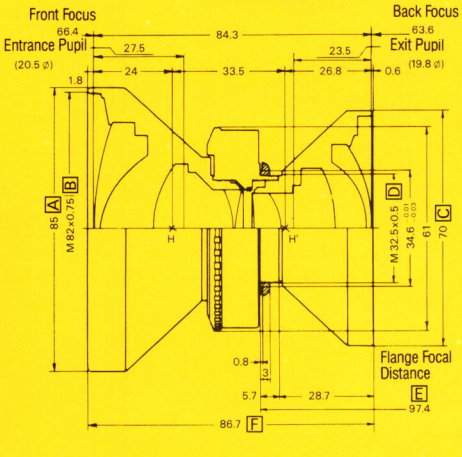

Nikkor-SW 90mm f/4.5

Product number:	1345
Focal length:	90mm
Maximum aperture:	f/4.5
Optical construction:	7 elements in 4 groups
Aperture range:	f/4.5-f/64
Covering power (f/4.5):	80°
Covering power (f/16):	105°
Image circle (f/4.5):	154mm diameter
Image circle (f/16):	235mm diameter (5"x7")
Shutter:	Copal no. 0, designed exclusively for Nikon
Shutter speeds:	1-1/500 sec., T, B
Flash sync socket:	X contact
Front mount size (A):	85mm diameter
Attachment size (B):	82mm dia. x 0.75mm (P)
Rear mount size (C):	70mm diameter
Flange attachment size (D):	32.5mm dia. x 0.5mm (P)
Flange focal distance (E):	97.4mm
Overall length (F):	86.7mm (3.4")
Weight:	600g (21.2 oz.)

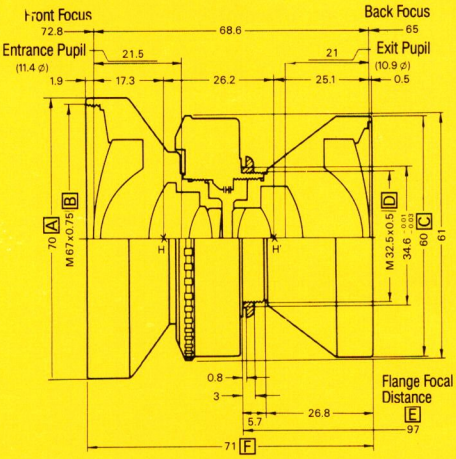

Nikkor-SW 90mm f/8

Product name:	1344
Focal length:	90mm
Maximum aperture:	f/8
Optical construction:	8 elements in 4 groups
Aperture range:	f/8-f/64
Covering power (f/8):	80°
Covering power (f/22):	105°
Image circle (f/8):	154mm diameter
Image circle (f/22):	235mm diameter (5''x7'')
Shutter:	Copal no. 0, designed exclusively for Nikon
Shutter speeds:	1-1/500 sec., T, B
Flash sync socket:	X contact
Front mount size (A):	70mm diameter
Attachment size (B):	67mm dia. x 0.75mm (P)
Rear mount size (C):	60mm diameter
Flange attachment size (D):	32.5mm dia. x 0.5mm (P)
Flange focal distance (E):	97.0mm
Overall length (F):	71mm (2.8'')
Weight:	360g (12.7 oz.)

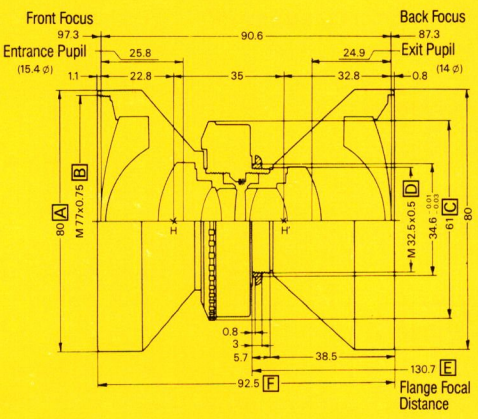

Nikkor-SW 120mm f/8

Product number:	1346
Focal length:	120mm
Maximum aperture:	f/8
Optical construction:	8 elements in 4 groups
Aperture range:	f/8-f/64
Covering power (f/8):	80°
Covering power (f/22):	105°
Image circle (f/8):	200mm diameter
Image circle (f/22):	312mm diameter (8''x 10'')
Shutter:	Copal no. 0, designed exclusively for Nikon
Shutter speeds:	1-1/500 sec., T, B
Flash sync socket:	X contact
Front mount size (A):	80mm diameter
Attachment size (B):	77mm dia. x 0.75mm (P)
Rear mount size (C):	80mm diameter
Flange attachment size (D):	32.5mm dia. x 0.5mm (P)
Flange focal distance (E):	130.7mm
Overall length (F):	92.5mm (3.6'')
Weight:	610g (21.5 oz.)

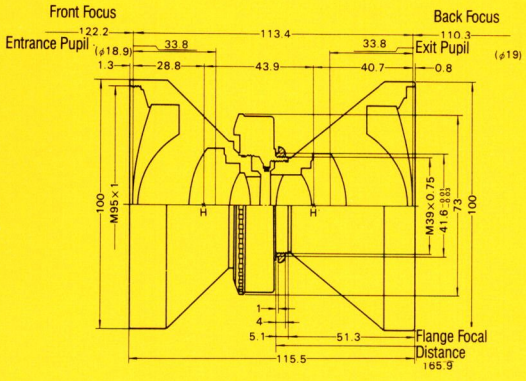

Nikkor-SW 150mm f/8

Product number:	1351
Focal length:	150mm
Maximum aperture:	f/8
Optical construction:	8 elements in 4 groups
Aperture range:	f/8-f/64
Covering power (f/8):	80°
Covering power (f/22):	106°
Image circle (f/8):	253mm diameter
Image circle (f/22):	400mm diameter (10''x12'')
Shutter:	Copal no. 1, designed exclusively for Nikon
Shutter speeds:	1-1/400 sec., T, B
Flash sync socket:	X contact
Front mount size (A):	100mm diameter
Attachment size (B):	95mm dia. x 1mm (P)
Rear mount size (C):	100mm diameter
Flange attachment size (D):	39mm dia. x 0.75mm (P)
Flange focal distance (E):	165.9mm
Overall length (F):	115.5mm (4.5'')
Weight:	1,050g (37.0 oz.)

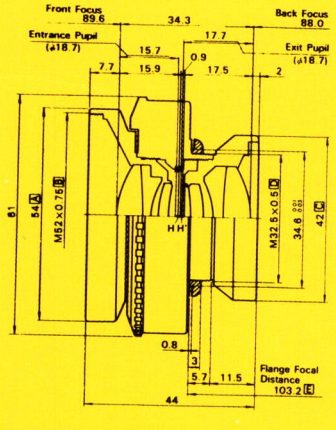

Nikkor-W 105mm f/5.6

Product name:	1309
Focal length:	105mm
Maximum aperture:	f/5.6
Optical construction:	6 elements in 4 groups
Aperture range:	f/5.6-f/45
Covering power (f/5.6):	60°
Covering power (f/22):	73°
Image circle (f/5.6):	121mm diameter
Image circle (f/22):	155mm diameter (4''x5'')
Shutter:	Copal no. 0, designed exclusively for Nikon
Shutter speeds:	1-1/500 sec., T, B
Flash sync socket:	X contact
Front mount size (A):	54mm diameter
Attachment size (B):	52mm dia. x 0.75mm (P)
Rear mount size (C):	42mm diameter
Flange attachment size (D):	32.5mm dia. x 0.5mm (P)
Flange focal distance (E):	103.2mm
Overall length (F):	44mm (1.7'')
Weight:	185g (6.6 oz.)

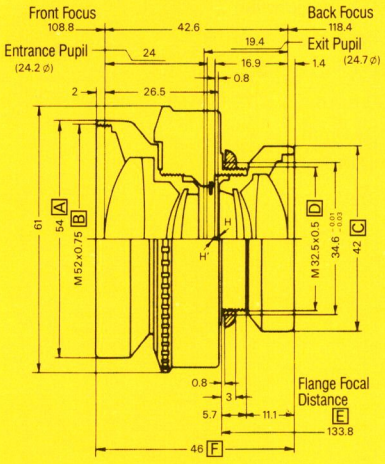

Nikkor-W 135mm f/5.6

Product number:	1312
Focal length:	135mm
Maximum aperture:	f/5.6
Optical construction:	6 elements in 4 groups
Aperture range:	f/5.6-f/64
Covering power (f/5.6):	60°
Covering power (f/22):	73°
Image circle (f/5.6):	156mm diameter
Image circle (f/22):	200mm diameter (120mm x 165mm)
Shutter:	Copal no. 0, designed exclusively for Nikon
Shutter speeds:	1-1/500 sec., T, B
Flash sync socket:	X contact
Front mount size (A):	54mm diameter
Attachment size (B):	52mm dia. x 0.75mm (P)
Rear mount size (C):	42mm diameter
Flange attachment size (D):	32.5mm dia. x 0.5mm (P)
Flange focal distance (E):	133.8mm
Overall length (F):	46mm (1.8")
Weight:	200g (7.1 oz.)

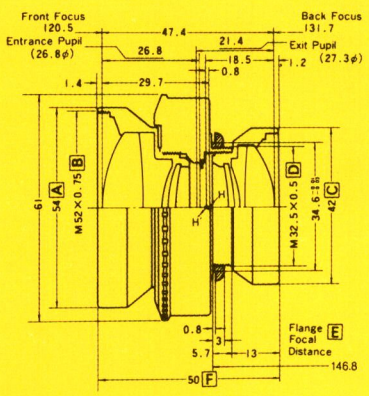

Nikkor-W 150mm f/5.6

Product number:	1314
Focal length:	150mm
Maximum aperture:	1:5.6
Optical construction:	6 elements in 4 groups
Aperture range:	f/5.6-f/64
Covering power (f/5.6):	60°
Covering power (f/22):	70°
Image circle (f/5.6):	174mm diameter
Image circle (f/22):	210mm diameter (5"x7")
Shutter:	Copal no. 0, designed exclusively for Nikon
Shutter speeds:	1-1/500 sec., T, B
Flash sync socket:	X contact
Front mount size (A):	54mm diameter
Attachment size (B):	52mm dia. x 0.75mm (P)
Rear mount size (C):	42mm diameter
Flange attachment size (D):	32.5mm dia. x 0.5mm (P)
Flange focal distance (E):	146.8mm
Overall length (F):	50mm (2.0")
Weight:	230g (8.1 oz.)

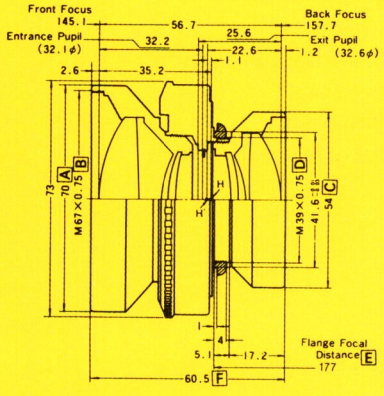

Nikkor-W 180mm f/5.6

Product name:	1316
Focal length:	180mm
Maximum aperture:	f/5.6
Optical construction:	6 elements in 4 groups
Aperture range:	f/5.6-f/64
Covering power (f/5.6):	60°
Covering power (f/22):	70°
Image circle (f/5.6):	208mm diameter
Image circle (f/22):	253mm diameter (5"x7")
Shutter:	Copal no. 1, designed exclusively for Nikon
Shutter speeds:	1-1/400 sec., T, B
Flash sync socket:	X contact
Front mount size (A):	70mm diameter
Attachment size (B):	67mm dia. x 0.75mm (P)
Rear mount size (C):	54mm diameter
Flange attachment size (D):	39mm dia. x 0.75mm (P)
Flange focal distance (E):	177.0mm
Overall length (F):	60.5mm (2.4")
Weight:	380g (13.4 oz.)

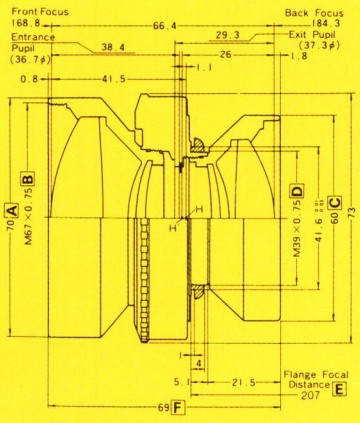

Nikkor-W 210mm f/5.6

Product number:	1318
Focal length:	210mm
Maximum aperture:	f/5.6
Optical construction:	6 elements in 4 groups
Aperture range:	f/5.6-f/64
Covering power (f/5.6):	60°
Covering power (f/22):	70°
Image circle (f/5.6):	243mm diameter
Image circle (f/22):	295mm diameter (6½"x 8½)
Shutter:	Copal no. 1, designed exclusively for Nikon
Shutter speeds:	1-1/400 sec., T, B
Flash sync socket:	X contact
Front mount size (A):	70mm diameter
Attachment size (B):	67mm dia. x 0.75mm (P)
Rear mount size (C):	60mm diameter
Flange attachment size (D):	39mm dia. x 0.75mm (P)
Flange focal distance (E):	207.0mm
Overall length (F):	69mm (2.7")
Weight:	460g (16.2 oz.)

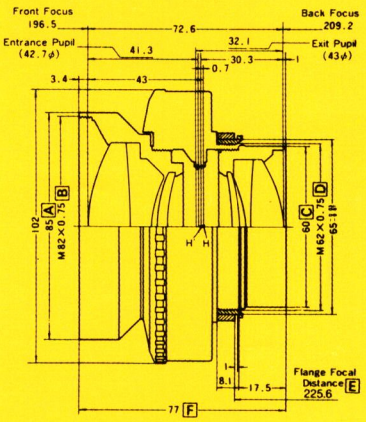

Nikkor-W 240mm f/5.6

Product number:	1319
Focal length:	240mm
Maximum aperture:	f/5.6
Optical construction:	6 elements in 4 groups
Aperture range:	f/5.6-f/64
Covering power (f/5.6):	60°
Covering power (f/22):	70°
Image circle (f/5.6):	278mm diameter
Image circle (f/22):	336mm diameter (8''x10'')
Shutter:	Copal no. 3, designed exclusively for Nikon
Shutter speeds:	1-1/125 sec., T, B
Flash sync socket:	X contact
Front mount size (A):	85mm diameter
Attachment size (B):	82mm dia. x 0.75mm (P)
Rear mount size (C):	60mm diameter
Flange attachment size (D):	62mm dia. x 0.75mm (P)
Flange focal distance (E):	225.6mm
Overall length (F):	77mm (3.0'')
Weight:	820g (28.9 oz.)

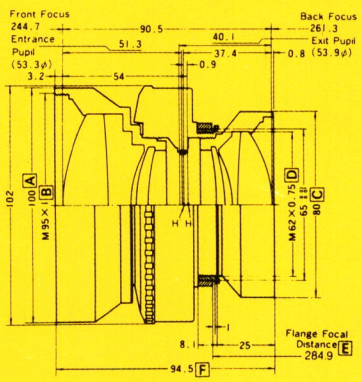

Nikkor-W 300mm f/5.6

Product name:	1320
Focal length:	300mm
Maximum aperture:	f/5.6
Optical construction:	6 elements in 4 groups
Aperture range:	f/5.6-f/64
Covering power (f/5.6):	60°
Covering power (f/22):	70°
Image circle (f/5.6):	346mm diameter
Image circle (f/22):	420mm diameter (10''x12'')
Shutter:	Copal no. 3, designed exclusively for Nikon
Shutter speeds:	1-1/125 sec., T, B
Flash sync socket:	X contact
Front mount size (A):	100mm diameter
Attachment size (B):	95mm dia. x 1mm (P)
Rear mount size (C):	80mm diameter
Flange attachment size (D):	62mm dia. x 0.75mm (P)
Flange focal distance (E):	284.9mm
Overall length (F):	94.5mm (3.7'')
Weight:	1250g (44.1 oz.)

Nikkor-W 360mm f/6.5

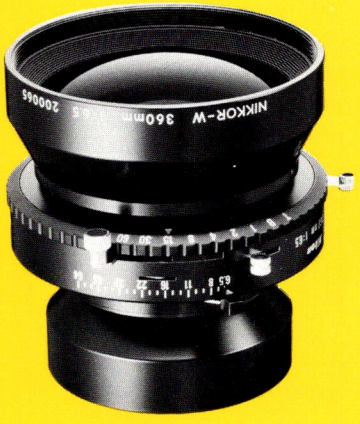

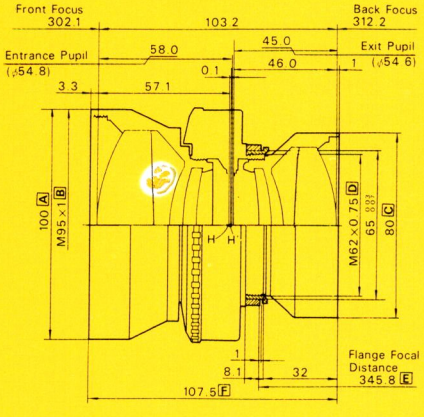

Product number:	1327
Focal length:	360mm
Maximum aperture:	f/6.5
Optical construction:	6 elements in 4 groups
Aperture range:	f/6.5-f/64
Covering power (f/6.5):	60°
Covering power (f/22):	69°
Image circle (f/6.5):	415mm diameter
Image circle (f/22):	494mm diameter (11" x 14")
Shutter:	Copal no. 3, designed exclusively for Nikon
Shutter speeds:	1-1/125 sec., T, B
Flash sync socket:	X contact
Front mount size (A):	100mm diameter
Attachment size (B):	95mm dia. x 1mm (P)
Rear mount size (C):	80mm diameter
Flange attachment size (D):	62mm dia. x 0.75mm (P)
Flange focal distance (E):	345.8mm
Overall length (F):	107.5mm (4.2")
Weight:	1420g (50.1 oz.)

Nikkor-T ED 270mm f/6.3

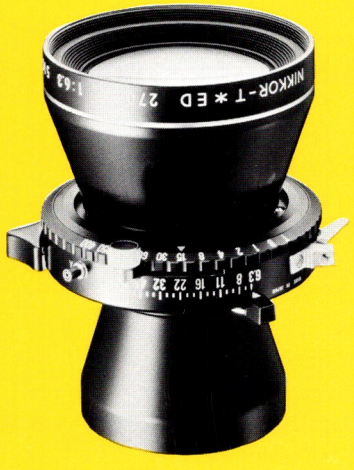

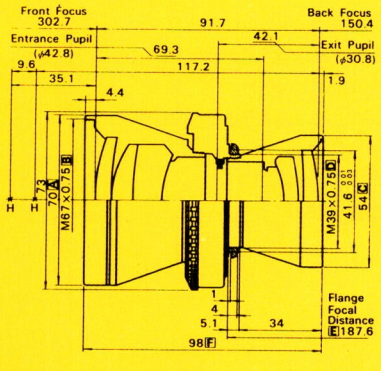

Product number:	1352
Focal length:	270mm
Maximum aperture:	f/6.3
Optical construction:	5 elements in 4 groups
Aperture range:	f/6.3-f/64
Covering power (f/6.3):	24°
Covering power (f/22):	33°
Image circle (f/6.3):	114mm diameter
Image circle (f/22):	160mm diameter (4"x5")
Shutter:	Copal no. 1, designed exclusively for Nikon
Shutter speeds:	1-1/400 sec., T, B
Flash sync socket:	X contact
Front mount size (A):	70mm diameter
Attachment size (B):	67mm dia. x 0.75mm (P)
Rear mount size (C):	42mm diameter
Flange attachment size (D):	39mm dia. x 0.75mm (P)
Flange focal distance (E):	187.6mm
Overall length (F):	98mm (3.9")
Weight:	590g (20.8 oz.)

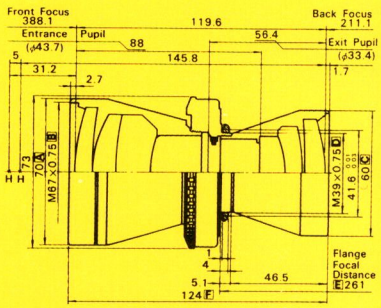

Nikkor-T ED 360mm f/8

Product name:	1353
Focal length:	360mm
Maximum aperture:	f/8
Optical construction:	5 elements in 4 groups
Aperture range:	f/8-f/64
Covering power (f/8):	24°
Covering power (f/22):	33°
Image circle (f/8):	154mm diameter
Image circle (f/22):	210mm diameter (5''x7'')
Shutter:	Copal no. 1, designed exclusively for Nikon
Shutter speeds:	1-1/400 sec., T, B
Flash sync socket:	X contact
Front mount size (A):	70mm diameter
Attachment size (B):	67mm dia. x 0.75mm (P)
Rear mount size (C):	60mm diameter
Flange attachment size (D):	39mm dia. x 0.75mm (P)
Flange focal distance (E):	261.0mm
Overall length (F):	124mm (4.9'')
Weight:	800g (28.2 oz.)

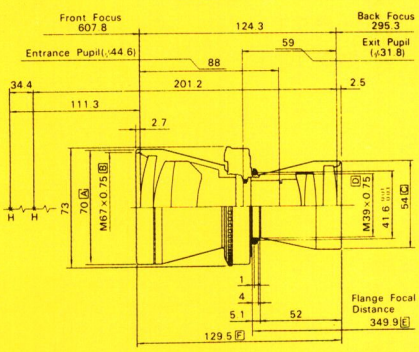

Nikkor-T ED 500mm f/11

Product number:	1354
Focal length:	500mm
Maximum aperture:	f/11
Optical construction:	6 elements in 4 groups
Aperture range:	f/11-f/64
Covering power (f/11):	17°
Covering power (f/22):	24°
Image circle (f/11):	154mm diameter
Image circle (f/22):	210mm diameter (5'' x 7'')
Shutter:	Copal no. 1, designed exclusively for Nikon
Shutter speeds:	1-1/400 sec., T, B
Flash sync socket:	X contact
Front mount size (A):	70mm diameter
Attachment size (B):	67mm dia. x 0.75mm (P)
Rear mount size (C):	54mm diameter
Flange attachment size (D):	39mm dia. x 0.75mm (P)
Flange focal distance (E):	349.9mm
Overall length (F):	129.5mm (5.1'')
Weight:	760g (26.8 oz.)

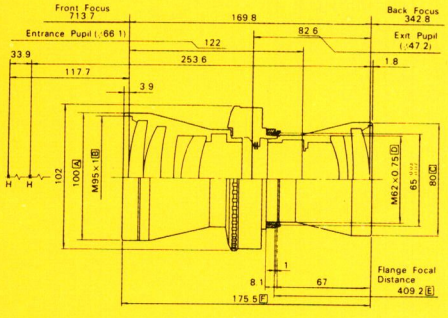

Nikkor-T ED 600mm f/9

Product number:	1355
Focal length:	600mm
Maximum aperture:	f/9
Optical construction:	6 elements in 5 groups
Aperture range:	f/9-f/64
Covering power (f/9):	19°
Covering power (f/22):	29°
Image circle (f/9):	200mm diameter
Image circle (f/22):	310mm diameter (8''x10'')
Shutter:	Copal no. 3, designed exclusively for Nikon
Shutter speeds:	1-1/125 sec., T, B
Flash sync socket:	X contact
Front mount size (A):	100mm diameter
Attachment size (B):	95mm dia. x 1mm (P)
Rear mount size (C):	80mm diameter
Flange attachment size (D):	62mm dia. x 0.75mm (P)
Flange focal distance (E):	409.6mm
Overall length (F):	175.5mm (6.9'')
Weight:	1650g (58.2 oz.)

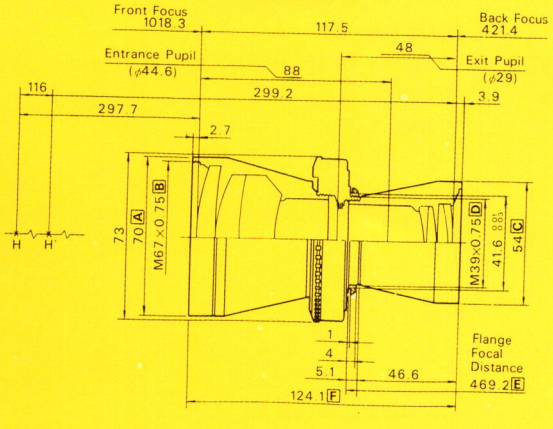

Nikkor-T ED 720mm f/16

Product name:	1357
Focal length:	720mm
Maximum aperture:	f/16
Optical construction:	7 elements in 4 groups
Aperture range:	f/16-f/64
Covering power (f/16):	12°
Covering power (f/22):	17°
Image circle (f/16):	154mm diameter
Image circle (f/22):	210mm diameter (5''x7'')
Shutter:	Copal no. 1, designed exclusively for Nikon
Shutter speeds:	1-1/400 sec., T, B
Flash sync socket:	X contact
Front mount size (A):	70mm diameter
Attachment size (B):	67mm dia. x 0.75mm (P)
Rear mount size (C):	54mm diameter
Flange attachment size (D):	39mm dia. x 0.75mm (P)
Flange focal distance (E):	469.2mm
Overall length (F):	124.1mm (4.9'')
Weight:	780g (27.5 oz.)

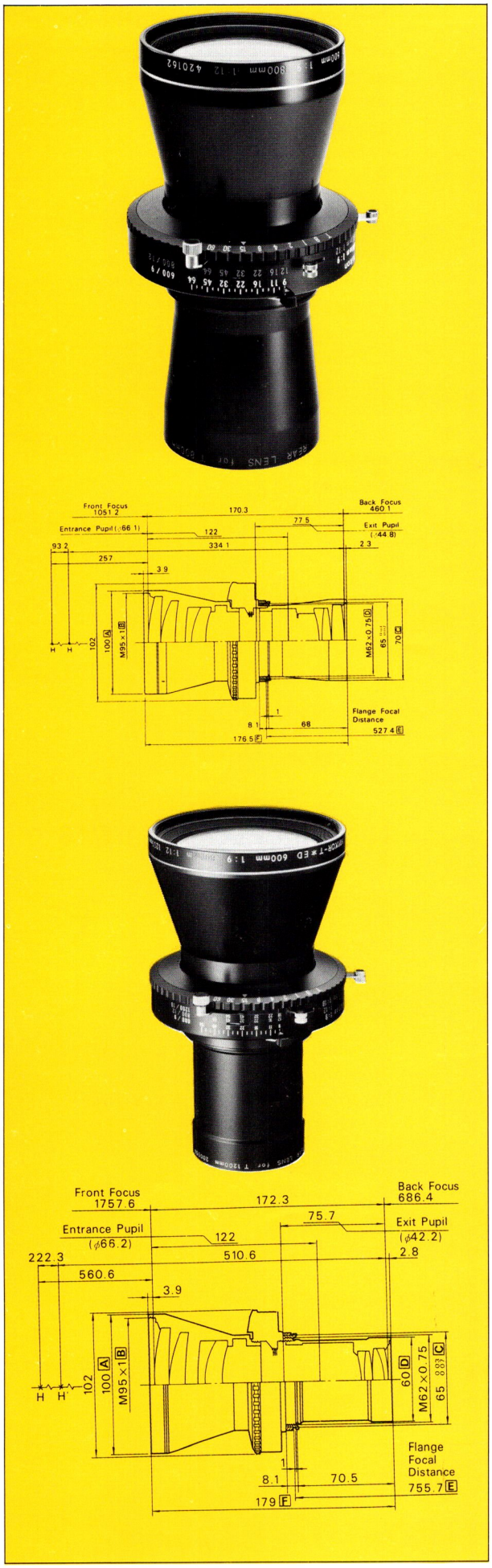

Nikkor-T ED 800mm f/12

Product number:	1356
Focal length:	800mm
Maximum aperture:	f/12
Optical construction:	7 elements in 5 groups
Aperture range:	f/12-f/64
Covering power (f/12):	14°
Covering power (f/22):	22°
Image circle (f/12):	200mm diameter
Image circle (f/22):	310mm diameter (8" x 10")
Shutter:	Copal no. 3, designed exclusively for Nikon
Shutter speeds:	1-1/125 sec., T, B
Flash sync socket:	X contact
Front mount size (A):	100mm diameter
Attachment size (B):	95mm dia. x 1mm (P)
Rear mount size (C):	70mm diameter
Flange attachment size (D):	62mm dia. x 0.75mm (P)
Flange focal distance (E):	527.4mm
Overall length (F):	176.5mm (6.9")
Weight:	1600g (56.4 oz.)

Nikon Advanced Systems Dealer

Nikkor-T ED 1200mm f/18

Product number:	1364
Focal length:	1200mm
Maximum aperture:	f/18
Optical construction:	8 elements in 5 groups
Aperture range:	f/18-f/64
Covering power (f/18):	10°
Covering power (f/22):	15°
Image circle (f/18):	200mm diameter
Image circle (f/22):	310mm diameter (8" x 10")
Shutter:	Copal no. 3, designed exclusively for Nikon
Shutter speeds:	1-1/125 sec., T, B
Flash sync socket:	X contact
Front mount size (A):	100mm diameter
Attachment size (B):	95mm dia. x 1mm (P)
Rear mount size (C):	60mm diameter
Flange attachment size (D):	62mm dia. x 0.75mm (P)
Flange focal distance (E):	755.7mm
Overall length (F):	179mm (7.0")
Weight:	1480g (52.2 oz.)

Nikon Advanced Systems Dealer

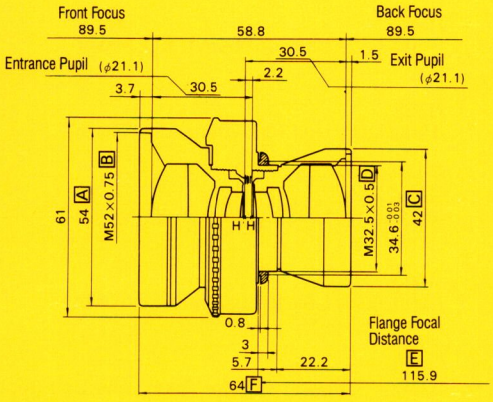

Nikkor-AM ED 120mm f/5.6

Product number:	1325
Focal length:	120mm
Maximum aperture:	f/5.6
Optical construction:	8 elements in 4 groups
Aperture range:	f/5.6-f/45
Covering power (f/5.6):	47°
Covering power (f/22):	55°
Image circle (f/5.6):	210mm diameter, M = 1:1
Image circle (f/22):	250mm diameter (5" x 7"), M = 1:1
Shutter:	Copal no. 0, designed exclusively for Nikon
Shutter speeds:	1-1/500 sec., T, B
Flash sync socket:	X contact
Front mount size (A):	54mm diameter
Attachment size (B):	52mm dia. x 0.75mm (P)
Rear mount size (C):	42mm diameter
Flange attachment size (D):	32.5mm dia. x 0.5mm (P)
Flange focal distance (E):	115.9mm
Overall length (F):	64mm (2.5")
Weight:	295g (10.4 oz.)

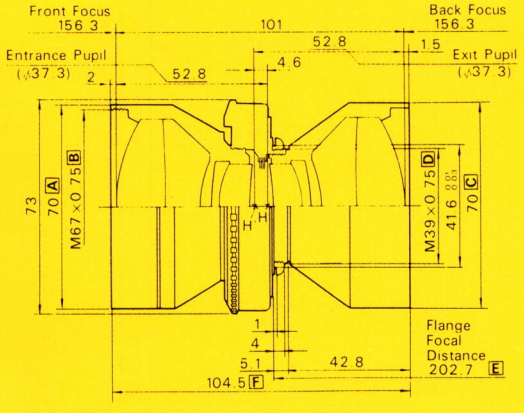

Nikkor-AM ED 210mm f/5.6

Product number:	1326
Focal length:	210mm
Maximum aperture:	F/5.6
Optical construction:	8 elements in 4 groups
Covering power (f/5.6):	41°
Covering power (f/22):	51°
Image circle (f/5.6):	310mm diameter, M = 1:1
Image circle (f/22):	400mm distance (10" x 12"), M ' 1:1
Shutter:	Copal No. 1, designed exclusively for Nikon
Shutter speeds:	1-1/400 sec. T, B
Flash sync socket:	X-contact
Front mount size (A):	70mm diameter
Attachment size (B):	67mm diameter x 0.75 mm(P)
Rear mount size (C):	70mm diameter
Flange attachment size (D):	39mm diameter x 0.75mm(P)
Flange focal distance (E):	202.7mm
Overall length (F):	104.5mm (4.1")
Weight:	850g (30.0 oz.)

Nikon Accessories for Large-Format Lenses

Nikon Advanced Systems Dealer

Rear Lens Units

Product Number 1358
Rear Lens Unit for 360mm ED Nikkor-T

Product Number: 1359
Rear Lens Unit for 500mm ED Nikkor-T

Product Number: 1360
Rear Lens Unit for 600mm ED Nikkor-T

Product Number: 1362
Rear Lens Unit for 720mm ED Nikkor-T

Product Number: 1361
Rear Lens Unit for 800mm ED Nikkor-T

Product Number: 1363
Rear Lens Unit for 1200mm ED Nikkor-T

Product Number: 1338
36mm Screw-on Cap for Rear Lens Unit (repl.)

Product Number: 1339
58mm Screw-on Cap for Rear Lens Unit (repl.)

Lens Caps

Product Number: 1337
31.5mm Slip-on Lens Cap (repl.)

Product Number: 1330
42mm Slip-on Lens Cap (repl.)

Product Number: 1331
54mm Slip-on Lens Cap (repl.)

Product Number: 1332
60mm Slip-on Lens Cap (repl.)

Product Number: 1333
70mm Slip-on Lens Cap (repl.)

Product Number: 1334
80mm Slip-on Lens Cap (repl.)

Product Number: 1335
85mm Slip-on Lens Cap (repl.)

Product Number: 1336
100mm Slip-on Lens Cap (repl.)

Special Application Lenses

Nikkor Lenses for Special Optics Application

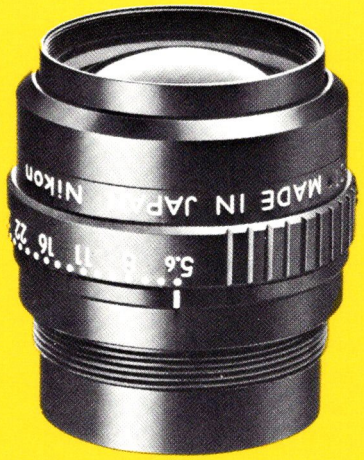

Product Number	*Description*
96972	240mm f/9 APO-Nikkor
96971	305mm f/9 APO-Nikkor
96980	350mm f/9 APO-Nikkor
96987	420mm f/9 APO-Nikkor
96981	480mm f/9 APO-Nikkor
96985	610mm f/9 APO-Nikkor
96986	760mm f/11 APO-Nikkor
96989	890mm f/11 APO-Nikkor
96990	1210mm f/12.5 APO-Nikkor
96968	105mm f/5.6 APO-EL-Nikkor
96969	210mm f/5.6 APO-EL-Nikkor

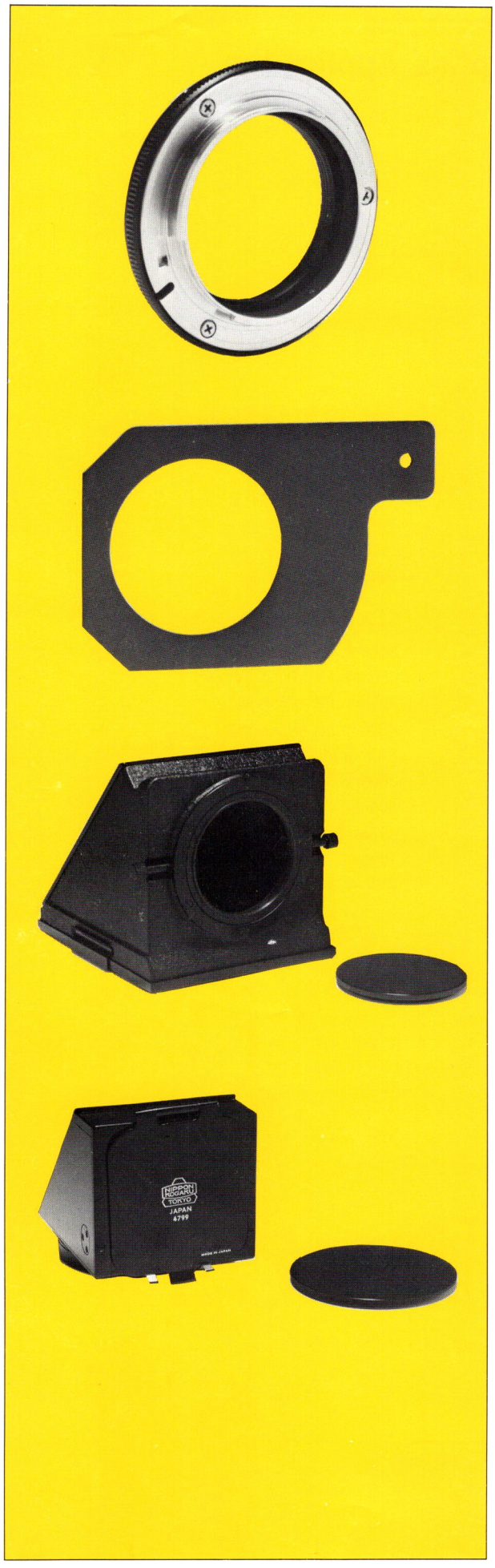

Nikkor Lens Accessories for Special Optics Application

Mounting Rings

Product Number	*Description*
96925	39mm Lens Mounting Flange
2360	F-to-C Lens Mounting Adapter
2628	EL-to-F Lens Mounting Adapter

Filter Holders

Product Number	*Description*
96950	Filter Holder for 180, 240mm APO
96952	Filter Holder for 305, 360mm APO
96954	Filter Holder for 420, 480mm APO
96955	Filter Holder for 610, 760mm APO

Mirrors

Product Number	*Description*
96915	Type S Mirror
96916	Type M Mirror

Prisms

Product number	*Description*
96920	Type S Roof Prism
96921	Type M Roof Prism
96922	Type L Roof Prism
96910	Type S Right-Angle Prism for 180, 240mm
96911	Type S Right-Angle Prism for 305, 360mm
96912	Type L Right-Angle Prism for 420, 480mm

SLR Finder

DP-20 Multi-Meter Finder for Nikon F4 (repl.)

Nikon Advanced Systems Dealer

Product number: 2500

Application: Standard meter with the Nikon F4 camera, providing Nikon's exclusive Matrix metering plus traditional 60/40 center-weighted metering; design incorporates a high-eyepoint optical system featuring approx. 22mm eye relief for comfortable viewing even while wearing eyeglasses or goggles; equipped with dial for viewing system adjustment over the range of from –3 to +1 diopter; 3-position dial provides for selection of each of the three meter functions available (i.e., "Spot," "C/W" and "Matrix"); focusing screen compensation adjustment and eyepiece shutter also provided; top-mount hot shoe accepts all Nikon Speedlights equipped with standard ISO-type mounting foot; hot shoe equipped with supplemental contacts for TTL automatic flash exposure control with Nikon-dedicated Speedlights

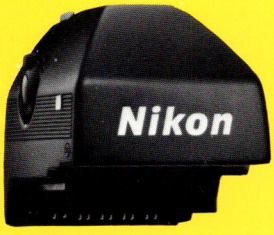

DA-20 AE Action Finder for Nikon F4

Nikon Advanced Systems Dealer

Product number: 2503

Application: Provides extra-long eye relief to permit the photographer to use the camera in a housing, etc.; fitting with circuitry to provide 60/40 center-weighted exposure measurement; selector dial enables switchcover from "Center-weighted" to "Spot" metering as required; usable with all F4-series cameras; fitted with ISO-type flash hot-shoe for TTL automatic flash operation with Nikon-dedicated Speedlights

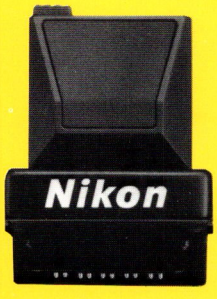

DW-20 Waist-Level Finder for Nikon F4

Nikon Advanced Systems Dealer

Product number: 2501

Application: Equipped with pop-up type viewing hood for use when shooting from a low position, or when the camera is mounted vertically on a copy stand, etc.; fitted with flip-up magnifier for precise focusing and viewing; operates with camera's built-in spot meter.

DW-21 High-Magnification Finder for Nikon F4

Nikon Advanced Systems Dealer

Product number: 2502

Application: Provides high magnification for critical focusing necessary for such special shooting requirements as photomicrography, etc.; usable with all F4-series cameras

Special characteristics: Suitable for very fine focusing; fitted with an adjustable (and lockable) eyepiece having a range of from +3 to –5 diopters; the rubber eyecup enhances viewer comfort, the eyepiece cover prevents entry of stray light that might otherwise affect meter readings; exposure measurement via the camera's built-in spot meter; excellent for parallax focusing with Type M focusing screen

Nikon Advanced Systems Dealer

Viewfinder Prism Cover

(Not Pictured)

Product number: 2327

Application: Provides protection for finders and finder prisms

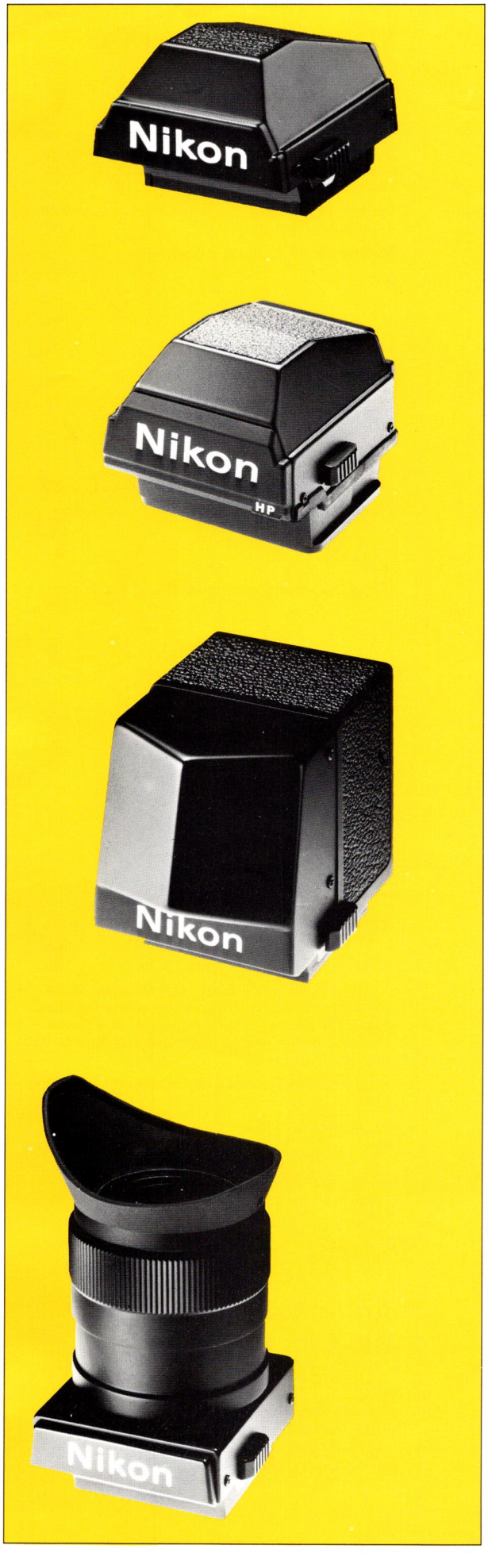

Eyelevel Finder DE-2 for F3HP

Nikon Advanced Systems Dealer

Product number: 2382

Application: Provides erect image, with eye-level viewing comfort; usable with all Nikon F3-Series cameras

Dimensions: 39mm(H) x 59mm(W) x 66mm(D)

Weight: 120g

High-Eyepoint Finder DE-3 for F3HP

Nikon Advanced Systems Dealer

Product number: 2386

Application: Provide erect image with eye-level viewing comfort; usable with all Nikon F3-series cameras; supplied with Nikon F3HP camera

Special characteristics: The entire frame is visible with the eye up to 2.5cm (1 inch) away from the eyepiece

Dimensions: 52.5mm(H) x 43.5mm(W) x 69mm(D)

Weight: 165g

Action Finder DA-2 for F3HP

Nikon Advanced Systems Dealer

Product number: 2385

Application: Provides extra-long eye relief to permit the photographer to use the camera in a housing, etc.; usable with all Nikon F3-series cameras

Special characteristics: The entire frame is visible with the eye up to 8cm (3.3 inches) away from the eyepiece

Dimensions: 59.5mm(H) x 52.9mm(W) x 73.2mm(D)

Weight: 300g

6x High-Magnification Finder for F3HP

Nikon Advanced Systems Dealer

Product number: 2384

Application: Provides high magnification for critical focusing of photomicrography, etc.; usable with all Nikon F3-series cameras

Special characteristics: This finder is suitable for obtaining very fine focusing; the DW-4 is fitted with a -5 to +3 diopter adjustment and a rubber eyecup equipped with eyepiece cover for accurate auto-exposure operation

Dimensions: 54.2mm(H) x 26.5mm(W) x 59.6mm(D)

Weight: 220g

Waist-Level Finder DW-3 for F3HP

Nikon Advanced Systems Dealer

Product number:	2383
Application:	Provides compact finder with pop-up design for waist-level or low-angle shooting; viewed image is laterally reversed; usable on all Nikon F3-series cameras
Special characteristics:	Built-in, flip-up magnifier provides 5x magnification for accurate focusing
Dimensions:	73mm(H) x 54.2mm(W) x 59mm(D)
Weight:	90g

Viewfinder Bottom Cover for F3

Nikon Advanced Systems Dealer

Product number:	2389
Application:	Provides protection for finders and finder prisms

Autofocus Finder DX-1 for F3HP

Nikon Advanced Systems Dealer

Product number:	2381
Application:	Provided with Nikon F3AF; can be used as a focusing aid also in conjunction with a standard Nikon F3 and with about 40 Nikkor and Nikon Series E lenses with a maximum aperture of f/3.5 and brighter
Focusing screen:	Fixed, built-in Fresnel/matte screen and focusing field
Viewfinder field:	Approximately 92%
Power source:	Two 1.5v, type-AAA (penlight) alkaline batteries
Dimensions:	55.5mm(W) x 62.5mm(H) x 90mm(D)
Weight:	365g (with batteries)

Anti-cold Battery Pack DB-4 for F3

Nikon Advanced Systems Dealer

Product Number:	2032
Application:	For use with Autofocus Finder DX-1 on Nikon F3AF to provide protection against the ill effects of cold temperature on the batteries powering the autofocus system

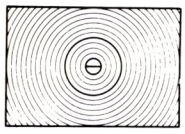

Product number: 2552

Description: Focusing Screen A
Focusing screen with matte Fresnel field; 12mm center reference circle and split-image rangefinder

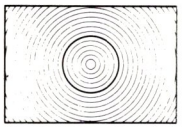

Product number: 2553

Description: Focusing Screen B/U
Focusing screen with matte Fresnel field and 12mm center reference circle; for macro photography and use with telephoto lenses
U screen designed for lenses of 100mm or longer

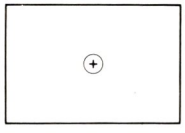

Product number: 2554

Description: Focusing Screen C
Fine matte focusing screen with clear center circle, crosshairs in 4mm center circle; for high magnifications

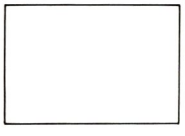

Product number: 2555

Description: Focusing Screen D
Fine matte focusing screen, particularly suitable for long telephoto lenses and for close-up photography

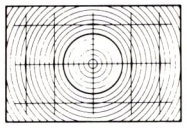

Product number: 2556

Description: Focusing Screen E
Focusing screen with matte Fresnel field, 12mm center reference circle with vertical and horizontal grid lines; excellent for architectural photography in conjunction with the PC-Nikkor lens

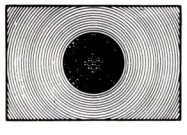

Product number: 2557 (G1)
2558 (G2)
2559 (G3)
2560 (G4)

Description: Focusing Screens G1, 2, 3 and 4

Clear Fresnel focusing screens with 12mm microprism collar; excellent for focusing under poor lighting conditions; available in 4 models for various lens maximum apertures

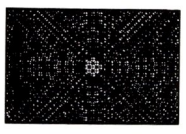

Product number: 2561 (H1)
2563 (H3)
2564 (H4)

Description: Focusing Screens H1, 2, 3 and 4

Clear Fresnel focusing screen with microprisms over the entire field; recommended for photography in poor lighting conditions; available in 4 models for various lens maximum apertures

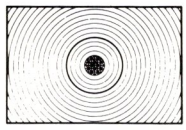

Product number: 2565

Description: Focusing Screen J
Focusing screen with matte Fresnel field, 4mm microprisms in 12mm center reference circle; excellent for general photography

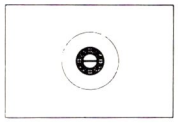

Product number: 2551

Description: Focusing Screen K
Combination of types A and J; excellent for general photography; provided as standard with Nikon F3HP

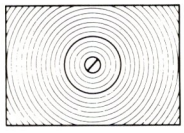

Product number: 2566

Description: Focusing Screen L
Corresponds to type A, but with diagonal (45°) split-image rangefinder; facilitates focusing on horizontal lines

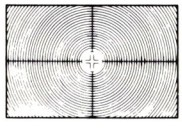

Product number: 2567

Description: Focusing Screen M
Clear glass with double crosshairs and millimetre scales; excellent for photomicrography with 6x High Magnification Finder DW-4

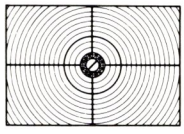

Product number: 2568

Description: Focusing Screen P
Focusing screen with matte Fresnel field, diagonal split-image, microprisms and 12mm center reference circle; also provided with vertical and horizontal central lines

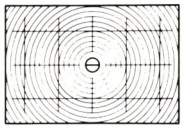

Product number: 2569

Description: Focusing Screen R
Focusing screen with matte Fresnel field and split-image rangefinder which does not darken when slow lenses are used; with vertical and horizontal grid lines; excellent for architectural photography

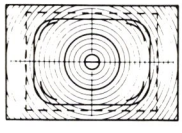

Product number: 2570

Description: Focusing Screen T
Focusing screen with matte Fresnel field and TV screen frame lines

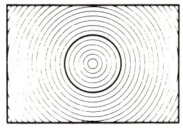

Product number: 2572

Description: Focusing Screen S
Similar to Type K except provides area on the left side of frame for date imprinting when used with Nikon 250 exp. Data Back

Combination Table for Lenses & Focusing Screens

◎ ***Excellent:*** Fully compatible

◉ ***Possible:*** The image is bright over the entire focusing screen but the microprism center or center of the crosshairs is dark.

○ ***Possible:*** Slight vignetting is visible on the focusing screen; however, this has no effect on the image quality.

△ ***Possible:*** For lenses with an aperture of 2.8 and larger; this focusing screen is inaccurate since the focus in the center of the screen does not correspond to that on the film; focusing must be performed outside the 12mm center reference circle

▭ ***Full-aperture metering:*** Can only be used with the aperture stopped-down

Lens Type	Focal Length	A/L	B/E	C	D	G1	G2	G3	G4	H1	H2	H3	H4	J	K/P/S	M	R	T	U
Fisheye	6mm f/2.8	◎	◎	◉	◎	◎	○			◎	◎			◎	◎		△	◎	
	8mm f/2.8	◎	◎	◉	◎	◎	◎			◎	◎	◎		◎	◎		△	◎	
	16mm f/2.8	◎	◎			◎				◎				◎	◎		△	◎	
Wide Angle	13mm f/5.6	◉	◎				○				◎			◎	◉		◎	◉	
	15mm f/3.5	◎	◎				○				◎			◎	◎		◎	◎	
	18mm f/3.5	◎	◎								○			◎	◎		◎	◎	
	20mm f/2.8	◎	◎							◎				◎	◎		◎	◎	
	24mm f/2	◎	◎				◎			◎	○			◎	◎		△	◎	
	24mm f/2.8	◎	◎				◎			○	◎			◎	◎		△	◎	
	28mm f/2	◎	◎			◎	◎			○	◎			◎	◎		△	◎	
	28mm f/2.8	◎	◎			◎				◎				◎	◎		△	◎	
	35mm f/1.4	◎	◎				◎			○	◎			◎	◎		△	◎	
	35mm f/2	◎	◎			○	◎			○	◎			◎	◎		△	◎	
Normal	50mm f/1.2	◎	◎				◎				◎			○	○		△	◎	◎
	50mm f/1.4	◎	◎				◎				◎			◎	◎		△	◎	◎
Telephoto	85mm f/1.4	◎	◎			○	◎			○	◎				◎		△	◎	◎
	85mm f/2	◎	◎				◎			○	◎				◎		△	◎	○
	105mm f/1.8	◎	◎				◎			○	◎				◎		△	◎	◎
	105mm f/2.5	◎	◎				◎			○	◎				◎		△	◎	◎
	135mm f/2	◎	◎	○	○		◎				◎				◎		△	◎	◎
	135mm f/2.8	◎	◎	○	○		◎				◎				◎		△	◎	◎
	200mm f/2N ED-IF	◎	◎	◎	◎		◎								◎		△	◎	◎
	200mm f/4	◎	◎	○	○		◎								◎		◎	◎	◎
	300mm f/4.5 ED-IF	◎	◎	○	○			◎			○	◎	○	◎	◎		◎	◎	◎
	300mm f/4.5	◎	◎	○	○			◎			○	◎	○	◎	◎		◎	◎	◎
	400mm f/2.8 ED-IF	◎		◎	◎			◎	○			◎	◎	◎	◎		△	◎	◎
	400mm f/3.5 ED-IF	◎	◎	◎	◎			◎	○			◎	◎	◎	◎		◎	◎	
	400mm f/5.6 ED-IF	◉	◎	○	○			◎	○			◎	○	◎	◉		◎	◉	
	500mm f/4P ED-IF	◎	◎	○	○							○	○	◎	◎		○	◎	◎
	600mm f/4 ED-IF	◎	◎	○	○			○	○			○	○	◎	◎			◎	
	600mm f/5.6 ED-IF	◉	◎	◎	◎				◎				◎	◎	◉			◉	
	800mm f/5.6 ED-IF	◉	◎	◎	◎				◎				◎	◎			◎	◉	◎
Zoom	35–105mm f/3.5–4.5	◎	◎											◎	◎		◎	◎	○
	35–135mm f/3.5–4.5	◎	◎											◎	◎		◎	◎	○
	35–200mm f/3.5–4.5	◎	◎		◎			○				○		◎			◎	◎	○
	50–300mm f/4.5 ED	◎	◎				○	○				○						◎	
	80–200mm f/4	◎	◎					○				◎						◎	
	100–300mm f/5.6	◉	◎															◉	
	180–600mm f/8 ED	◉	◎		◎			○				○						◉	
Autofocus	20mm f/2.8 AF	◎	◎							◎				◎	◎		◎	◎	
	24mm f/2.8 AF	◎	◎				◎			○	◎			◎	◎		△	◎	
	28mm f/2.8 AF	◎	◎			◎				◎				◎	◎		△	◎	
	35mm f/2 AF	◎	◎			○	◎			○	◎			◎	◎		△	◎	
	50mm f/1.4 AF	◎	◎			◎	◎			◎	◎			◎	◎		△	◎	
	50mm f/1.8 AF	◎	◎				◎				◎			◎	◎		△	◎	
	55mm f/2.8 AF-MICRO	◎	◎				◎			○	◎			◎	◎		△	◎	
	60mm f/2.8 AF-MICRO																		
	85mm f/1.8 AF	◎	◎				◎				◎	○		◎	◎		△	◎	
	180mm f/2.8N AF ED-IF	◎	◎	○	○		○	◎			◎			◎	◎		△	◎	
	300mm f/2.8N AF ED-IF	◎	◎	○	○			○	○		○	◎	○	◎	◎		◎	◎	
	300mm f/4 AF ED-IF	◎	◎	○	○			◎			○	◎	○	◎	◎		◎	◎	
	24–50mm f/3.3–4.5 AF	◎	◎				○				○			◉	◉		◉	◎	
	28–85mm f/3.5–4.5 AF	◎	◎											◎	◎		◎	◎	
	35–70mm f/2.8 AF	◎	◎				○				○			◎	◎		◎	◎	
	35–70mm f/3.3–4.5 AF	◎	◎											◎	◎		◎	◎	
	35–105mm f/3.5–4.5 AF	◎	◎											◎	◎			◎	
	35–135mm f/3.5–4.5N AF	◎	◎											◎	◎	◎	◎	◎	
	70–210mm f/4–5.6 AF	◎	◎								○			◉	◉		◉	◎	
	75–300mm f/4.5–5.6 AF	◎	◎					○						◉	◉		◉	◎	
	80–200mm f/2.8 AF ED	◎	◎					○			○			◎	◎		△	◎	
PC	28mm f/3.5	◉	◎											◎	◉		◎	◉	
	35mm f/2.8	◉	◎											◎	◉		◎	◉	
Noct	58mm f/1.2 NOCT	◎	◎				◎				◎			◎			△	◎	◎
Micro	55mm f/2.8	◎	◎			○	◎			○	◎			◎	◎		△	◎	
	105mm f/2.8	◎	◎				◎			○	◎			◎	◎		◎	◎	◎
	200mm f/4 IF	◎	◎	○	○			○				○	○	◎	◎		◎	◎	◎
Medical	120mm f/4 IF	◎	◎	○	○			○			◎	○		◎	◎		◎	◎	◎
UV	105mm f/4.5 UV	◎	◎		◎			○	○			○	○	◎	◎		◎	◎	◎
Reflex	500mm f/8	◉	◎	○	○									◉	◉		◉	◉	◎
	1000mm f/11	◉	◎	○	○									◉	◉		◉	◉	◎
	2000mm f/11	◉	◎	◎	◎			○	◎				◎	◉	◉		◉	◉	◎

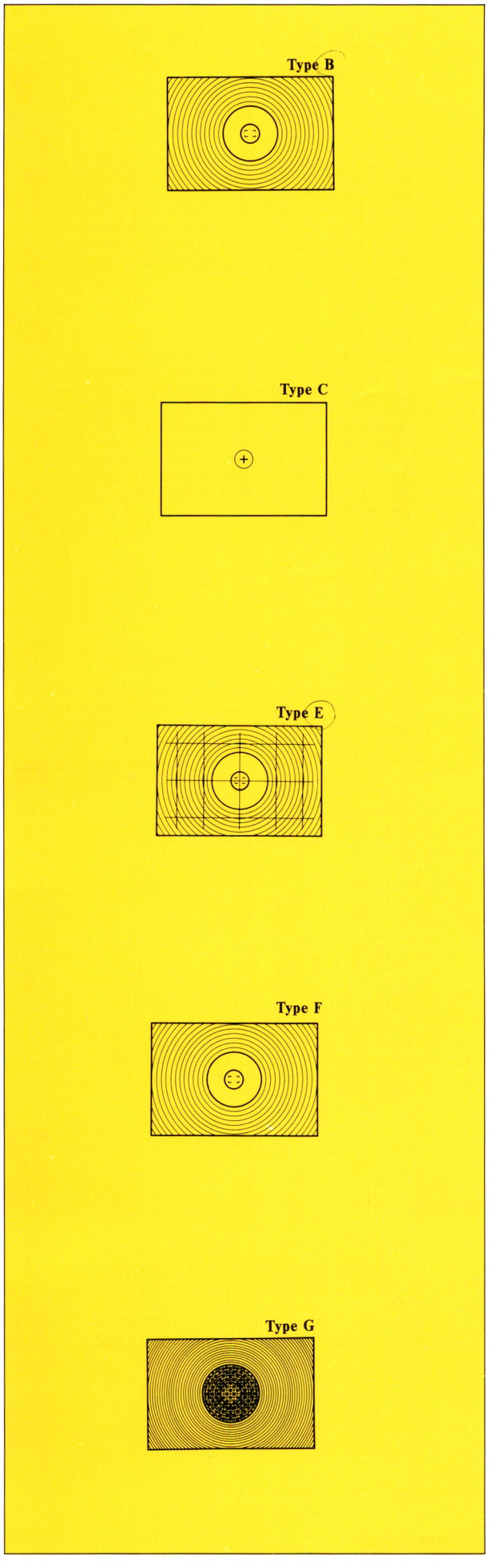

Focusing Screens for Nikon F4S

Product number: 2510

Description: Type B BriteView Focusing Screen (repl.): Focusing screen with advanced BriteView matte/Fresnel field; equipped with central reference marks denoting AF field (brackets), Spot meter area (5mm circle) and Center-weighted meter area (12mm circle); texture of matte field suited for general photogrpahy

Product number: 2511

Description: Type C BriteView Focusing Screen: Focusing screen with advanced BriteView matte field; equipped with central cross-hair and 5mm clear spot for parallax focusing of aerial image with DW-21 High-Magnification Finder; outer diameter of clear spot denotes area of Spot metering with camera meter

Product number: 2512

Description: Type E BriteView Focusing Screen: Focusing screen with advanced BriteView matte/Fresnel field; equipped with central reference marks denoting AF field (brackets), Spot meter area (5mm circle) and Center-weighted meter area (12mm circle); also provided with horizontal/vertical grid for reference alignment when shooting; texture of matte field suited for general photography; grid ideal for architectural work, as well as when shooting with camera on copy stand

Product number: 2513

Description: Type F BriteView Focusing Screen: Focusing screen with advanced BriteView matte/Fresnel field; equipped with central reference marks denoting AF field (brackets), Spot meter area (5mm circle) and Center-weighted meter area (12mm circle); texture of matte field also suited for use with Reflex lenses

Product numbers: 2514 (Type G1) 2515 (Type G2) 2516 (Type G3) 2517 (Type G4)

Description: Type G1/G2/G3/G4 Focusing Screens: Focusing screens with overall clear/Fresnel field and central 12mm-diameter microprism focusing area; equipped with Spot meter (5mm) and Center-weighted meter (12mm) reference circles; four models for use with lenses of various focal lengths; Type G screens provide bright viewing but do not allow visualization of subject depth-of-field

Focusing Screens for Nikon F4S

Type J

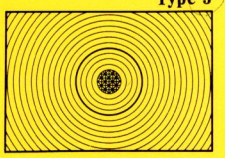

Product number: 2518

Description: Type J BriteView Focusing Screen: Focusing screen with advanced BriteView matte/Fresnel field and clear 5mm-diameter microprism focusing area; equipped with Center-weighted meter (12mm) reference circle; outer diameter of microprism circle denotes area of Spot metering with camera meter; overall performance good for general photography

Type K

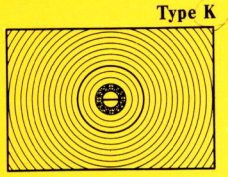

Product number: 2519

Description: Type K BriteView Focusing Screen: Focusing screen with advanced BriteView matte/Fresnel field and clear split-image rangefinder with surrounding clear microprism collar; 5mm diameter of central rangefinder microprism area denotes Spot meter field; also fitted with 12mm Center-weighted meter reference circle; suitable for general photography; provides for rapid and accurate manual focusing with subjects having both straight lines and ill-defined contours

Type M

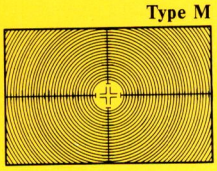

Product number: 2520

Description: Type M Focusing Screen: Focusing screen with fine-ground Fresnel field with 5mm-diameter clear spot and focusing reticle for parallax focusing of aerial image; millimeter reference scales facilitate calculation of reproduction ratio and/or magnification factors; brilliant image in dim light; suited for photomicrography, astrophotography and other high-magnification applications

Type P

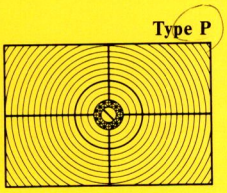

Product number: 2521

Description: Type F BriteView Focusing Screen: Focusing screen with advanced BriteView matte/Fresnel field and clear split-image rangefinder with surrounding clear microprism collar; identical to Type K screen except that rangefinder is positioned at 45° angle and composition reference lines are provided on vertical and horizontal axes

Type U

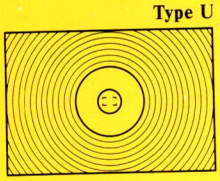

Product numbers: 2522

Description: Type U BriteView Focusing Screens: Focusing screens with advanced BriteView matte/Fresnel field; identical to Type B screen except that texture of matte field is specified for bright operation with lenses of 200mm focal length and longer

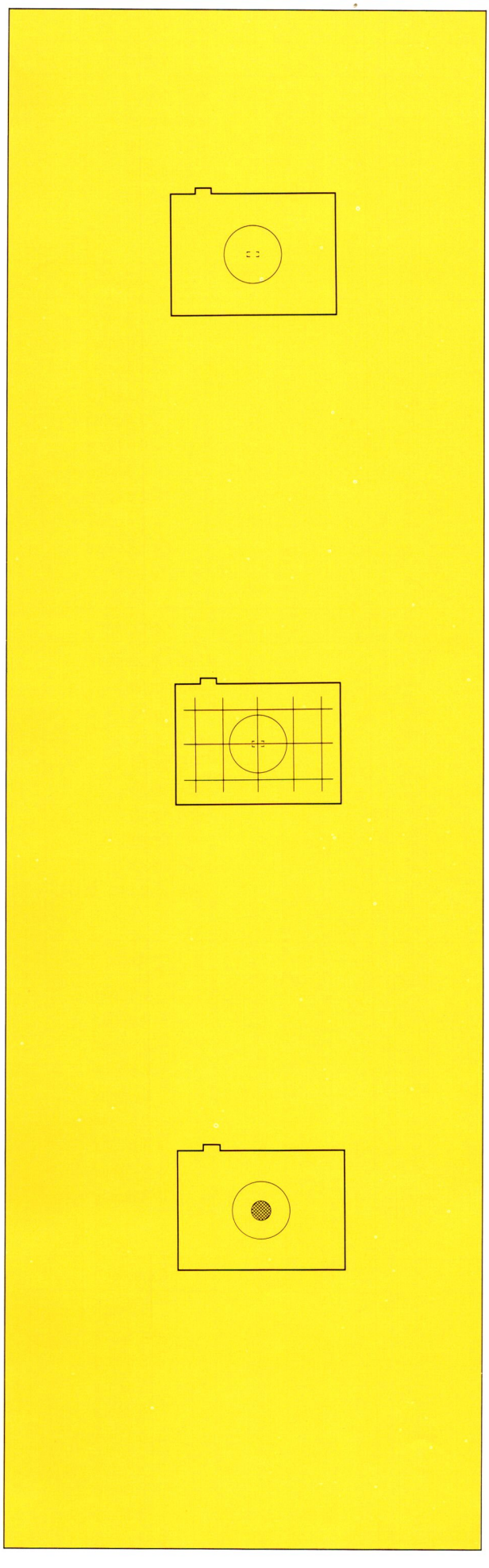

Focusing Screens for Nikon N8008

Product number: 2426

Description: Type B BriteView Focusing Screen (repl.): Focusing screen with Nikon BriteView matte/Fresnel field, 12mm central reference circle, and focusing brackets; for general photography; provided as standard with Nikkon N8008 camera

Product number: 2427

Description: Type C BriteView Focusing Screen: Focusing screen with Nikon BriteView matte/Fresnel field, 12mm central reference circle, vertical and horizontal grid lines, and focusing brackets; excellent for architectural photography, copy work or as an aid for composing in general photography

Product number: 2428

Description: Type J BriteView Focusing Screen: Focusing screen with Nikon BriteView matte/Fresnel field, 12mm central reference circle, 4mm central microprism area, and focusing brackets; excellent for general photography using manual focus mode, or for special applicaitons such as photomicrography and repro-copy work

Focusing Screens for Nikon FM2 Cameras

Product number: 2420

Description: Focusing Screen K2
Focusing screen with matte Fresnel field with split-image rangefinder and microprism collar; 12mm center reference circle; for general photography; provided as standard with camera

Product number: 2421

Description: Focusing Screen B2
Focusing screen with matte Fresnel field with 12mm center reference circle; excellent for macro photography and use with telephoto lenses

Product number: 2422

Description: Focusing Screen E2
Focusing screen with matte Fresnel field, 12mm center reference circle, with vertical and horizontal grid lines; excellent for architectural photography in conjunction with the PC-Nikkor lens

Note: The focusing screens for FM2 (focusing screens K2, B2/E2) are brighter than those for earlier FM2 (flash synchronization X200); for this reason, a correction for proper exposure metering should be made in the following cases: If the focusing screens for FM2 (flash synchronization X200) the exposure must be corrected by -1/3 aperture.

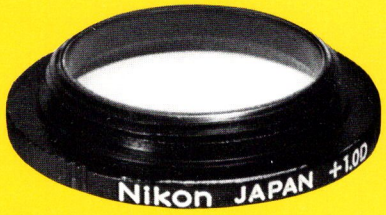

Nikon F4S

Product number:	Correction
2951	+1.0 diopter
2952	+2.0 diopter
2953	—2.0 diopter
2954	—3.0 diopter
2928	Replacement Eyepiece

Nikon F3, F3/T

Product number:	Correction
2918	— 5 diopter
2917	— 4 diopter
2916	— 3 diopter
2915	— 2 diopter
2914	0 diopter
2922	+ 0.5 diopter
2919	+ 1 diopter
2920	+ 2 diopter
2921	+ 3 diopter
2923	Replacement Eyepiece

Nikon N8008

Product number:	Correction
2960	Neutral (0 diopter)
2961	+0.5 diopter
2962	+1.0 diopter
2963	+2.0 diopter
2964	+3.0 diopter
2965	—2.0 diopter
2966	—3.0 diopter
2967	—4.0 diopter
2968	—5.0 diopter
2927	Finder Eyepiece (repl.)

Nikon N2000

Product number:	Correction
2948	— 5 diopter
2947	— 4 diopter
2946	— 3 diopter
2945	— 2 diopter
2940	0 diopter
2941	+ 0.5 diopter
2942	+ 1 diopter
2943	+ 2 diopter
2944	+ 3 diopter

Nikon FM2

Product number:	Correction
2938	— 5 diopter
2937	— 4 diopter
2936	— 3 diopter
2935	— 2 diopter
2930	0 diopter
2931	+ 0.5 diopter
2932	+ 1 diopter
2933	+ 2 diopter
2934	+ 3 diopter
2925	Replacement Eyepiece

DK-6 Rubber Eyecup for Nikon N8008

Product number: 2939

Application: Shields against entry of stray light into viewfinder

DK-7 Eyepiece Mounting Adapter for Nikon N8008

(Not Pictured)

Product number: 2394

Application: For attaching all standard-sized eyepiece accessories (e.g., Eyepiece Magnifier DG-2) to the larger sized thread mounts of the high-eyepoint finder of the Nikon N8008 camera

DK-8 Eyepiece Cap for Nikon N8008 (repl.)

Product number: 2395

Application: Prevent stray light from entering the camera's finder; excellent for unmanned/remote shooting; supplied with camera

Rubber Eyecup for Nikon N2000

(Not Pictured)

Product number: 2939

Application: Shields against entry of stray light into viewfinder

DK-4

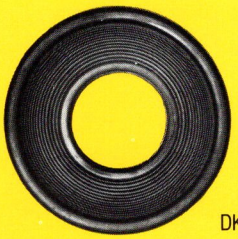

DK-2

Adaptor

DK-1

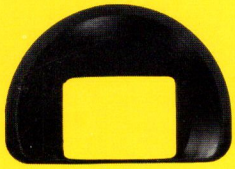

Eyecup

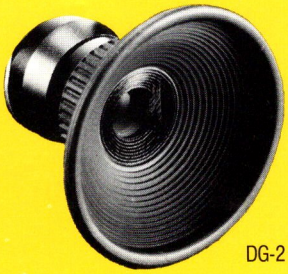

DG-2

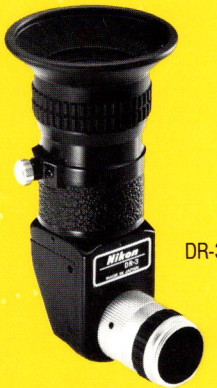

DR-3

Rubber Eyecup DK-4 for Nikon F3, F3/T

Product number: 2379

Rubber Eyecup DK-2 for Nikon F3HP, F3IT, F4S

Product number: 2406

Eyepiece Adapter for Nikon N2000

Product number: 2370

Application: For attaching all eyepiece accessories (e.g., Eyepiece Magnifier DG-2) to Nikon N2000

Eyepiece Adapter DK-1 for Nikon F3HP, F3/T

Product number: 2388

Application: For attaching all standard-sized eyepiece accessories (e.g., Eyepiece Magnifier DG-2) to the larger sized thread mounts of the finder eyepieces of the Nikon F3HP and F3/T cameras

Rubber Eyecup DK-3 for Nikon FM2

Product number: 2362

Eyepiece Magnifier DG-2

Product number: 2355

Description: 2x magnification of the central portion of the finder image; diopter adjustment of from -5 to +1 provided; rubber eyecup built-in

Special characteristics: The magnifier is provided with a hinge so that it can be flipped upwards to expose the entire finder image to allow accurate composition of the picture. Eyepiece Adapter DK-1 for mounting to Nikon F3HP and F3/T cameras; requires mounting adapter for Nikon N2000

Right-angle Viewing Attachment DR-3

Product number: 2326

Description: Provides 100% of the camera viewfinder image, viewed at 90° to eyepiece to facilitate low-level viewing, or operation of camera via copy stand; equipped with diopter adjustments of from -5 to +3; fitted with rubber eyecup

Special characteristics: Fitted with roof prism to maintain image erect and lateral correct; requires Eyepiece Adapter DK-1 for mounting to Nikon F3HP and F3/T cameras; requires mounting adapter for Nikon N2000 and N2020

Weight: 100g

Data Back Motor Drives

Multi-Control Data Back Compatibility Chart

Nikon Advanced Systems Dealer

DATA BACK	CAMERA BODY
MF-14	F3
MF-16	FM2, FE2, FA
MF-17	F3
MF-18	F3
MF-19	N2000, N2020
MF-20	N8008(s)
MF-21	N8008(s)
MF-22	F4S
MF-23	F4S
MF-24	F4S

Motor Drives

MF-22 Data Back for Nikon F4S

Nikon Advanced Systems Dealer

Product number:	4622
Usable camera:	Nikon F4 camera
Application:	Provides for conventional data imprinting on film; data imprinted within the picture frame area; equipped with SELECT button to turn on/off; either time or date imprinting is possible
Usable film speed:	ISO 32-3200
Power source:	One CR2050 battery (supplied)
Dimensions:	160 x 56 x 22 (6.3 x 2.2 x 0.9 in.)
Weight:	Approx. 100 g (3.5 oz.), without battery

MF-23 Multi-Control Back for Nikon F4S

Nikon Advanced Systems Dealer

Product number:	4623
Usable camera:	Nikon F4 camera
Application:	Provides for data imprinting on film and other special control functions in combination with the Nikon F4 camera
Data imprint:	Imprinting of data, time, sequence #, frame number, shutter/aperture information or fixed number possible via selection; data imprinted within the picture frame and/or between frames via selector
Other functions:	Interval/timer, automatic exposure bracketing, long-time exposure control and "Freeze" focus operation
Bracketing steps:	Up to 19 consecutive exposures (min. three frames); 1/3 EV to 2 EV steps via selector
Long exposure control:	Setting provided for selection of exposure times up to 99 hr., 59 min., 59 sec.
Usable film speed:	ISO 25-3200
Power source:	Two CR2050 batteries (supplied)

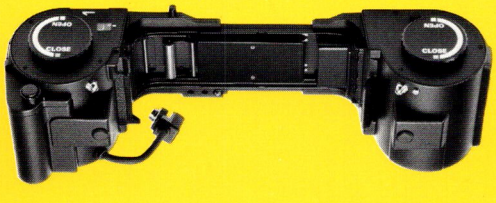

250 Exposure Magazine Back MF-24

Nikon Advanced Systems Dealer

Product number:	4624
Compatible camera:	All Nikon F4S/F4 Series camera bodies without modification
Film cassette:	Film cassette MZ-1 (2 each)
Shooting mode:	Single frame(s) or continuous (CH, CL)
Shooting speed:	Continuous (CH), approx. 5 frames per second: Continuous (CL), approx. 2.5 frames per second
Automatic film stop:	Film advance stops automatically when film reaches the end of the spool. Camera senses the film tension and stops automatically
Battery check:	If both LED's light up, full battery power is available; if only on LED lights up drop in power is indicated; no LED lights up indicates batteries should be replaced immediately
Power supply:	6 AA-type batteries or 6 NiCd batteries via MB-21 high power battery pack; AC power via AC/DC converter MA-4 with MB-22
Remote control:	suitable for operation with remote control cords MC-12 or MC-12A, with wireless remote control MW-2 and other remote control sets
Dimensions:	329.5mm (W) x 98.5mm (H) x 87mm (D)
Weight:	about 1.3 kg (Body Only)

Data Back MF-18 for F3 Series

Nikon Advanced Systems Dealer

Product number:	4568
Application:	Provides for data imprinting between frames for all Nikon F3-Series cameras; enables auto film stop operation with optional Motor Drive MD-4
Possible data:	Three options only one of which is selectable at time: Year/month/day/hours/minutes/seconds or reference numbers to 2000
Data imprinting:	Via six red LEDs
Data display:	Via LCD at rear of unit
Power source:	Two 1.5v silver-oxide button-cell type batteries
Dimensions:	148.5mm(W) x 68.5mm(H) x 30.2mm(D)
Weight:	100g (without batteries)

MF-20 Data Back for Nikon N8008

Nikon Advanced Systems Dealer

Product number:	4620
Application:	Provides for conventional data imprinting on film; data imprinted within the picture frame area; equipped with SELECT button to turn on/off; provides for either time or date imprinting
Usable film speed:	ISO 32-3200
Power source:	One CR2025 battery (supplied)
Dimensions:	5.5″ x 2.4″ x 1.0″ (WxHxD)
Weight:	2.5 oz. (without battery)

MF-21 Multi-Control Back for Nikon N8008

Nikon Advanced Systems Dealer

Product number:	4621
Application:	Provides for data imprinting on film and other special control functions in combination with the Nikon N8008 camera
Data imprint:	Imprinting of data, time, sequence #, frame number, shutter/aperture information or fixed number possible via selection; data imprinted within the picture frame
Other functions:	Interval/timer, automatic exposure bracketing, long-time exposure control and "Freeze" focus operation
Bracketing steps:	Up to 19 consecutive exposures (min. three frames); 1/3 EV to 2 EV steps via selector
Long exposure control:	Setting provided for selection of exposure times up to 99 hr., 59 min., 59 sec.
Usable film speed:	ISO 25-3200
Power source:	Two CR2025 batteries (supplied)
Dimensions:	5.5″ x 2.4″ x 1.1″ (WxHxD)
Weight:	3.2 oz. (without batteries)

Data Back MF-14

Nikon Advanced Systems Dealer

Product number:	4411
Description:	Data Back MF-14
Possible data:	Three options only one of which is selectable at time: Year/month/day/hour/minute or reference numbers to 2000
Data imprinting:	Via six red LEDs
Data display:	Via LCD at rear of unit
Audible warning:	Provided; sounds for 20 sec. at the time set
Power source:	Two 1.5v silver-oxide button-cell type batteries
Dimensions:	148.5mm(W) x 53.5mm(H) x 26mm(D)
Weight:	85g (without batteries)
Optional accessories:	Case Base Portion CF-23D

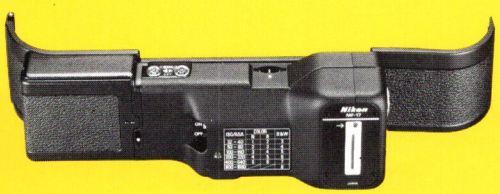

250-Exposure Data Back Set MF-17

Nikon Advanced Systems Dealer

Product number:	140 (Includes P/N 134 and 4419)
Application:	Provides for superimposing data on film with up to 250 sequential shots via operation with Magazine Back MF-4 (included) and optional Motor Drive MD-4; Operates with all Nikon F3-Series Cameras
Possible data:	Three possible, simultaneously: Year/month/day/hour/minute/second and hand-written data display
Power source:	Four 1.5v AA-type penlight alkaline batteries
Number of flashes:	Flash recycling time: 1 per second, 6 per second. Alkaline batteries: About 3000 flashes, About 500 flashes
Dimensions:	299mm(W) x 69mm(H) x 78mm(D)
Weight:	690g (MF-17 only)

Multi Data Back MF-19 for Nikon N2000

Product number:	4569
Possible data:	Five possible, only one of which is selectable at time: year/month/day/hour/minute or reference numbers to 999999
Interval function:	Makes it possible to set time intervals between successive shots and the number of shots per interval; maximum time interval equals 99:59:59; maximum of 99 shots per interval; maximum of 99 intervals
Timeswitch function:	Maximum 99 shots daily at the time set, for up to 99 days, or monthly on a fixed day for up to 99 months
Alarm function:	Provided; can be set to operate daily, if desired
Data imprinting:	Via six red LEDs (seven-segment type)
Data display on back:	Via LCD panel
Power source:	Two 1.5v silver-oxide button-cell type batteries
Dimensions:	147.4mm(W) x 53.2mm(H) x 24.5mm(D) (5.7″ x 2.1″ x 1.0″)
Weight:	90g (3.2 oz.) (without batteries)

Data Back MF-16 for FM2 Cameras

Product number:	4526
Possible data:	Three options only one of which is selectable at time: Year/month/day/hour/minute or reference numbers to 2000
Data imprinting:	Via six red LEDs
Data display:	Via LCD at rear of unit
Audible warning:	Provided; sounds for 20 sec. at the time set
Power source:	Two 1.5v silver-oxide button-cell type batteries
Dimensions:	142.7mm(W) x 53.2mm(H) x 26.5mm(D)
Weight:	90g (without batteries)
Optional accessories:	Case Base Portion CF-27D

MB-20 AA-Type Battery Pack

Product number: 4631
Application: 4-AA Battery Pack for F4S
Weight: Approx. 120g

MB-21 High-Speed Battery Pack (repl.)

Product number: 4632
Application: 6-AA Battery Pack for F4S
Weight: Approx. 295g

MB-22 External Power Regulator

Product number: 4633
Application: Enables MA-4 converter to be connected to F4S
Weight: Approx. 250g (8.8 oz.)

MB-23 Multi Power High-Speed Battery Pack

Product number: 4634
Application: Alternative accessory pack for Nikon F4S; accepts AA (holder for standard) or NiCad Pack MN-20 as accessory
Dimensions: Approx. 168.5mm(W) x 107.5mm(H) x 69.0mm(D)
Weight: Approx. 380g (without batteries)

MN-20 NiCad Battery Pack

Product number: 111
Application: NiCad Battery Pack for MB-23
Dimensions: Approx. 117.5mm(L) x 31.5mm(H) x 50.5mm(D)
Weight: Approx 240g

MH-20 NiCad Battery Charger

Product number: 112
Application: NiCad Battery Charger for MN-20 (can charge two batteries at one time)
Dimensions: 80mm(W) x 43mm(H) x 160mm(D)
Weight: 450g

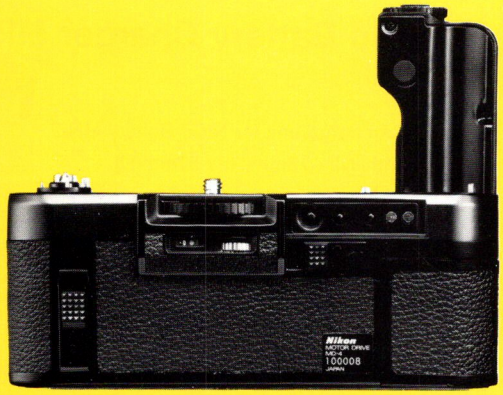

Motor Drive MD-4 for Nikon F3 Series

Product number:	120
Compatible cameras:	Nikon F3 Series
Shooting speeds:	Eight AA-type 1.5V alkaline batteries, Normal: 3.8, Mirror up: 4
	MN-2 NiCd battery unit, Normal: 5.5, Mirror up: 6
	MA-4 AC/DC Converter, Normal: 5, Mirror up: 5.5
	The firing rates decreases at shutter slower than 1/125 sec.
Shooting modes:	Single frame (S) continuous (C) via S-C mode selector; lock (L) position provided
Exposure meter power:	By electromagnetic trigger button; also switches on camera meter when depresses halfway: meter remains on for 16 seconds after finger is lifted from button
Weight:	16.9 oz (480g)
Dimensions:	155mm (W) x 146.5mm (H) x 71mm (H)

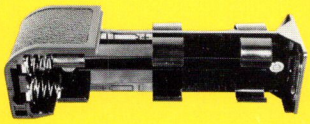

AA Battery Holder MS-3

Product number:	127
Application:	Holder for eight AA-type (penlight) batteries used to power the Motor Drive MD-4

Motor Drive MD-12 for Nikon FM2

Product number:	*102*
Compatible cameras:	Nikon FM2
Shooting speeds:	Up to about 3.5 fps (at shutter speeds of 1/123 sec. faster)
Shooting modes:	Single frame (S), continuous (C) via selector dial at top of grip on motor drive
Usable shutter speeds:	With "S" setting, 1-4000 sec. With "C" setting, 1/2-1/4000 sec.
Pilot light:	LED lights up during each film advance operation
Motor power switch:	On/Off switch provided at rear of MD-12
Exposure meter power:	The motor release button also serves as camera On/Off switch; power switches off automatically after approximately 50 seconds
Remote control:	Possible via integral 3-pin jack at front of motor drive
Power source:	AA-type (penlight) batteries (8 x 1.5VDC) via battery holder
Weight:	410g (without batteries)
Dimensions:	144mm(W) x 109.5mm(H) x 68.5mm(D)
Other accessories:	Miscellaneous Remote Control Cords MC-4A, MC-10, MC-12A

AA Battery Holder (for MD-12)

(Not Pictured)

Product number:	104
Application:	Holder for eight AA-type (penlight) batteries used to power the Motor Drive MD-12

NiCd Battery Charger MH-2

Nikon Advanced Systems Dealer

Product number: 126
Application: Quick-charge unit for NiCd Battery MN-2
Dimensions: 127mm(W) x 78mm(H) x 57mm(D)
Weight: 560g

NiCd Battery Unit MN-2

Nikon Advanced Systems Dealer

Product number: 125
Application: Rechargeable power source for Motor Drive MD-4
Recharging time: 3½ hours continuous charging
Dimensions: 114mm(W) x 43mm(H) x 37mm(D)
Weight: 250g

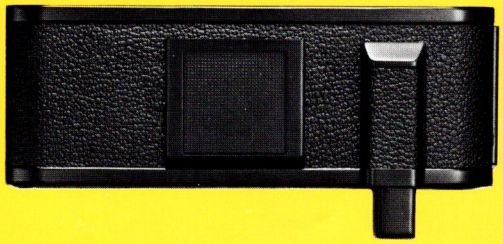

Auto-Rewind-Stop Camera Back MF-6B

Nikon Advanced Systems Dealer

Product number: 136
Application: Used in conjunction with Nikon F3-Series camera and Motor Drive MD-4 to provide for cessation of rewind operation with the film leader protruding from the film cassette
Other accessories: AC/DC Converter
Misc. Remote Control Cords MC-4A, MC-10, MC-12A

AC/DC Converter MA-4

Nikon Advanced Systems Dealer

Product number: 42
Application: Provides for continuous electrical power source to power Motor Drive MD-4; Power connecting Cord MC-11 required for operation with Motor Drive MD-4; MC-2 cord required for operation with earlier MD-1/2/3 motor for F2-Series cameras
Dimensions: 70mm(H) x 135mm(W) x 140mm(D)
Weight: 2400g

Intervalometer MT-2

Nikon Consumer Products Dealer

Product number: 128
Application: Provide precisely timed firing of motorized SLR cameras for technical applications such as time-lapse and work-sampling photography; Motor Connecting Cord MC-16A provided
Pulse duration: 0.1 sec to 30 min
Shooting interval: 0.1 sec to 27 hours
Power source: Four 1.5V AA-type (penlight) batteries
Battery tester: Provided
Remote trigger: Possible
Dimensions: 60mm(H) x 150mm(W) x 130mm(D)
Weight: 730g

Motor Connecting Cord MC-16A (replacement)

Nikon Consumer Products Dealer

Product number: 4587
Application: For connecting Intervalometer MT-2 to motorized camera

250-Exposure Film Cassette MZ-1

Nikon Advanced Systems Dealer

Product number: 2077

Application: Operation with 250-Exposure Magazine Back MF-4

Bulk Film Loader

Nikon Advanced Systems Dealer

Product number: 2080

Application: For use loading 250-Exposure Film Cassette MZ-1 with up to 250 frames

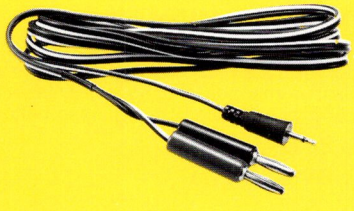

External Signal Connecting Cord MC-14

Nikon Advanced Systems Dealer

Product number: 135

Application: For remote operation with Magazine Back MF-4, it may be useful to know when the film is at an end or when the desired number given by the frame counter has been reached; the External signal connecting cord MC-14 is used for this purpose; One end of this cord fitted with the mini-plug is connected to the frame counter signal jack of the MF-4, and a suitable display system is connected to the other end; If desired, it is also possible to read off from a distance when the subtractive frame counter has reached the "0" setting

Modulite Remote Control Set ML-1

Product number:	72
Operating range:	Up to 60m (100 ft) maximum
Operating modes:	Single-frame (S) and continuous (C), as well as either of two channels (1 and 2) via selector
Power source:	Transmitter, four 1.5V AA-type (penlight) batteries; Receiver, one 9V alkaline battery
Operation life:	Approximately 750 firing cycles per set of fresh batteries
Camera connection:	Via MC-8A Motor Connection Cord (supplied) connected to remote control terminal provided on motor drive
Dimensions:	Transmitter, 40mm x 40mm x 130mm; Receiver, 50mm x 62mm x 80mm
Weight:	Transmitter, 130g (without batteries); Receiver, 170g (without battery)

Note: Receiver and transmitter units are also available separately.

Modulite Remote Control Set ML-2

Product number:	4641
Operating range:	100 meters
Operating modes:	
Power source:	Transmitter: 4 AA-Type batteries, Receiver: 4 AA-Type Batteries
Operation life:	Approximately 4,500 firing cycles per set of fresh alkaline maganese batteries, 2,400 with NiCd, 1,800 with standard manganese batteries
Dimensions:	To Be Determined
Weight:	To Be Determined

Wireless Remote Control Set MW-2

Product number:	141
Application:	For long-distance remote triggering of motorized Nikon SLR camera via connection to motor drive (except MD-E/14); hand-held transmitter activates camera-mounted receiver via radio signal
Operating range:	Up to approximately 700m-2,200 ft. under optimum conditions; up to approximately 150m (500 ft.) in city areas
Operating modes:	Any of seven combined settings of three channel selectors (CH-1, CH-2, CH-3) for control of multiple cameras via transmitter setting
Operation life:	In ready state, about 40 hours with alkaline batteries; for continuous operation, about 1 hour total operation time
Power source:	Four 1.5V AA-type (penlight) batteries for each unit
Dimensions:	Transmitter, 36mm x 70mm x 203mm Receiver, 36mm x 70mm x 203mm
Weight:	Transmitter, 364g (without batteries); Receiver, 354g (without batteries)

Motor Connecting Cord MC-8A (replacement)

Product number: 4585

Application: For connecting Modulite Remote Control Set ML-1 to motor drive remote terminal

Motor Remote Trigger Cord MC-10

Product number: 131

Application: For use with Motor Drives MD-2/3/4/12/15 for firing camera at distances to 10 ft; With the MC-10, the exposure meter of the Nikon FE2/FM2 cameras remain switched on until the motor drive power is switched off; with the Nikon F3/FA cameras, the finder display is not functional

Power Connecting Cord MC-11

Product number: 132

Application: For connecting AC/DC converter MA-4 and Motor Drive MD-4

Motor Remote Triggering Cord MC-12A

Product number: 4586

Application: For use with Motor Drives MD-4/12/15 to provide triggering at distances to 10 ft; the display in the Nikon F3/FA/N2020/N2000 viewfinder becomes visible when the release button of the MC-12A cord is gently depressed; the exposure meter of the Nikon FE2/FM2 remains switched on until the motor drive power is switched off

Motor Terminal Release MR-3

Product number: 4563

Application: For mounting on the standard remote control terminal of Nikon motor drives and motorized cameras to provide an alternate shutter release; fitted with tappered thread for connection of standard ISO-type cable release

Multi-Motor Connecting Cord MC-17

Product number: 137

Application: Simultaneous triggering of two motorized SLR cameras; cord length 3m (10 ft.)

Multi-Motor Connecting Cord MC-17S

Product number: 138

Application: Simultaneous triggering of two motorized SLR cameras; cord length 0.4m (15 in.)

Tripod Mounting Adapter AH-3

Product number: 4580

Application: For attaching Nikon Motor Drives MD-4/12/14/15 and camera bodies N2020/N2000 to a tripod or to Repro-copy Outfit PF-4

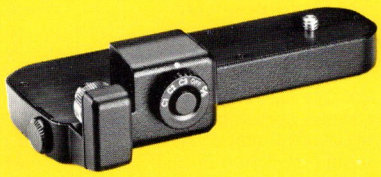

Firing Rate Converter MK-1

Product number: 121

Application: Enable the selection of specific firing rates for operation of Motor Drie MD-4

Shooting speeds: Selector provides firing choice of 1fps (C1), 2fps, (C2), 3fps (C3) or unrestricted speed as determined by motor operation (C/S)

Dimensions: 146.5mm x 33.5mm x 75mm

Weight: 150g

AA Battery Holder MB-3

Product number: 4570

Application: Accepts four 1.5V AA-type (penlight) batteries for heavy-duty shooting with motorized SLR cameras N2020/N2000; extends shooting with fresh set of batteries over that afforded with standard battery holder

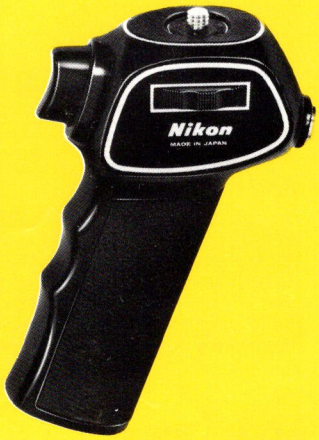

Pistol Grip Model II

Product number 45

Application: Screws into tripod socket and on camera or lenses tht have tripod collars. It provides a handgrip with trigger release when used with MC3A coiled cord.

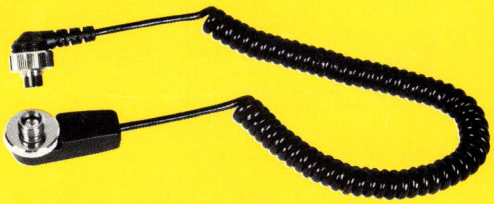

Coiled Cord MC-3A for Pistol Grip

Product number: 4582

Application: Enables electrical connection of Pistol Grip to Motor Drives MD-2/3/4/12/15 and motorized cameras N2020/N2000; when Pistol Grip is triggered, the camera is fired

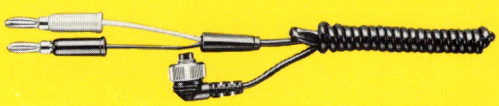

Motor Remote Cord MC-4A

Product number: 4583

Application: Provides for remote trigger connection with Motor Drives MD-2/3/4/12/15 and motorized cameras N2020/N2000; cord terminated in "banana plugs" for easy connection to miscellaneous electrical remote control devices

Speedlights

Camera / Flash	F4S	F3 Series	N8008(s)	N6006	N6000	N4004(s)/N5005	N2000	FM2
			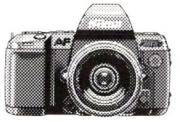					
SB-11	Via SC-23	Via SC-23	Via SC-23	Via SC-23	Via SC-23	Via SC-23	Via SC-23	
	Via SC-13		Via SC-13	Via SC-13	Via SC-13	Via SC-13	Via SC-13	Via SC-13
			w/sync cord & AS-15	w/sync cord & AS-15	w/sync cord & AS-15	w/sync cord & AS-15		
SB-14	Via SC-23	Via SC-23	Via SC-23	Via SC-23	Via SC-23	Via SC-23	Via SC-23	
	Via SC-13		Via SC-13	Via SC-13	Via SC-13	Via SC-13	Via SC-13	Via SC-13
			w/sync cord & AS-15	w/sync cord & AS-15	w/sync cord & AS-15	w/sync cord & AS-15		
SB-140	Via SC-23	Via SC-23	Via SC-23	Via SC-23	Via SC-23	Via SC-23	Via SC-23	
	Via SC-13		Via SC-13	Via SC-13	Via SC-13	Via SC-13	Via SC-13	Via SC-13
			w/sync cord & AS-15	w/sync cord & AS-15	w/sync cord & AS-15	w/sync cord & AS-15		
SB-16A		Direct or Via SC-14						
	Via Coupler AS-6		Via Coupler AS-6	Via Coupler AS-6	Via Coupler AS-6	Via Coupler AS-6 or 9	Via Coupler AS-6	Via Coupler AS-6
SB-16B	Direct or Via SC-17		Direct or Via SC-17	Direct or Via SC-17	Direct or Via SC-17	Direct or Via SC-17	Direct or Via SC-17	
		Via Coupler AS-4/7						Direct or Via SC-17
SB-17		Direct or Via SC-14						
	Via Coupler AS-6		Via Coupler AS-6	Via Coupler AS-6	Via Coupler AS-6	Via Coupler AS-6	Via Coupler AS-6	Via Coupler AS-6
SB-20/22					Direct or Via SC-17		Direct or Via SC-17	
		Via Coupler AS-4/7						Direct or Via SC-17
	Direct or Via SC-17		Direct or Via SC-17	Direct or Via SC-17		Direct or Via SC-17		
SB-21A		Direct						
	Via Coupler AS-6		Via Coupler AS-6	Via Coupler AS-6	Via Coupler AS-6	Via Coupler AS-6	Via Coupler AS-6	Via Coupler AS-6
SB-21B	Direct or Via SC-17		Direct or Via SC-17	Direct or Via SC-17	Direct or Via SC-17	Direct or Via SC-17	Direct or Via SC-17	
		Via Coupler AS-4/7						Direct or Via SC-17
SB-23					Direct or Via SC-17		Direct or Via SC-17	
		Via Coupler AS-4/7						Direct or Via SC-17
	Direct or Via SC-17		Direct or Via SC-17	Direct or Via SC-17		Direct or Via SC-17		
SB-24					Direct or Via SC-17		Direct or Via SC-17	
		Via Coupler AS-4/7						Direct or Via SC-17
	Direct or Via SC-17		Direct or Via SC-17	Direct or Via SC-17		Direct or Via SC-17		
SB-6	Via SC-9	Via SC-9	Via AS-15 & SC-9	Via AS-15 & SC-9	Via AS-15 & SC-9		Via SC-9	Via SC-9

TTL Automatic Control

Sensored Automatic Control

Manual Control

TTL Automatic Control and AF Illumination

Note: Box not applicable if notation is not included.

SB-11 Speedlight Set

Product number:	311
Light output control:	Silicon thyristor-controlled rectifier and series circuitry; automatic TTL flash output control with Nikon F3-series (via cord SC-12) and Nikon FA/FE2/N2020/N2000 (via cord SC-23); non-TTL automatic exposure control with other Nikon SLR cameras, via SU-2 Sensor Unit
Guide number:	GN 36, or GN 25 with SW-3 Wide-Flash Adapter (ISO 100 and meters)
Angle of coverage:	56° horizontal and 40° vertical as normal; 67° horizontal and 48° vertical with diffusion; SW-3 Wide-Flash Adapter provided
Number of flashes:	Approximately 150 full-power (M) bursts with fresh alkaline batteries; more in automatic modes of operation
Recycling time:	Approximately 8 sec. in manual (M) mode; faster in automatic modes of operation
Flash ready indicator:	Via flash "ready-light" at rear of flash unit and in camera viewfinder via accessory cords
Automatic operation:	Three-step automatic exposure control via SU-2 Sensor Unit; aperture settings (ISO 100) of f/4 at 0.6-9m, f/5.6 at 0.6-6.4m and f/8 at 0.6-4.5m
Power source:	Eight 1.5V AA-type (penlight) batteries
Camera mounting:	Via accessory SK-4 Flash Mounting Bracket
Dimensions:	276mm(H) x 104mm(W) x 118mm(D), without SK-4
Weight:	860g (31 oz.), flash unit only

SW-3 Wide-Flash Adapter (repl.)

Product number:	3057
Application:	Provide diffusion for operation with lenses to 28mm wide angle coverage; operable with SB-11 Speedlight

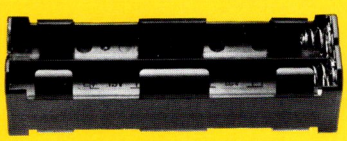

AA Battery Holder (repl.)

Product number:	3064
Application:	Provide mounting for eight AA-type batteries to power flash unit; operable with SB-11 Speedlight

SB-14 Speedlight Set with SD-7 Battery Pack

Nikon Advanced Systems Dealer

Product number:	4525
Light output control:	Silicon thyristor-controlled rectifier and series circuitry; automatic TTL flash output control with Nikon F3-series (via cord SC-12) and Nikon FA/FE2/N2020/N2000/N4004 (via cord SC-23); non-TTL automatic exposure control with other Nikon SLR cameras, via sensor unit SU-2
Guide number:	GN 32, or GN 22 with SW-5 Wide-Flash Adapter (ISO 100 and meters)
Angle of coverage:	67° horizontal and 48° vertical, as normal; 77° horizontal and 56° vertical with diffusion; SW-5 Wide-Flash Adapter provided
Number of flashes:	Approximately 270 full-power (M) bursts with fresh alkaline batteries; more in automatic modes of operation
Recycling time:	Approximately 8 sec. in manual (M) mode; faster in automatic modes of operation
Automatic operation:	Three-step automatic exposure control via SU-2 Sensor Unit; aperture settings (ISO 100) of f/4 at 0.6m-8m, f/5.6 at 0.6-5.6m and f/8 at 0.6-4m
Power source:	Six 1.5V C-type batteries via accessory SD-7 Battery Pack
Camera mounting:	Via accessory SK-5 Flash Mounting Bracket
Dimensions:	217mm(H) x 94mm(W) x 91mm(D), without SK-5; 95mm(H) x 200mm(W) x 45mm(D), SD-7
Weight:	515g (18 oz.), flash unit only; 440g (15 oz.), SD-7 without batteries

SD-7 Battery Pack (repl.)

Nikon CONSUMER PRODUCTS DEALER

Product number:	4520
Application:	Provides power for operation of SB-14/140 speedlight; alternate power source for SB-11/20/22
Dimensions:	95mm x 200mm x 45mm
Weight:	440g (15 oz.), without batteries

SW-5 Wide-Flash Adapter (repl.)

Nikon Advanced Systems Dealer

Product number:	4522
Application:	Provide diffusion for operation with lenses to 24mm wide angle coverage; operable with SB-14 Speedlight

SB-140 UV-IR Speedlight Set (For ultraviolet, visible and infrared photography)

Nikon Advanced Systems Dealer

Product number:	4512
Light output control:	Silicon thyristor-controlled rectifier and series circuitry; automatic TTL flash output control with Nikon F3-series (via cord SC-12); and Nikon FA/FE2/N2020/N2000 (via cord SC-23); TTL flash output control only for visible light; non-TTL automatic exposure control with other Nikon SLR cameras, via SU-2 Sensor Unit
Photographic filters/bands:	SW-5V Filter, 400-1100nm (for visible light); SW-5UV Filter, 300-400nm and above 650nm (for UV light); and SW-5IR Filter, 750-1100nm (for IR light)
Guide number:	GN 32 as normal with SW-5V for visible light (ISO 100 and meters); GN 22 with SW-5IR for infrared light; GN 16 with SW-5UV for ultra-violet light
Angle of coverage:	70° horizontal and 53° vertical, as normal for 28mm lenses
Number of flashes:	Approximately 270 full-power (M) bursts with fresh alkaline batteries; more in automatic modes of operation
Recycling time:	Approximately 9.5 sec. in manual (M) mode; faster in automatic modes of operation
Automatic operation:	Three-step automatic exposure control via SU-3 Sensor unit; aperture settings (ISO 100, visible light) of f/4 at 0.6-8m, f/5.6 at 0..6-5.6m and f/8 at 0.6-4m
Power source:	Six 1.5V C-type batteries via accessory SD-7 Battery Pack
Camera mounting:	Via accessory SK-5 Flash Mounting Bracket
Dimensions:	217mm(H) x 94mm(W) x 91mm(D), without SK-5
Weight:	515g (18 oz.), flash unit only

SD-7 Battery Pack

Nikon Consumer Products Dealer

Product number:	4520
Application:	Provide diffusion for operation with lenses to 24mm wide angle coverage; operable with SB-14 Speedlight
Automatic operation:	Three-step automatic exposure control via SU-1 Sensor Unit; aperture settings (ISO 100) of f/4 at 1m-11m, f/5.6 at 1-8m and f/8 at 1-5.5m 190mm x 128mm dia.

SD-8 High Performance Battery Pack

Nikon Consumer Products Dealer

Product number	4720
Application:	Designed for use with the Nikon SB-24, SB-22, SB-20 & SB-11 Speedlights. Increases flash recycling time by approximately 60–75%, and more than doubles flash capacity.

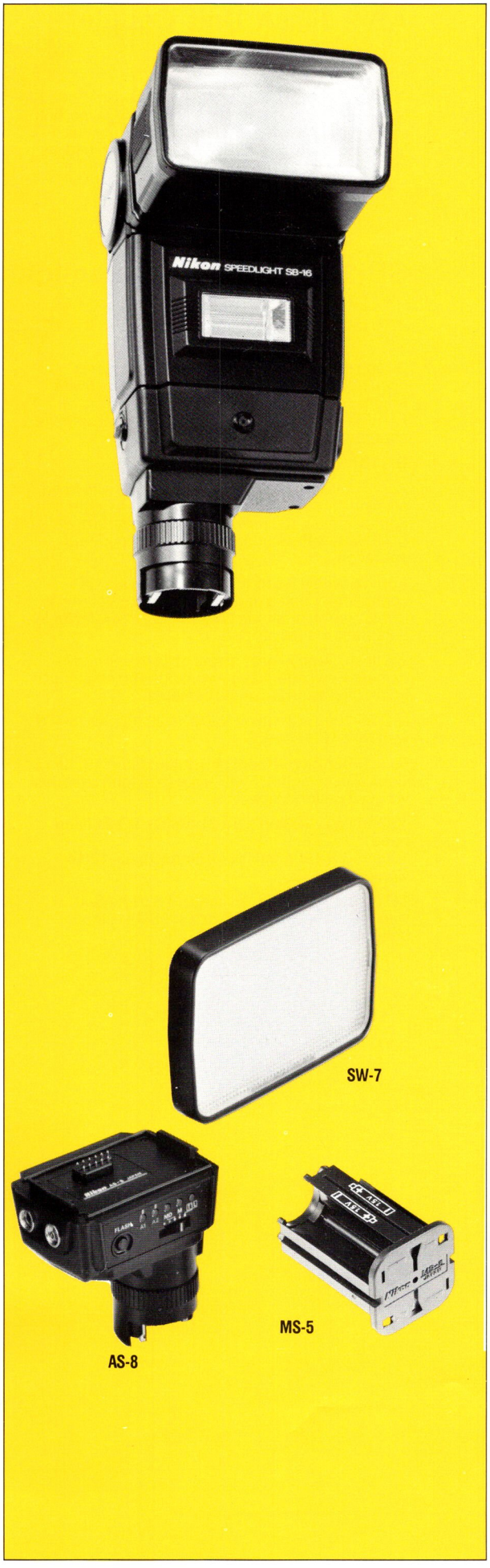

SB-16 TTL Speedlight

Nikon Advanced Systems Dealer

Product number:	4542 (SB-16A for F3-series cameras) 4543 (SB-16B for other models)
Light output control:	Silicon thyristor-controlled rectifier and series circuitry; automatic TTL flash output control with Nikon F3-series (SB-16A) or Nikon FA/FE2/N2020/ N2000/N4004 (SB-16B); non-TTL automatic exposure control with other Nikon SLR cameras
Guide number:	GN 32 with zoom head set at N or GN 19 at W1 with SW-7 Wide-Flash Adapter (ISO 100 and meters); GN 8 for secondary flash (ISO 100 and meters)
Angle of coverage:	60° horizontal and 45° vertical as normal; 78° horizontal and 68° vertical with diffusion; SW-7 Wide-Flash Adapter provided
Main flash head positioning:	Rotatable and tiltable; pull-out condenser (plus diffuser) for various focal lengths: Head position T for 85mm focal length Head position S for 50mm focal length Head position N for 35mm focal length Head position W1 for 28mm focal length Head position W1 (plus SW-7) for 24mm focal length
Secondary flash head positioning:	Rigid built-in; for illuminating shadows (or providing catch-light for the eyes in portraiture) whenever the main flash head is used for bounce-flash operation
TTL automatic exposure operation:	With applicable Nikon dedicated camera; film speed of ISO 25 to 400; usable aperture range of f/2 to f/22
Non-TTL automatic (A) operation:	Automatic exposure control via built-in light sensor; film speeds of ISO 25 to 1000; two aperture settings provided
Manual full power (M) operation:	Via "M" setting at rear of flash; full power output provided regardless of working distance
Manual low power (MD) operation:	Via "MD" setting at rear of flash; output reduced from GN 32 to GN 8 (ISO 100) to enable flash operation with motorized cameras to firing rate of 4 fps; up to maximum eight successive flashes possible at one time
Dimensions (WxHxD):	82mm(W) x 166.5mm(H) x 100mm(D) (SB-16A) 82mm(W) x 144mm(H) x 100mm(D) (SB-16B)
Weight:	510g (18 oz.) (SB-16A, without batteries) 470g (17 oz.), SB-16B, without batteries)

SW-7 Wide Flash Adapter (repl.)

Nikon CONSUMER PRODUCTS DEALER

Product number:	4550
Application:	Provides diffusion sufficient to enable use of speedlight unit with 24mm lens when main head set to W1 position; operable with SB-16A/B Speedlights

MS-5 AA Battery Holder (repl.)

Nikon CONSUMER PRODUCTS DEALER

Product number:	4552
Application:	Provides mounting for batteries used to power SB-16

AS-8 Flash Unit Coupler

Product number:	4544
Application:	Provides for mounting of SB-16 Speedlight head to F3-series camera hot shoe; provides all necessary inteface for full TTL flash-operation with these cameras; provided as standard equipment with SB-16A; optional for SB-16B

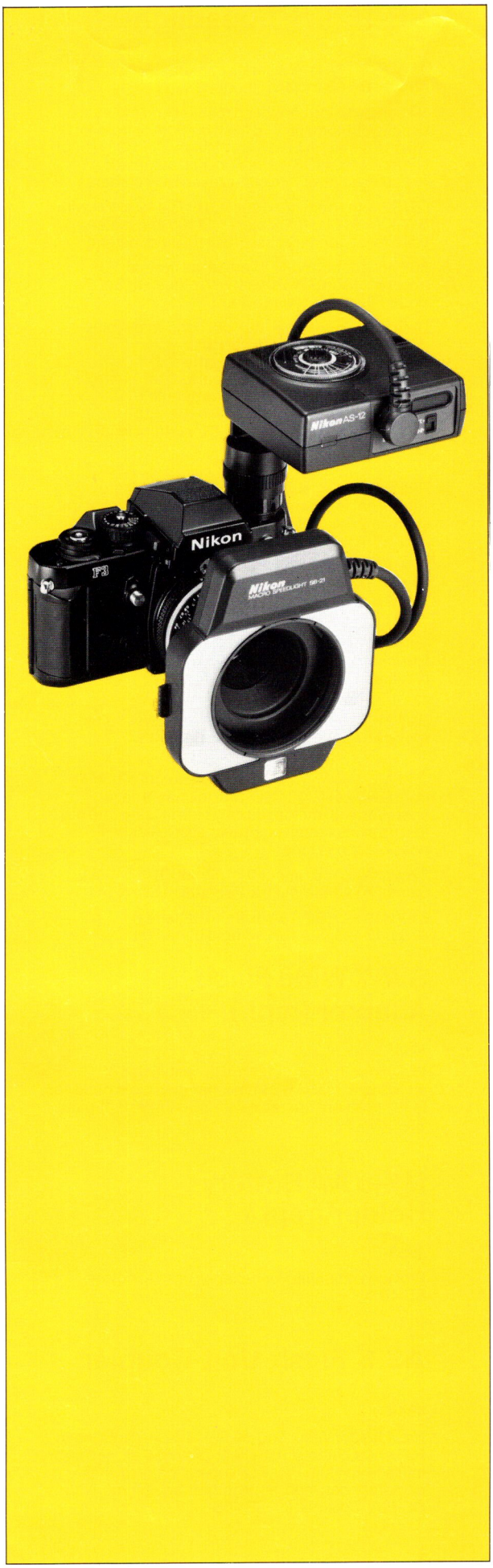

AS-9 Flash Unit Coupler

(Not Pictured)

Nikon CONSUMER PRODUCTS DEALER

Product number:	4545
Application:	Provides for mounting of SB-16 Speedlight head to Nikon SLR cameras equipped with ISO-type hot shoe; provides all necessary interface for full TTL flash operation with these cameras; provided as standard equipment with SB-16B; optional for SB-16A

SB-21 TTL Macro Speedlight

Nikon Advanced Systems Dealer

Product number:	4701 (SB-21A for F3-series cameras) 4702 (SB-21B for other models)
Light output control:	Silicon thyristor-controlled rectifier and series circuitry; automatic TTL flash output control with Nikon F3-series (SB-21A) or Nikon FA/FE2/N2020/N2000 (SB-21B); manual exposure control with other Nikon SLR cameras
Guide number:	GN 13 (ISO 100 and meters)
Number of flashes:	Approximately 200 full-power (M) bursts with fresh alkaline batteries via holder in AS-12/14 Controller; approximately 300 full-power (M) bursts via optional LD-2 Battery Pack; more in automatic modes of operation
Recycling time:	Approximately 8-sec. in manual (M) mode via controller-mounted batteries; approximately 4 sec. in manual (M) mode via LD-2 Battery Pack; faster in automatic modes of operation
Flash ready indicator:	Via flash "ready-light" at rear of flash unit and in camera viewfinder; contact provided for coupling to finder display in dedicated cameras
TTL film speed range:	ISO 25-1000 with Nikon N2000/N2020; ISO 25-400 with Nikon F3/FA/FE2
Power source:	Four 1.5V AA-type (penlight) batteries via AS-12/14 Controller or eight 1.5V AA-type (penlight) batteries via LD-2 Battery Pack
Dimensions:	130mm(W) x 120mm(H) x 21mm(D), SB-21 flash head; 100mm(W) x 90mm(H) x 41.6mm(D), AS-12/14 Controller Unit
Weight:	145g (5 oz.), SB-21 flash head; (9.8 oz.), AS-12 without batteries; 250g (8.8 oz.), AS-14 without batteries

SB-17 TTL Speedlight

Product number:	4547
Light output control:	Silicon thyristor-controlled rectifier and series circuitry; automatic TTL flash output control with Nikon F3-series cameras; non-TTL automatic exposure control with other Nikon SLR cameras
Guide number:	GN 25 or GN 18 with SW-6 wide-flash adapter (ISO 100 and meters)
Angle of coverage:	60° horizontal and 45° vertical as normal; 70° horizontal and 53° vertical with diffusion; SW-6 Wide-Flash Adapter provided
Number of flashes:	Approximately 160 full-power (M) bursts with fresh alkaline batteries; more in automatic modes of operation
Recycling time:	Approximately 8 sec. in manual (M) mode; faster in automatic modes of operation
Flash ready indicator:	Via flash "ready-light" at rear of flash unit and in camera viewfinder; contact provided for coupling to finder display in dedicated cameras
TTL automatic exposure operation:	With Nikon F3-Series cameras, film speeds of ISO 25 to 400; usable aperture range from f/2 to f/22 (ISO 100)
Manual full power (M) operation:	Via "M" at rear of flash; full power output provided regardless of working distance
Manual low power (MD) operation:	Via "MD" setting at rear of flash; output reduced from GN 25 to GN 7 (ISO 100) to enable flash operation with motorized cameras to firing rate of 3.5 fps; up to maximum four successive flashes possible at one time
Non-TTL automatic (A) operation:	Automatic exposure control via built-in light sensor; film speeds of ISO 25 to 800; aperture settings (ISO 100) of f/4 at 0.6 - 6.2m and f/8 at 0.6-3.1m
Power source:	Four 1.5V AA-type (penlight) batteries
Other features:	Open-flash button; sync flash terminal; TTL multi-flash terminal; bounce head pivots to 90°; supplied with SS-17 Pouch Case, MS-6 Battery Holder and SW-6 Wide-Flash Adapter
Dimensions:	101mm x 90mm x 42.5mm
Weight:	300g (11 oz.), without batteries

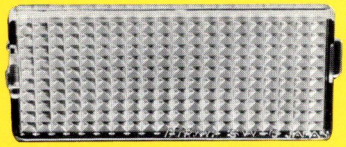

SW-6 Wide Flash Adapter (repl.)

Product number:	4521
Application:	Provides diffusion sufficient to enable use of speedlight unit with 28mm lens; operable with SB-15/17 Speedlights

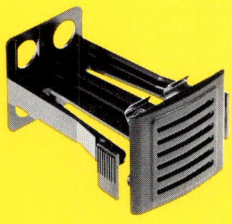

MS-6 AA Battery Holder (repl.)

Product number:	4553
Application:	Provides mounting for four AA-type penlight batteries; operable with SB-15/17 Speedlights

SB-20 AF TTL Speedlight

Product number:	4700
Type of unit:	High-power dedicated electronic flash unit equipped with AF Illuminator and capable of TTL automatic flash operation with most Nikon SLR cameras
Guide number:	72 to 118 (28mm to 85mm lens coverage) via rotatable flashtube mechanism (ISO 100, feet)
Number of flashes:	Approximately 150 full-power flashes with one set of fresh alkaline-manganese batteries
Special features:	Equipped with rotatable flashtube mechanism for multiple angles of coverage and for bounce operation; manual flash settings to 1/16 power level via built-in selector
Autofocus illuminator:	Provided for low-light AF operation with Nikon N2020, N4004 and N8008 autofocus SLR cameras
Power source:	Four AA-type (penlight) batteries; external power usable via special socket connection provided
Dimensions:	2.8″ x 4.3″ x 2.7″ (WxHxD)
Weight:	9.2 oz (without batteries)

AS-15 Sync Terminal Adapter

(Not Pictured)

Product number:	3066
Application:	Provides means to connect flash sync cords fitted with standard PC-type connector to the camera body via the built-in hot shoe; suitable for use with Nikon SLR cameras not fitted with PC-type sync terminal

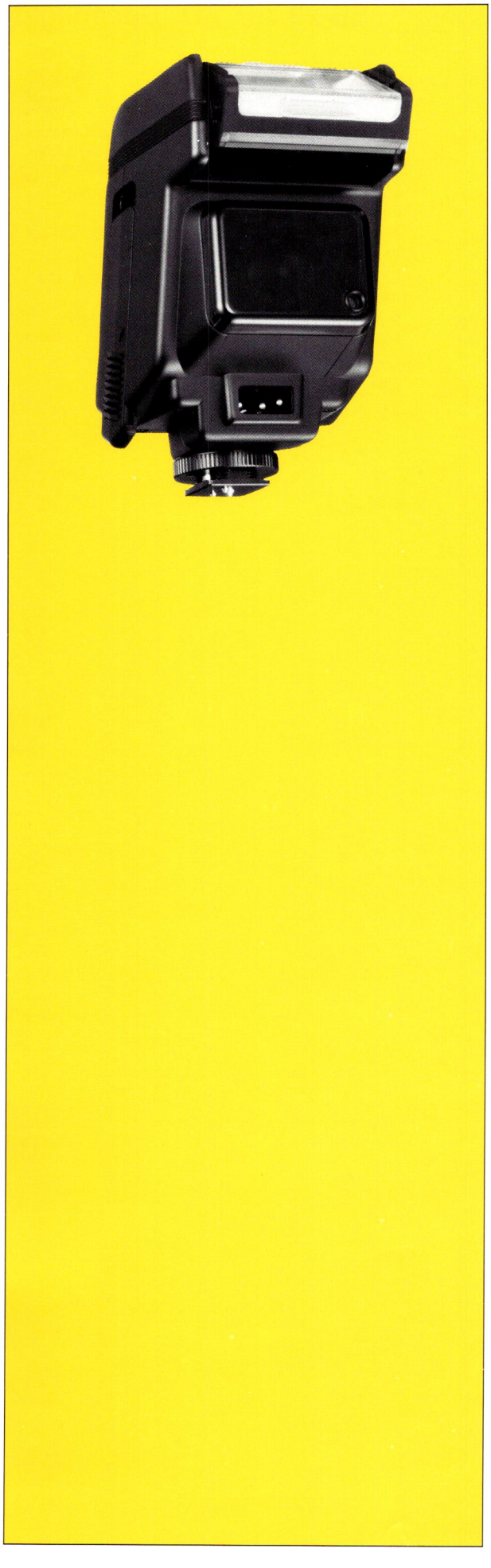

SB-22 AF TTL Speedlight

Product number:	4703
Light output control:	Silicon thyristor-controlled rectifier and series circuitry; automatic TTL flash output control with Nikon FA/FE2/N2020/N2000/N4004; non-TTL automatic exposure control with other Nikon SLR cameras
AF illuminator:	LED illuminator provided to project pattern whenever there is insufficient light for automatic focusing when using the N2020/N4004 autofocus cameras; this function works only with single-servo autofocus operation
Guide number:	GN 25, or GN 18 with wide-flash diffuser (ISO 100 and meters)
Angle of coverage:	60° horizontal and 45° vertical, as normal; 70° horizontal and 53° vertical with diffusion; wide-flash diffuser built-in
Bounce flash:	Flash head pivots for settings from -7° (7° downward) to +90° (vertical flash)
Number of flashes:	Approximately 200 full power (M) bursts with fresh alkaline batteries; more in automatic modes of operation
Recycling time:	Approximately 4 sec. in manual (M) mode; faster in automatic modes of operation
Flash ready indicator:	Via flash "ready-light" at rear of flash unit and in camera viewfinder; contact provided for coupling to finder display in dedicated cameras
TTL automatic operation:	With Nikon dedicated cameras; film speeds of ISO 25-400 (FA/FE2) or ISO 25-1000 (N2020/N2000); programmed TTL automatic flash mode only with Nikon N2020/N2000; usable aperture range from f/2 to f/22 (ISO 100)
Manual full power (M) operation:	Via "M" setting at rear of flash; full power output provided regardless of working distance
Manual low power (MD) operation:	Via "MD" setting at rear of flash; output reduced from GN 25 to GN 7 (ISO 100) to enable flash operation with motorized cameras to firing rate of 3.5 fps; up to maximum four successive flashes possible at one time; with SD-7 Battery Pack, up to 40 successive flashes possible
Non-TTL automatic (A) operation:	Automatic exposure control via built-in light sensor; film speeds of ISO 25-800; aperture settings (ISO 100) of f/4 at 0.6m-6.2m and f/8 at 0.6m-3.1m
Power switch:	Three position switch provided with "ON" "OFF" and "STBY" settings; at "STBY" with Nikon FA/FE2/N2020/N2000, switches off automatically within 1 to 2 minutes when not in use; the SB-22 can be switched on again by activating the camera's exposure meter
Power source:	1.5V AA-type (penlight) batteries or rechargeable NiCd batteries; optional SD-7 Battery Pack available as an accessory external battery power source; SD-7 uses six 1.5V C-type batteries
Dimensions:	68mm(W) x 105mm(H) x 80mm(D)
Weight:	250g (9 oz.), without batteries

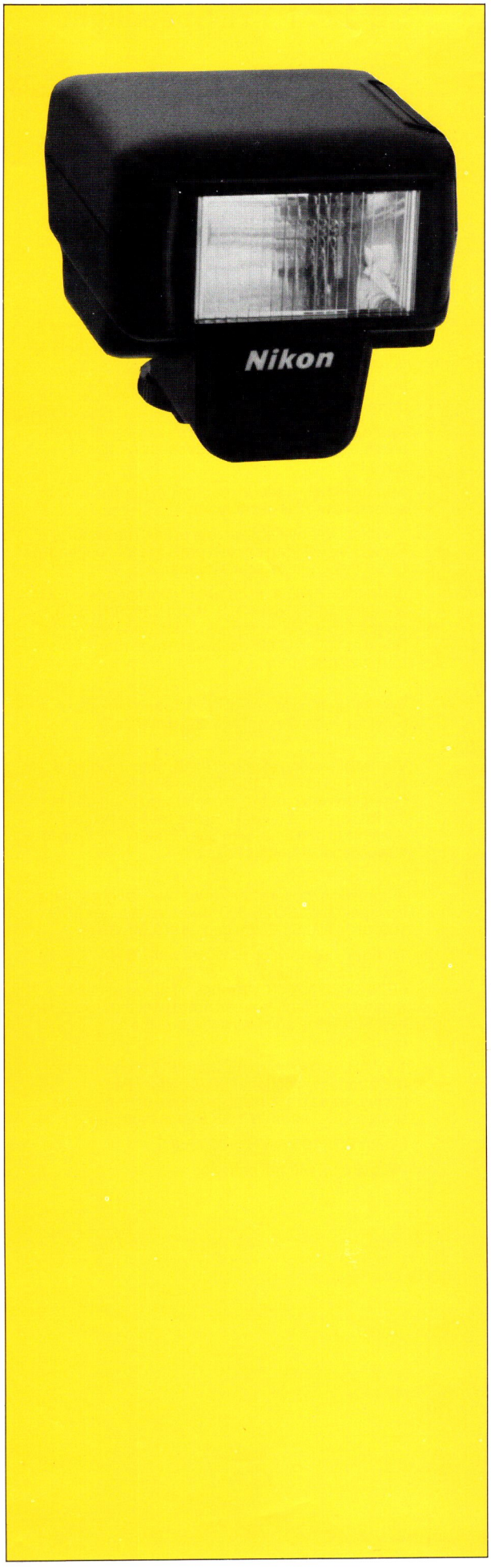

SB-23 AF TTL Speedlight

Product number:	4704
Type of unit:	Ultra-compact dedicated electronic flash unit equipped with AF Illuminator and capable of TTL automatic flash operation with most Nikon SLR cameras
Guide number:	66 (35mm lens coverage) via fixed flash head (ISO 100, feet)
Number of flashes:	Approximately 400 full-power flashes with one set of fresh alkaline-manganese batteries
Special features:	Equipped with automatic power off function and manual flash (full power) setting
Autofocus illuminator:	Provided for low-light AF operation with Nikon N2020, N4004 and N8008 autofocus SLR cameras
Power source:	Four AA-type (penlight) batteries
Dimensions:	2.5″ x 2.6″ x 3.3″ (WxHxD)
Weight:	4.9 oz (without batteries)

SB-24 AF TTL Speedlight

Nikon Advanced Systems Dealer

Product number:	4705
Type of unit:	High-power dedicated electronic flash unit equipped with AF Illuminator and capable of TTL automatic flash operation with most Nikon SLR cameras
Guide number:	98 to 164 (24mm to 85mm lens coverage) via power zoom head mechanism (ISO 100, feet)
Number of flashes:	Approximately 100 full-power flashes with one set of fresh alkaline-manganese batteries
Special features:	Equipped with zoom/bounce flash head, rear-curtain sync (N8008), manual flash settings to 1/16 power level and stroboscopic operation
Autofocus illuminator:	Provided for low-light AF operation with Nikon N2020, N4004 and N8008 autofocus SLR cameras
Power source:	Four AA-type (penlight) batteries; external power usable via special socket connection provided
Dimensions:	3.1″ x 5.2″ x 3.9″ (WxHxD)
Weight:	13.8 oz (without batteries)

SB-6 Repeating Flash

Nikon Advanced Systems Dealer

Product number:	290
Light output control:	Silicon thyristor-controlled rectifier and series circuitry; non-TTL automatic via SU-1 Sensor Unit and SC-9 Sensor Remote Cord
Guide number:	GN 45 as normal at manual full power setting (ISO 100 and meters); variable to GN 8 via power output level selector (ISO 100 and meters)
Angle of coverage:	56° horizontal and 40° vertical
Automatic operation:	Three-step automatic exposure control via SU-1 Sensor Unit; aperture settings (ISO 100) of f/4 at 1m-11 f/5.6 at 1-8m and f/8 at 1-5.5,
Dimensions:	190mm x 128mm dia.
Manual operation:	Six-step manual exposure control from "FULL" to "1/32" power levels; firing rate of 5-40 flashes/second with SA-3 AC Power Unit; can synchronize at motor drive speeds to 3.8 fps
Weight:	1100g (39 oz.), flash head only

SA-3 AC Power Unit

Nikon Advanced Systems Dealer

Product number:	291
Application:	Provide electric power for operation of SB-6 Repeating Flash
Dimensions (HxWxD):	191mm x 211mm x 116mm, without case; 218mm x 284mm x 125mm, with case
Weight:	About 10kg (22 lbs.)

AS-2

AS-3

AS-4

AS-5

AS-6

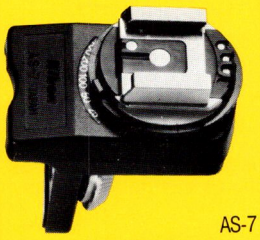
AS-7

AS-8

AS-1 Flash Unit Coupler

(Not Pictured)

Product number: 362

Application: Couples Speedlights with ISO-type mounting foot to hot shoe of Nikon F/F2-series cameras

AS-2 Flash Unit Coupler

Product number: 363

Application: Couples Nikon F/F2-dedicated Speedlights to ISO-type hot shoe of Nikon FA/FE/FM/FG/N2020/N2000/N4004/cameras

AS-3 Flash Unit Coupler

Product number: 353

Application: Couples Nikon F/F2-dedicated Speedlights to hot shoe of Nikon F3-series cameras

AS-4 Flash Unit Coupler

Product number: 354

Application: Couples Speedlights with ISO-type mounting foot to hot shoe of Nikon F3-series cameras; TTL coupling is not possible

AS-5 Flash Unit Coupler

Product number: 3059

Application: Couples Nikon F3-dedicated speedlights to hot shoe of Nikon F/F2-series cameras

AS-6 Flash Unit Coupler

Product number: 3060

Application: Couples Nikon F3-dedicated Speedlights to ISO-type hot shoe of Nikon FA/FF/FM/FG/N2020/N2000/N4004 cameras; TTL coupling is not possible

AS-7 Extension Coupler

Product number: 3065

Application: Provides offset mounting of speedlights for Nikon F3-series cameras to facilitate film rewind operation; maintain full coupling for F3-dedicated speedlights

AS-8 Flash Coupler

Product number: 4544

Application: Provides for mounting of SB-16 speedlight head to F3-series camera hot shoe; provides all necessary interface for full TTL flash operation with these cameras

AS-9 Flash Coupler

(Not Pictured)

Product number: 4545

Application: Provides for mounting of SB-16 speedlight head to Nikon SLR cameras equipped with ISO-type hot shoe; provides all necessary interface for full TTL flash operation with these cameras

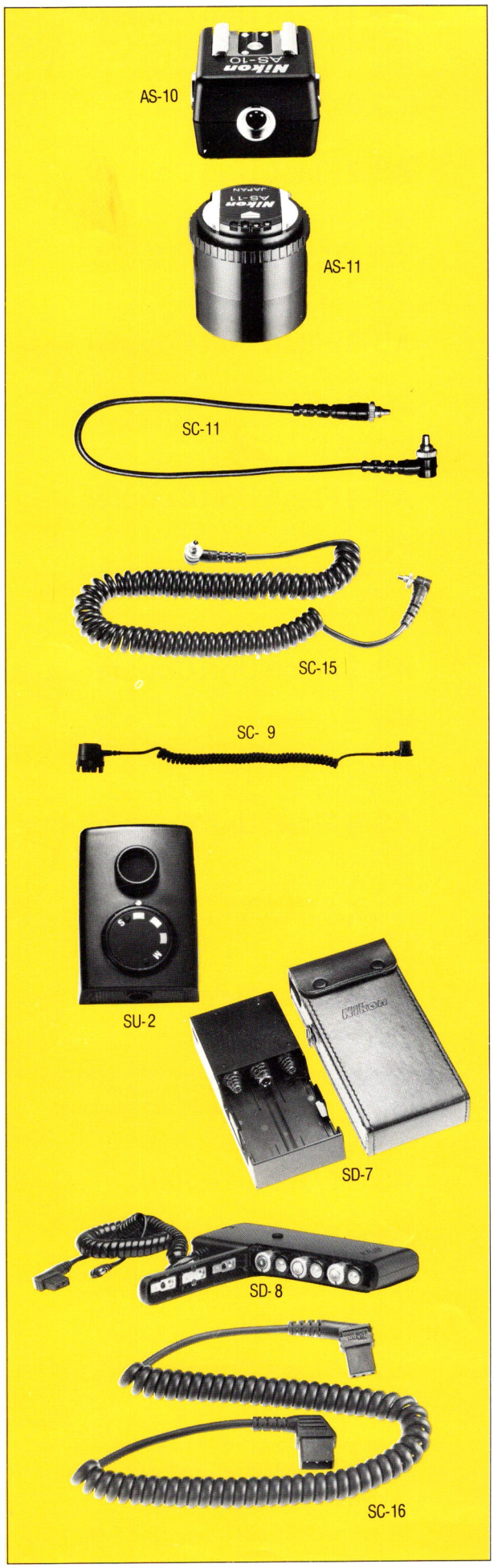

AS-10 TTL Multiflash Adapter

Product number: 4560

Application: Provides convenient connection point for TTL flash system components such as speedlight and multi-flash cords

AS-11 Tripod Adapter

Product number: 4561

Application: Provides means to connect F3-dedicated speedlights to tripod; provides mechanism to set ISO film speed to enable proper TTL speedlight operation free of ready light warning flashes

SC-11 Flash Sync Cord

Product number: 3056

Application: General-purpose flash sync cord; fitted with PC-type connector at both ends; connectors threaded for secure mounting; 15 inch length

SC-15 Coiled Sync Cord

Product number: 4524

Application: General-purpose flash sync cord providing identical function as SC-11; 3 ft. length (coiled cord)

SC-9 Sensor Remote Cord

Product number: 307

Application: Enables positioning of SU-1 sensor unit at camera hot shoe for more accurate flash exposures; operated in non-TTL automatic and manual exposure modes; 3 ft. length

SU-2 Sensor Unit

Product number: 3055

Application: Provide non-TTL automatic exposure control with SB-11/14 speedlight units

SD-7 Battery Pack

Product number: 4520

Application: Provide power for operation of SB-14/140 speedlights; alternate power source for SB-11/20/22

Dimensions: 95mm x 200mm x 45mm

Weight: 440g (15 oz.), without batteries

Note: When the SD-7 is used to power SB-11/20/22, the batteries of the flash unit must be removed.

SD-8 High Performance Battery Pack

Product number: 4720

Application: Designed for use with the Nikon SB-24, SB-22, SB-20 & SB-11 Speedlights. Increases flash recycling time by approximately 60–75%, and more than doubles flash capacity.

SC-16 Power Connecting Cord

Product number: 4523

Application: Provide connection for SD-7 to speedlight unit

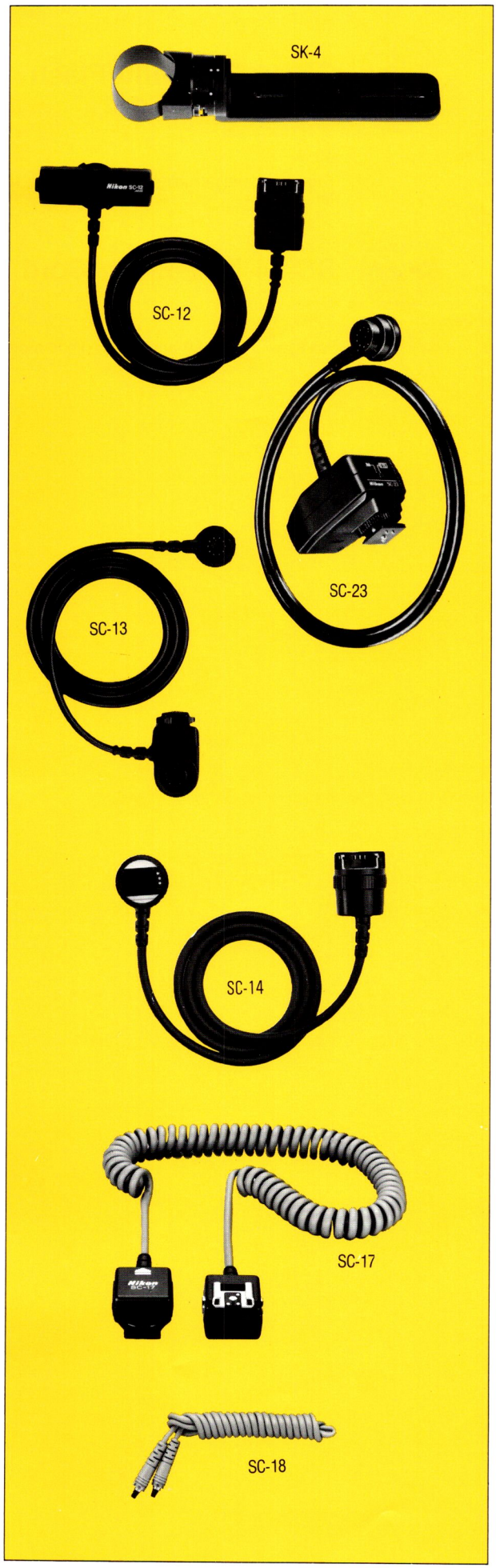

SK-4 Flash Mounting Bracket

Product number: 369

SK-5 Flash Mounting Bracket

Product number: 4539

SC-12 TTL Connecting Cord

Product number: 356

Application: Enables TTL automatic flash operation of SB-11/14/140 speedlights with Nikon F3-series cameras

SC-23 TTL Connecting Cord

Product number: 4562

Application: Enables TTL automatic flash operation of SB-11/14/140 speedlights with Nikon FA/FE2/N2020/N2000 cameras

SC-13 Sensor Remote Cord

Product number: 313

Application: Enables positioning of SU-2/3 sensor units at camera hot shoe for more accurate flash exposures; operates in non-TTL automatic and manual exposure modes; for general-purpose operation with SB-11/14/140 Speedlights

SC-14 TTL Sync Extension Cord

Product number: 3061

Application: Provides for off-camera positioning of F3-dedicated speedlights; provides full TTL flash coupling for operation with F3-series cameras

SC-17 TTL Sync Extension Cord

Product number: 4557

Application: Provides for off-camera positioning of speedlights fitted with ISO-type hot shoe; provides full TTL flash coupling

SC-18 TTL Multi-Flash Connecting Cord

Product number: 4548

Application: Provides for off-camera positioning of speedlights fitted with ISO-type hot shoe; provides full TTL flash coupling

SC-19

SC-19 TTL Multi-Flash Connecting Cord

Product number: 4559

Application: Provides identical function as SC-18 cord; 10 ft. length

SC-24 TTL Flash Cord

Product number: 3067

Application: For use with DW-20 and DW-21 finders only

Close-Up Equipment

Close-up Attachment Lenses
Nikon close-up attachment lenses occupy little space and are easy to carry along. They screw directly into the front thread of the lens (52/62mm diameter), providing a simple and convenient way of increasing magnification. The lenses have no effect on automatic exposure control and TTL metering. Nikon Integrated Coating (NIC) is applied for improving image contrast and reducing flare. Close-up attachment lenses no. 0, 1 and 2 are recommended for use with lenses having a focal length of up to 55mm. Lenses no. 3T and 4T are two-element achromat lenses providing high image quality, and are intended primarily for 85mm to 200mm lenses. The greater the diopter value of the attachment lenses, the closer the subject can be approached. The longer the focal length of the lens used, the greater the magnification which can be achieved. Nikon Close-up Attachment Lenses can be used with a large number of Nikkor and Series E lenses, either singly or in combination, and are an attractive option for beginners in close-up photography.

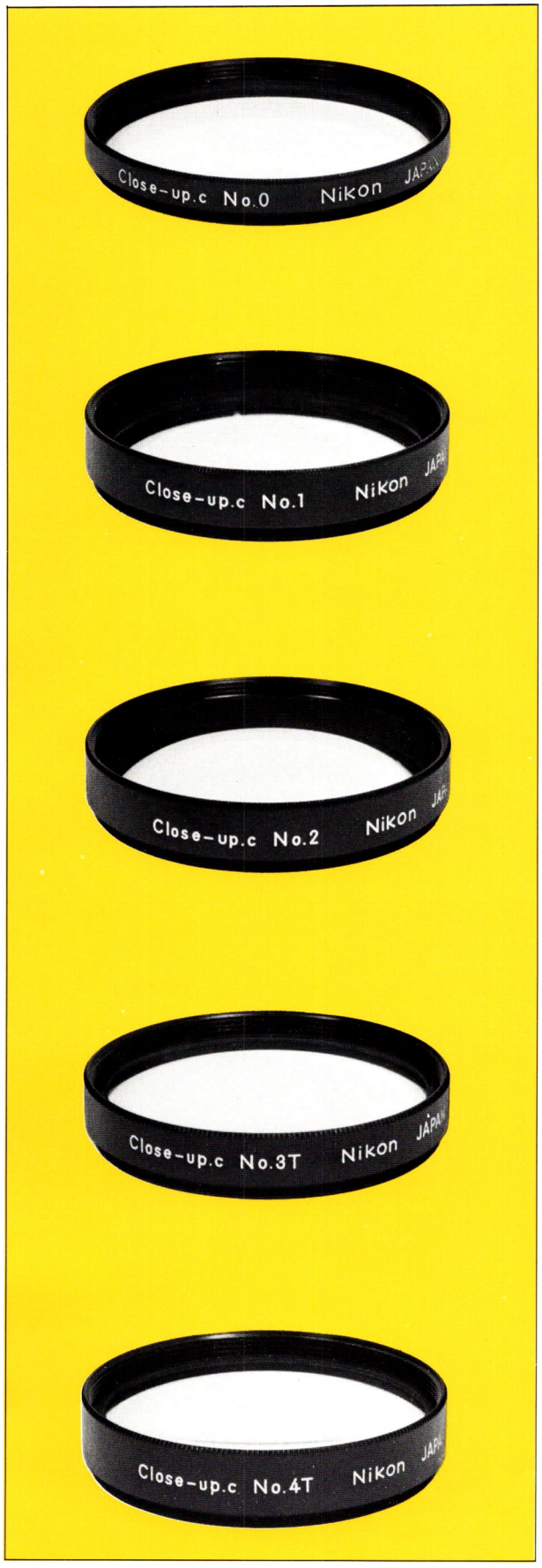

Close-up Attachment Lens no. 0

Product number: 2732
Application: Mounts to front of lens for general-purpose close-up photography; recommended for lenses to 55mm focal length
Mounting thread: 52mm dia. (P = 0.75mm)
Refractive power: 0.7 diopter

Close-up Attachment Lens no. 1

Product number: 2733
Application: Mounts to front of lens for general-purpose close-up photography; may be used in combination with no. 2 lens for even greater effects; recommended for lenses to 55mm focal length
Mounting thread: 52mm (P = 0.75mm)
Refractive power: 1.5 diopters

Close-up Attachment Lens no. 2

Product number: 2734
Mounting thread: 52mm (P = 0.75mm)
Refractive power: 3.0 diopters

Close-up Attachment Lens no. 3T

Product number: 2736
Application: Close-up photography with telephoto lenses; maybe used in combination with no. 4T lens for even greater effects
Mounting thread: 52mm (P = 0.75mm)
Refractive power: 1.5 diopters

Close-up Attachment Lens no. 4T

Product number: 2737
Application: Close-up photography with telephoto lenses; may be used in combination with no. 3T lens for even greater effects
Mounting thread: 52mm (P = 0.75mm)
Refractive power: 2.9 diopters

Close-up Attachment Lens no. 5T

(Not Pictured)
Product number: 4536
Application: Close-up photography with telephoto lenses; may be used in combination with no. 6T lens for even greater effects
Mounting thread: 62mm (P = 0.75mm)
Refractive power: 1.5 diopters

Close-up Attachment Lens no. 6T

(Not Pictured)
Product number: 4537
Application: Close-up photography with telephoto lenses; may be used in combination with no. 5T lens for even greater effects
Mounting thread: 62mm (P = 0.75mm)
Refractive power: 2.9 diopters

Reproduction Ratio Tables

	Lens	Lens-to-Subject Distance	Reproduction Ratio	Subject Area
Nr. 0	50mm f/1.4	46 –147	7,1–27	26 ×17 –97 ×65
	50mm f/1.8	38,1–150	5,4–27,4	19,3×12,9–98,5×65,7
	50mm f/1.2	41,6–151	6,2–27,4	22,2×14,8–98,5×65,6
	85mm f/2.0	60 –152	5,3–16,6	19,1×12,7–59,8×39,9
	105mm f/2.5	70 –153	5,0–13	18 ×12 –48 ×32
	135mm f/2.8	85 –156	4,6–10	17 ×11 –38 ×25
	135mm f/3.5	85 –155	4,6–10	17 ×11 –36 ×24
	200mm f/4.0	102 –162	3,2– 7,1	11,4× 7,6–25,4×16,9
	50mm f/1.8E	46,1–149	7,0–27	25,2×16,8–98,5×65,7
	100mm f/2.8E	65,9–151	4,8–14	17,4×11,6–50,8×33,9
Nr.1	50mm f/1.4	40 –78	5,7–13	20 ×14 –47 ×31
	50mm f/1.8	33,3–76,9	4,4–13	15,9×10,6–47 ×31,3
	50mm f/1.2	35,9–77,9	5,0–13	18 ×12 –46,9×31,3
	85mm f/2.0	47,2–78,4	3,9– 7,9	13,9× 9,3–28,5×19
	105mm f/2.5	53 –80	3,5– 6,4	13 × 8,4–23 ×15
	135mm f/2.8	62 –82	3,0– 5,0	11 × 7,3–18 ×12
	135mm f/3.5	61 –81	3,0– 5,0	11 × 7,2–18 ×12
	50mm f/1.8E	37,8–75,6	5,4–13	19,6×13 –47 ×31,3
	100mm f/2.8E	50,2–78,1	3,4– 6,7	12,3× 8,2–24,2×16,2
Nr.2	50mm f/1.4	31 –44	4,0– 6,5	14 × 9 –23 ×16
	50mm f/1.8	27,3–43,2	3,3– 6,6	11,9× 7,9–23,6×15,7
	50mm f/1.2	29,2–44,3	3,7– 6,6	13,2× 8,8–23,6×15,7
	85mm f/2.0	35,1–44,8	2,6– 4,0	9,2× 6,1–14,3× 9,6
	105mm f/2.5	39 –46	2,2– 3,2	8,0× 5,3–12 × 8
	135mm f/2.8	44 –49	1,8– 2,5	6,6× 4,4– 9 × 6
	135mm f/3.5	43 –48	1,8– 2,5	6,5× 4,3– 9 × 6
	50mm f/1.8E	29 –41,9	3,8– 6,6	13,7× 9,1–23,6×15,7
	100mm f/2.8E	36,3–44,5	2,2– 3,4	7,9× 5,2–12,2× 8,1

	Lens	Lens-to-Subject Distance	Reproduction Ratio	Subject Area
3T	85mm f/2	46 –77	3,8 –7,8	13,7× 9 –28 ×18,6
	100mm f/2.8 E	49,4–76,6	3,4 –6,7	12,2× 8,1–23,9×16,0
	105mm f/2.5	51 –78	3,3 –6,3	12 × 8 –22,7×15
	135mm f/2.8	57 –80	2,7 –4,9	10 × 6,6–17,6×11,7
	135mm f/3.5	57 –80	2,7 –4,9	10 × 6,5–17,6×11,7
	200mm f/4	64 –83	2,0 –3,3	7,2× 4,8–12 × 8
	75–150mm f/3.5 (75mm) E	54,9–83,2	4,2 –8,7	15,2×10,2–31,8×21,1
	75–150mm f/3.5 (100mm) E	54,9–83,2	3,2 –6,7	11,5× 7,7–23,9×15,9
	75–150mm f/3.5 (150mm) E	54,9–83,2	2,2 –4,6	7,8× 5,3–16,1×10,9
4T	85mm f/2	35 –44	2,5 –4,0	9 × 6 –14,2× 9,5
	100mm f/2.8 E	36,1–44,2	2,2 –3,4	7,9× 5,3–12,3× 8,2
	105mm f/2.5	38 –46	2,2 –3,2	7,8× 5,2–11,6× 7,7
	135mm f/2.8	41 –47	1,7 –2,5	6,1× 4,1– 9 × 6
	135mm f/3.5	41 –47	1,7 –2,5	6,1× 4,1– 9 × 6
	200mm f/4	48 –51	1,2 –1,7	4,2× 2,8– 6,1× 4,1
	75–150mm f/3.5 (75mm) E	42,2–50,8	2,8 –4,5	9,9× 6,7–16,2×10,8
	75–150mm f/3.5 (100mm) E	42,2–50,8	2,1 –3,4	7,5× 5,1–12,2× 8,2
	75–150mm f/3.5 (150mm) E	42,2–50,8	1,5 –2,3	5,1× 3,5– 8,3× 5,6
3T+4T	85mm f/2	29,2–33,5	1,9 –2,7	6,8× 4,6– 9,4× 6,2
	100mm f/2.8 E	29,8–33,1	1,6 –2,3	5,8× 3,9– 8,2× 5,4
	105mm f/2.5	31,8–35,1	1,6 –2,2	5,8× 3,8– 7,7× 5,1
	135mm f/2.8	34,6–36,6	1,2 –1,7	4,4× 2,9– 6 × 4
	135mm f/3.5	34,7–36,5	1,3 –1,7	4,6× 3,1– 6 × 4
	200mm f/4	40 –40	0,38–1,1	3 × 2 – 4 × 2,7

	Lens	Lens-to-Subject Distance	Reproduction Ratio	Subject Area
5T	35–70mm f/3.5 (35mm)	45 –81	9,4–18,5	34 ×23 –67 ×44
	35–70mm f/3.5 (50mm)	45 –81	6,9–13,5	25 ×17 –47 ×31
	35–70mm f/3.5 (70mm)	45 –81	4,9– 9,7	18 ×12 –35 ×23
	105mm f/1.8	52 –79	3,3– 6,3	12 × 8 –23 ×15
	80–200mm f/4 (80mm)	62 –87	4,4– 8,3	16 ×11 –30 ×19
	80–200mm f/4 (105mm)	62 –87	3,3– 6,3	12 × 8 –23 ×15
	80–200mm f/4 (135mm)	62 –87	2,6– 4,9	9,4× 6,2–18 ×12
	80–200mm f/4 (200mm)	62 –87	1,8– 3,4	6,5× 4,3–12 × 8,2
	70–210mm f/4 (70mm) E	61,5–83	5,6– 9,3	20 ×13 –34 ×22
	70–210mm f/4 (105mm) E	61,5–83	3,8– 6,3	14 × 9 –23 ×15
	70–210mm f/4 (135mm) E	61,5–83	3,0– 4,9	11 × 7 –18 ×12
	70–210mm f/4 (210mm) E	61,5–83	2,0– 3,3	7 × 4,8–12 × 8
6T	35–70mm f/3.5 (35mm)	36 –49	6,6– 9,5	24 ×16 –23 ×34
	35–70mm f/3.5 (50mm)	36 –49	4,8– 6,9	17 ×12 –25 ×17
	35–70mm f/3.5 (70mm)	36 –49	3,4– 5	12 × 8,2–18 ×12
	105mm f/1.8	38 –47	2,2– 3,3	8 × 5,3–12 × 8
	80–200mm f/4 (80mm)	47 –54	2,8– 4,3	10 × 6,7–15 ×10
	80–200mm f/4 (105mm)	47 –54	2,1– 3,2	7,6× 5 –12 × 7,7
	80–200mm f/4 (135mm)	47 –54	1,7– 2,5	6 × 4 – 9 × 6
	80–200mm f/4 (200mm)	47 –54	1,1– 1,8	4 × 2,6– 6,5× 4,3
	70–210mm f/4 (70mm) E	44,5–51	3,5– 4,8	13 × 8,4–17 ×11,5
	70–210mm f/4 (105mm) E	44,5–51	2,4– 3,3	8,6× 5,8–12 × 8
	70–210mm f/4 (135mm) E	44,5–51	1,8– 2,5	6,5× 4,3– 9 × 6
	70–210mm f/4 (210mm) E	44,5–51	1,2– 1,7	4,3× 2,9– 6 × 4

	Lens	Lens-to-Subject Distance	Reproduction Ratio	Subject Area
5T+6T	35–70mm f/3.5 (35mm)	31 –38	5,0 –6,3	18 ×12 –23 ×15
	35–70mm f/3.5 (50mm)	31 –38	3,7 –4,6	13 × 9 –17 ×11
	35–70mm f/3.5 (70mm)	31 –38	2,6 –3,3	9,4× 6,2–12 × 7,9
	105mm f/1.8	32 –36	1,6 –2,2	5,8× 3,8– 8 × 5,3
	80–200mm f/4 (80mm)	41 –43	2,1 –2,8	7,6× 5 –10 × 6,7
	80–200mm f/4 (105mm)	41 –43	1,5 –2,2	5,4× 3,6– 8 × 5,3
	80–200mm f/4 (135mm)	41 –43	1,2 –1,7	4,3× 2,9– 6,1× 4
	80–200mm f/4 (200mm)	41 –43	0,84–1,2	3 × 2 – 4,3× 2,9
	70–210mm f/4 (70mm) E	37,5–40	2,5 –3,2	9 × 6 –11,5× 7,7
	70–210mm f/4 (105mm) E	37,5–40	1,7 –2,2	6 × 4 – 8 × 5,3
	70–210mm f/4 (135mm) E	37,5–40	1,3 –1,7	4,7× 3,1– 6 × 4
	70–210mm f/4 (210mm) E	37,5–40	0,9 –1,1	3,2× 2,2– 4 × 2,6

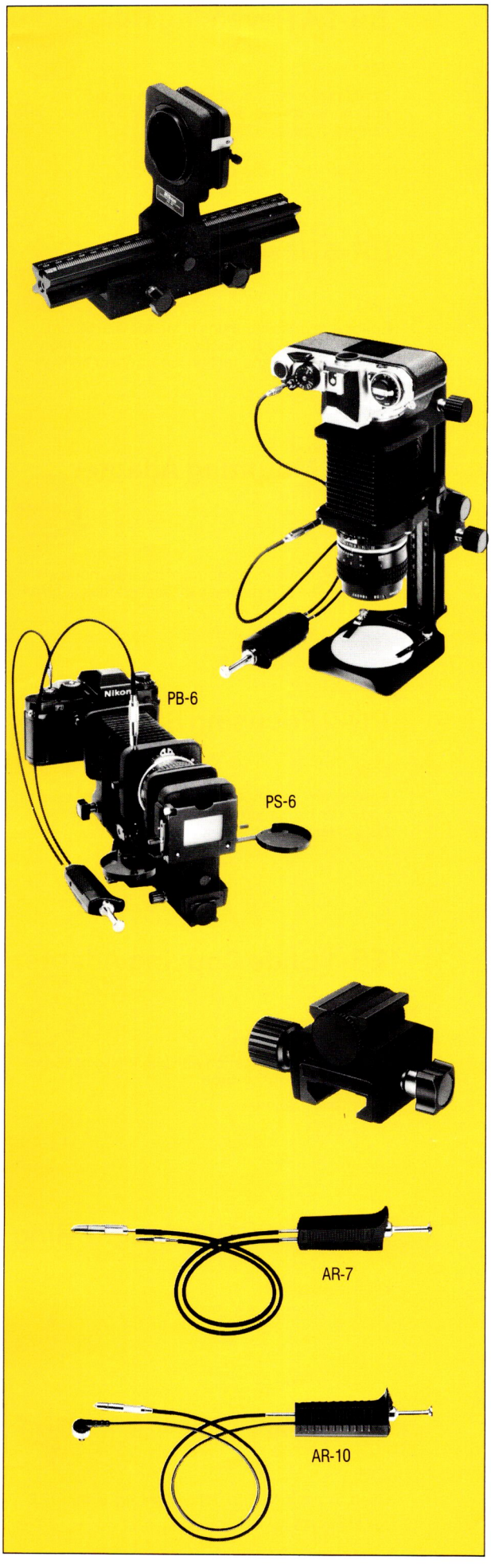

PB-6E Extension Bellows

Nikon Advanced Systems Dealer

Product number: 2663
Bellows extension: 83mm-438mm (PB-6/PB-6E combined)
Magnification: See accompanying table
Dimensions: 82mm(W) x 155mm(H) x 230mm(L)
Weight: 800g (1.8 lbs.)

PB-6M Macro Copy Stand

Nikon Advanced Systems Dealer

Product number: 2662
Magnification: See accompanying table
Dimensions: 90mm(W) x 144mm(D) x 27mm(H)
Weight: 177g (6.2 oz.)

PB-6 Bellows Focusing Unit

Nikon Advanced Systems Dealer

Product number: 2660
Bellows extension: 48mm-208mm
Magnification: ***Example***
50mm f/1.4
Normal: 1/1.1x-4x
Reverse: 1.1x-3.9x
See accompanying table
Dimensions: 98mm(W) x 155mm(H) x 238mm(L)
Weight: 1000g (2.23 lbs.)

PS-6 Slide Copying Adapter

Nikon Advanced Systems Dealer

Product number: 2661
Originals copied: 35mm mounted transparencies (up to 4mm thickness) or unmounted in strips or rolls
Suitable lenses: 20mm-55mm
Reproduction ratio: See accompanying table
Holder adjustments: 6mm upwards and downwards; 9mm to each side
Bellows extension: 60mm
Dimensions: 88mm(H) x 118mm(W) x 42mm(D)
Weight: 300g (11 oz.)

PB-6D Bellows/Rail Spacer

Nikon Advanced Systems Dealer

Product number: 2664
Application: Mounts between bellows standard and rail to provide sufficient clearance to enable motorized cameras to operate with bellows system; two required

AR-4 Double Cable Release

Nikon Advanced Systems Dealer

Product number: 2636
Application: For use with cameras equipped with Nikon-type shutter release button mounting thread

AR-7 Double Cable Release

Nikon Advanced Systems Dealer

Product number: 668
Application: For use with cameras equipped with ISO-type tappered shutter release button mounting thread

AR-10 Double Cable Release

Nikon Advanced Systems Dealer

Product number: 2670
Application: For use with motorized cameras fitted with a remote control release terminal

BR-2 A

BR-5

BR-3

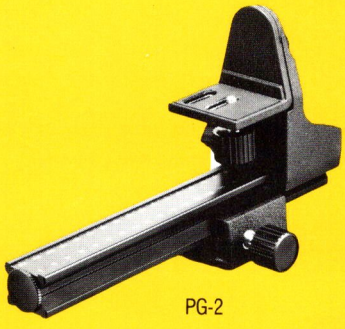

PG-2

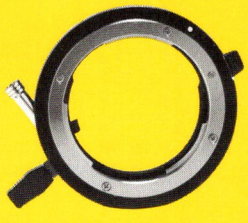

BR-2A Reversing Ring

Product number: 2657

Application: Enables reverse mounting of lenses with 52mm attachment thread; provides for direct connection to camera or bellows lens mount

BR-5 Reversing Ring

Product number: 2631

Application: Enables reverse mounting of lenses with 62mm attachment thread; must be used in combination with BR-2/2A for connection to camera or bellows

BR-3 Mounting Adapter Ring

Product number: 2629

Application: Converts the bayonet mount of reverse-mounted lenses to the 52mm thread for accessories such as filters and hoods

PG-2 Focusing Stage

Product number: 2756

Application: Permits precise fine focusing by shifting the camera body; can be mounted either vertically or horizontally; equipped with tripod mount

ES-1 Slide Copying Adapter

Product number: 3213

Application: Enables slide duplication with Micro-Nikkor 55mm and PK-13 extension tube

Dimensions: 72mm dia. x 80mm

Weight: 150g (5 oz.)

BR-6 Auto Diaphragm Ring

Product number: 2658

Application: For use with bellows (PB-6)

UR-3 Adapter Ring

Product number: 2396

Application: Used to mount SB-21 Macrolight on 60mm f2.8 AF Micro-Nikkor

Reproduction Ratios Obtainable with PB-6/6E

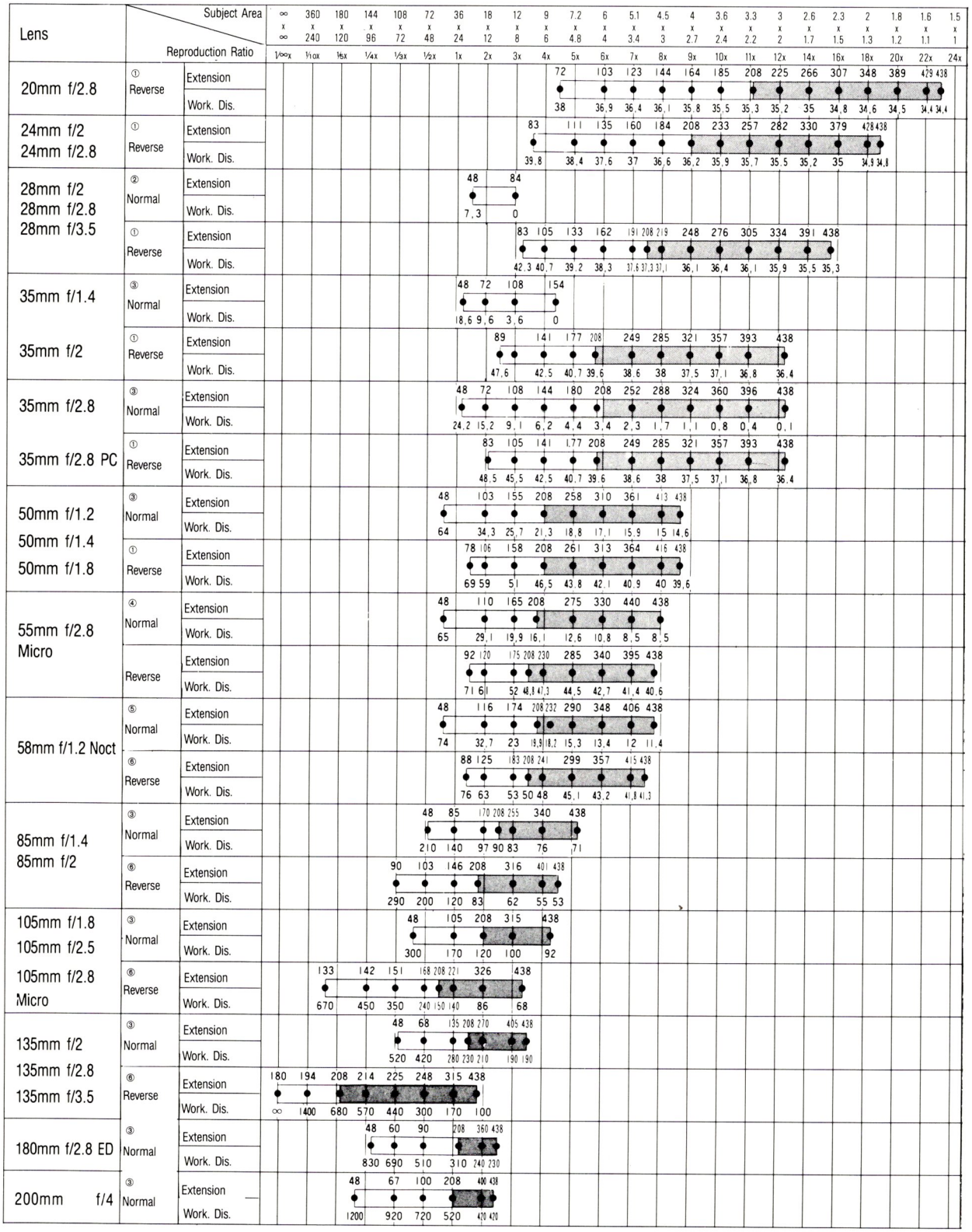

Working distance:
Distance between subject (in sharp focus) and the front edge of the lens barrel. If the lens is reverse-mounted, this distance is the distance between the subject and the rear edge of the lens.

= only with PB-6

= with PB-6 and PB-6E in combination

Notes:
1) Magnification at Infinity setting.
2) If there are several lenses, the magnification data applies only to the first lens (e.g. for 24mm f/2.8 and F/2, it applies to 24mm f/2.8).
3) The 135mm f/2 and PC-Nikkor 28mm f/3.5 lenses cannot be reverse-mounted since the diameters of the front rings are too large.
4) For close-up and macrophotography, we particularly recommend the following lenses: Micro-Nikkor 55mm f/2.8 and Micro-Nikkor 105mm f/2.8.

Notes:
1) Optimum picture quality with f/8
2) The smaller the aperture the better the picture quality; unsuitable for reproduction.
3) The smaller the aperture the better the picture quality.
4) Optimum picture quality with f/8; the quality deteriorates with smaller apertures; The 50mm f/1.2 lens is not suitable for reproduction.
5) Unsuitable for reproduction.
6) The picture quality in the corners becomes poorer with low magnification.

Reproduction Ratios with PS-6

Lens	Subject Area / Reproduction Ratio		∞ x ∞	360 x 240	180 x 120	144 x 96	108 x 72	72 x 48	36 x 24	18 x 12	12 x 8	9 x 6	7.2 x 4.8	6 x 4	5.1 x 3.4	4.5 x 3	4 x 2.7	3.6 x 2.4	3.3 x 2.2	3 x 2	2.6 x 1.7	2.3 x 1.5	2 x 1.3	1.8 x 1.2	1.6 x 1.1	1.5 x 1
			1/∞x	1/10x	1/5x	1/4x	1/3x	1/2x	1x	2x	3x	4x	5x	6x	7x	8x	9x	10x	11x	12x	14x	16x	18x	20x	22x	24x
20 mm f/2.8	Reverse	Extension											72	83	103	123	144		166								
		Work. Dis.											38	38	37	36	36		36								
24mm f/2 24mm f/2.8	Reverse	Extension										83		111	135		160	170									
		Work. Dis.										40		38	38		37	37									
28mm f/2 f/2.8, f/3.5	Reverse	Extension										83	105		133		162	170									
		Work. Dis.										42	41		39		38	38									
35mm f/1.4, f/2 f/2.8, f/2.8 PC	Reverse	Extension										89	105		141		165										
		Work. Dis.										48	46		43		41										
50mm f/1.2 50mm f/1.4 50mm f/1.8	Normal	Extension							48		103				153												
		Work. Dis.							64		34				26												
	Reverse	Extension								78	106				156												
		Work. Dis.								69	59				51												
55 mm f/2.8 Micro	Normal	Extension							48	55					129												
		Work. Dis.							65	57					25												
	Reverse	Extension								92	120				152												
		Work. Dis.								71	61				55												

Reproduction Ratios Obtainable with PB-6M

Lens	Subject Area / Reproduction Ratio		∞ x ∞	360 x 240	180 x 120	144 x 96	108 x 72	72 x 48	36 x 24	18 x 12	12 x 8	9 x 6	7.2 x 4.8	6 x 4	5.1 x 3.4	4.5 x 3	4 x 2.7	3.6 x 2.4	3.3 x 2.2	3 x 2	2.6 x 1.7	2.3 x 1.5	2 x 1.3	1.8 x 1.2	1.6 x 1.1	1.5 x 1
			1/∞x	1/10x	1/5x	1/4x	1/3x	1/2x	1x	2x	3x	4x	5x	6x	7x	8x	9x	10x	11x	12x	14x	16x	18x	20x	22x	24x
20mm f/2.8	Reverse	Extension											72	83	103	123	144	164	169								
		Work. Dis.											38	38	37	36	36	36	36								
24mm f/2 24mm f/2.8	Reverse	Extension										83		111	135		160	173									
		Work. Dis.										40		38	38		37	37									
28mm f/2 28mm f/2.8 28mm f/3.5	Normal	Extension								48	57				88												
		Work. Dis.								8	5				0												
	Reverse	Extension										83	105		133		162	172									
		Work. Dis.										42	41		39		38	38									
35mm f/1.4 35mm f/2 35mm f/2.8 35mm F/2.8 PC	Normal	Extension								48	72		108		144	154											
		Work. Dis.								19	10		4		1	0											
	Reverse	Extension										89	105		141		163										
		Work. Dis.										48	46		43		41										
50mm f/1.2 50mm f/1.4 50mm f/1.8	Normal	Extension							48		103				156												
		Work. Dis.							64		34				26												
	Reverse	Extension								78	106				159												
		Work. Dis.								69	59				51												
55mm f/2.8 Micro	Normal	Extension							48		110				144												
		Work. Dis.							65		29				23												
	Reverse	Extension								92	121				155												
		Work. Dis.								71	61				54												

Working distance:
Distance between subject (in sharp focus) and the front edge of the lens barrel. If the lens is reverse-mounted, this distance is the distance between the subject and the rear edge of the lens.

Notes:
1) Magnification at infinity setting.
2) If there are several lenses, the magnification data applies only to the first lens (e.g. for 24mm f/2.8 and F/2, it applies to 24mm f/2.8).
3) The 135mm f/2 and PC-Nikkor 28mm f/3.5 lenses cannot be reverse-mounted since the diameters of the front rings are too large.
4) For close-up and macrophotography, we particularly recommend the following lenses: Micro-Nikkor 55mm f/2.8 and Micro-Nikkor 105mm f/2.8.

PK-11A Extension Tube

Product number: 2656
Extension: 8mm
Dimensions: 64.4mm dia. x 17.8mm
Weight: 50g (2 oz.)

PK-12 Extension Tube

Product number: 2652
Extension: 14mm
Dimensions: 64.4mm dia. x 23.6mm
Weight: 75g (2 oz.)

PK-13 Extension Tube

Product number: 2653
Extension: 27.5mm (for Micro-Nikkor 55mm)
Dimensions: 64.4mm dia. x 30.5mm
Weight: 3 oz.

PN-11 Extension Tube

Product number: 2647
Extension: 52.2mm (for Micro-Nikkor 105mm)
Dimensions: 70.5mm dia. x 67mm
Weight: 245g (9 oz.)

Extension Tube (combination)	Total
Extension Tube (combination)	Extension
PK-11A	8mm
PK-12	14mm
PK-11A (+ PK-12)	22mm
PK-13	27.5mm
PK-11A (+ PK-13)	35.5mm
PK-12 (+ PK-13)	41.5mm

Auto Extension Tubes

The Nikon auto extension tubes can be attached to your camera bayonet with a simple action and permit a large number of different magnifications. These four tubes (PK-11, 12 and 13 and the PN-11) can be used either singly or in combination between camera and lens and retain the automatic function and meter coupling of the Nikkor and Series E lenses. In other words, the picture composition, focusing and metering can be carried out at the bright, full-aperture position without having to stop down the lens manually before shooting. These extension tubes have no effect on automatic exposure control of the corresponding Nikon cameras.

Nikkor 20mm f/2.8

Extension Tube	Reproduction Ratio	Subject Area	Film-Plane-to-Subject Distance	Exposure Factor
–	1/∞–1/10,8	∞×∞–10,2×15,3 ∞×∞–25,9×38,9	∞–11,8 ∞–30,0	1–1,1
PK-11	1/2,6–1/2,1	2,4×3,6–2,0×2,9 6,1×9,2–5,0×7,4	5,3–5,0 13,4×12,6	1,4–1,4
PK-12	1/1,5–1/1,3	1,4×2,1–1,2×1,8 3,5×5,2–3,1×4,6	4,6–4,6 11,7–11,6	1,7–1,8
PK-11 + PK-12	1,1–1,2	0,88×1,3–0,81×1,2 2,2×3,3–2,1×3,1	4,5–4,5 11,5–11,5	2,1–2,2
PK-13	1,4–1,4	0,10×1,1–0,66×0,98 1,8×2,7–1,7×2,5	4,6–4,6 11,6–11,7	2,5–2,6
PK-11 + PK-13	1,7–1,8	0,54×0,81–0,52×0,77 1,4×2,1–1,3×2,0	4,8–4,8 12,1–12,2	3,0–3,1
PK-12 + PK-13	2,0–2,1	0,46×0,70–0,44×0,67 1,2×1,8–1,1×1,7	4,9–5,0 12,5–12,7	3,4–3,6

Nikkor 24mm f/2

Extension Tube	Reproduction Ratio	Subject Area	Film-Plane-to-Subject Distance	Exposure Factor
–	1/∞–1/8,7	∞×∞–8,2×12,3 ∞×∞–20,8×31,2	∞–11,9 ∞–30,2	1–1,1
PK-11	1/3,1–1/2,3	2,9×4,3–2,1×3,2 7,3×11,0–5,5×8,2	6,0–6,0 16,9×15,2	1,2–1,3
PK-12	1/1,7–1/1,5	1,7×2,5–1,4×2,1 4,2×6,3–3,5×5,3	5,6–5,4 14,2–13,8	1,4–1,6
PK-11 + PK-12	1/1,1–1,0	1,1×1,6–0,94×1,4 2,7×4,0–2,4×3,6	5,3–5,3 13,5–13,5	1,7–1,9
PK-13	1,1–1,2	0,84×1,3–0,77×1,2 2,1×3,2–1,9×2,9	5,3–5,3 13,5–13,6	1,9–2,1
PK-11 + PK-13	1,4–1,6	0,65×0,98–0,61×0,91 1,7×2,5–1,5×2,3	5,4–5,5 13,8–14,0	2,3–2,4
PK-12 + PK-13	1,7–1,8	0,56×0,84–0,53×0,79 1,4×2,1–1,3×2,0	5,6–5,6 14,2–14,3	2,5–2,7

Nikkor 24mm f/2.8

Extension Tube	Reproduction Ratio	Subject Area	Film-Plane-to-Subject Distance	Exposure Factor
–	1/∞–1/8,8	∞×∞–8,4×12,5 ∞×∞–21,2×31,8	∞–11,8 ∞–30,0	1–1,1
PK-11	1/3,0–1/2,3	2,9×4,3–2,1×3,2 7,3×11,0–5,4×8,2	6,5–5,8 16,4×14,8	1,3–1,4
PK-12	1/1,7–1/1,5	1,6×2,5–1,4×2,1 4,2×6,3–3,5×5,2	5,4–5,3 13,8–13,4	1,5–1,7
PK-11 + PK-12	1/1,1–1,0	1,0×1,6–0,93×1,4 2,7×4,0–2,4×3,5	5,2–5,1 13,1–13,1	1,9–2,0
PK-13	1,1–1,2	0,84×1,3–0,76×1,1 2,1×3,2–1,9×2,9	5,2–5,2 13,1–13,2	2,2–2,3
PK-11 + PK-13	1,5–1,6	0,65×0,97–0,6×0,9 1,6×2,5–1,5×2,3	5,3–5,3 13,4–13,6	2,6–2,8
PK-12 + PK-13	1,7–1,8	0,56×0,83–0,52×0,78 1,4×2,1–1,3×2,0	5,4–5,5 13,8–14,0	2,9–3,1
PK-11 + PK-12 + PK-13	2.0–2.1	0,4×0,70–0,44×0,66 1,2×1,8–1,1×1,7	5,6–5,7	3,4–3,6

Nikkor 28mm f/2, 28mm f/2.8, 28mm f/3.5

Extension Tube	Reproduction Ratio	Subject Area	Film-Plane-to-Subject Distance	Exposure Factor
–	1/∞–1/7	∞×∞–6,6×9,9 ∞×∞–16,8×25,2	∞–11,9 ∞–30,1	1–1,1
PK-11	1/3,6–1/2,4	3,4×5,1–2,2×3,4 8,6×12,9–5,7×8,5	8,2–7,0 20,7×17,7	1,2–1,4
PK-12	1/2,1–1/1,6	1,9×2,9–1,5×2,3 4,9×7,4–3,8×5,7	6,7–6,3 16,9–16,0	1,5–1,6
PK-11 + PK-12	1/1,3–1/1,1	1,2×1,9–1,0×1,6 3,1×4,7–2,6×4,0	6,1–6,1 15,6–15,4	1,7–1,9
PK-13	1,0–1,1	0,99×1,5–0,86×1,3 2,5×3,8–2,2×3,3	6,1–6,1 15,4–15,4	2,0–2,1
PK-11 + PK-13	1,2–1,4	0,76×1,2–0,68×1,0 1,9×2,9–1,7×2,6	6,1–6,2 15,5–15,7	2,3–2,5
PK-12 + PK-13	1,5–1,6	0,65×0,98–0,59×0,89 1,7×2,5–1,5×2,3	6,2–6,3 15,8–16,0	2,6–2,8
PK-11 + PK-12 + PK-13	1.7–1.9	0,55×0,82–0,51×0,76 1,4×2,1–1,3×1,9	6,4–6,5 16,3–16,5	3,0–3,2

Nikkor 35mm f/1.4, 35mm f/2, 35mm f/2.8

Extension Tube	Reproduction Ratio	Subject Area	Film-Plane-to-Subject Distance	Exposure Factor
–	1/∞–1/5,5	∞×∞–5,2×7,9 ∞×∞–13,3×19,9	∞–11,8 ∞–29,9	1–1,3
PK-11	1/4,5–1/2,5	4,3×6,4–2,4×3,5 10,8×16,2–6,0×8,9	10,4–7,8 26,3×19,7	1,3–1,7
PK-12	1/2,6–1/1,8	2,4×3,6–1,7×2,5 6,2×9,3–4,2×6,3	7,9–7,0 20,0–17,7	1,6–2,0
PK-11 + PK-12	1/1,6–1/1,3	1,6×2,3–1,2×1,8 3,9×5,9–3,0×4,5	6,9–6,6 17,4–16,7	2,1–2,4
PK-13	1/1,3–1/1,1	1,2×1,9–1,0×1,5 3,1×4,7–2,5×3,8	6,6–6,5 16,8–16,5	2,4–2,8
PK-11 + PK-13	1,0–1,2	0,96×1,4–0,81×1,2 2,4×3,7–2,1×3,1	6,5–6,5 16,5–16,6	2,9–3,3
PK-12 + PK-13	1,2–1,3	0,82×1,2–0,71×1,1 2,1×3,1–1,8×2,7	6,5–6,6 16,6–16,8	3,3–3,8
PK-11 + PK-12 + PK-13	1,4–1,6	0,69×1,0–0,61×0,91 1,7×2,6–1,5×2,3	6,7–6,8 16,9–17,2	3,9–4,4

Nikkor 50mm f/1.2, 50mm f/1.4, 50mm f/1.8

Extension Tube	Reproduction Ratio	Subject Area	Film-Plane-to-Subject Distance	Exposure Factor
–	1/∞–1/6,7	∞×∞–6,3×9,5 ∞×∞–16,1×24,1	∞–17,7 ∞–44,9	1–1,3
PK-11	1/6,4–1/3,3	6,1×9,1–3,1×4,6 15,5×23,2–7,9×11,8	17,2–11,1 43,8×28,2	1,3–1,6
PK-12	1/3,7–1/2,4	3,5×5,2–2,3×3,4 8,8×13,3–5,7×8,6	11,8–9,5 30,0–24,0	1,5–1,9
PK-11 + PK-12	1/2,3–1/1,7	2,2×3,3–1,6×2,5 5,6×8,4–4,2×6,3	9,4–8,5 23,9–21,5	1,9–2,2
PK-13	1/1,9–1/1,5	1,8×2,7–1,4×2,1 4,5×6,8–3,5×5,3	8,7–8,1 22,0–20,7	2,1–2,5
PK-11 + PK-13	1/1,5–1/1,2	1,4×2,1–1,1×1,7 3,5×5,2–2,9×4,3	8,1–7,9 20,7–20,1	2,5–3,0
PK-12 + PK-13	1/1,2–1,0	1,2×1,8–0,99×1,5 3,0×4,5–2,5×3,8	7,9–7,9 20,2–19,9	2,9–3,3
PK-11 + PK-12 + PK-13	1,0–1,1	0,98×1,5–0,85×1,3 2,5×3,8–2,2×3,2	7,9–7,9 19,9–20,0	3,3–3,8

Micro-Nikkor 55mm f/2.8

Extension Tube	Reproduction Ratio	Subject Area	Film-Plane-to-Subject Distance	Exposure Factor
–	1/∞–1/1,9	∞×∞–1,8×2,7 ∞×∞–4,6×6,9	∞–8,8 ∞–25,0	1–1,1
PK-11	1/6,9–1,15	6,5×9,7–1,4×2,2 16,5×24,8–3,6×5,5	23,5–9,2 49,7–19,6	1,0–1,1
PK-12	1/3,9–1/1,3	3,1×4,7–1,2×1,9 9,4×14,1–3,7×5,6	13,4–9,0 34,1–22,9	1,0–1,2
PK-11 + PK-12	1/2,5–1/1,1	2,4×3,5–1,0×1,6 6,0×9,0–2,7×4,0	10,6–8,9 27,1–22,5	1,1–1,2
PK-13	1/2,0–1,0	1,9×2,8–0,94×1,4 4,8×7,2–2,4×3,6	9,8–8,8 24,9–22,5	1,1–1,2
PK-11 + PK-13	1/1,5–1,1	1,5×2,2–0,83×1,2 3,7×5,6–2,1×3,2	9,1–8,9 23,2–22,6	1,1–1,2
PK-12 + PK-13	1/1,3–1,2	1,3×1,9–0,76×1,1 3,2×4,8–1,9×2,9	8,9–9,0 22,5–22,7	1,2–1,3
PK-11 + PK-12 + PK-13	1/1,1–1,4	1,0×1,6–0,68×1,0 2,7×4,0–1,7×2,6	8,7–9,1 22,2–23,1	1,2–1,3

Nikkor 85mm f/2

Extension Tube	Reproduction Ratio	Subject Area	Film-Plane-to-Subject Distance	Exposure Factor
–	1/∞–1/8,1	∞×∞–7,6×11,4 ∞×∞–19,4×29,0	∞–33,5 ∞–85,0	1–1,3
PK-11	1/10,6–1/4,6	10,0×15,1–4,3×6,5 25,5×38,2–11,0×16,5	41,9–22,1 106–56,2	1,2–1,6
PK-12	1/6,1–1/3,5	5,7×8,6–3,3×4,9 14,6×21,9–8,3×12,5	26,9–18,6 68,4–47,3	1,4–1,8
PK-11 + PK-12	1/3,9–1/2,6	3,7×5,5–2,5×3,7 9,3×13,9–6,3×9,4	19,9–16,1 50,4–40,8	1,7–2,1
PK-13	1/3,1–1/2,2	2,9×4,4–2,1×3,2 7,4×11,1–5,4×8,0	17,5–15,0 44,4–38,2	1,9–2,3
PK-11 + PK-13	1/2,4–1/1,8	2,3×3,4–1,7×2,6 5,7×8,6–4,4×6,6	15,5–14,0 39,3–35,7	2,2–2,7
PK-12 + PK-13	1/2,0–1/1,6	1,9×2,9–1,5×2,3 4,9×7,4–3,9×5,9	14,5–13,6 36,9–34,5	2,5–2,9
PK-11 + PK-12 + PK-13	1/1,7–1/1,4	1,6×2,4–1,3×2,0 4,1×6,2–3,5×5,1	13,8–13,2 34,9–33,4	2,8–3,3

Nikkor 105mm f/2.5

Extension Tube	Reproduction Ratio	Subject Area	Film-Plane-to-Subject Distance	Exposure Factor
–	1/∞–1/8,3	∞×∞–7,9×11,9 ∞×∞–20,0×30,0	∞–42 ∞–107	1–1,3
PK-11	1/13,1–1/5,1	12,4×18,6–4,8×7,2 31,5×47,3–12,2×18,3	61,6–28,9 157×73,5	1,2–1,5
PK-12	1/7,5–1/3,9	7,1×10,6–3,7×5,6 18,0×27,0–9,5×14,2	38,6–24,2 98,1–62,0	1,3–1,6
PK-11 + PK-12	1/4,8–1/3,0	4,5×6,8–2,9×4,3 11,5×17,2–7,3×10,9	27,7–21,0 70,2–53,2	1,5–1,8
PK-13	1/3,8–1/2,6	3,6×5,4–2,5×3,7 9,2×13,7–6,3×9,4	23,9–19,5 60,8–49,4	1,6–2,0
PK-11 + PK-13	1/3,0–1/2,2	2,8×4,2–2,1×3,1 7,1×10,6–5,2×7,9	20,1–18,0 52,5–45,6	1,8–2,2
PK-12 + PK-13	1/2,5–1/1,9	2,4×3,6–1,8×2,8 6,1×9,1–4,7×7,0	19,1–17,2 48,6–43,7	2,0–2,4
PK-11 + PK-12 + PK-13	1/2.1–1/1.7	2,0×3,0–1,6×2,4 5,1×7,6–4,1×6,1	17,8–16,5 45,1–41,9	2,2–2,6

Micro-Nikkor 105mm f/2.8

Extension Tube	Reproduction Ratio	Subject Area	Film-Plane-to-Subject Distance	Exposure Factor
–	1/∞–1/2,0	∞×∞–1,9×2,8 ∞×∞–4,8×7,2	∞–18,6 ∞–47,1	1–2,2
PK-11	1/13,1–1/1,7	12,4×18,6–1,6×2,5 31,5×47,2–4,2×6,2	62,8–17,8 159–45,2	1,2–2,5
PK-12	1/7,5–1/1,6	7,1×10,6–1,5×2,2 18,0×27,0–3,8×5,7	28,8–17,0 101–44,1	1,3–2,7
PK-11 + PK-12	1/4,8–1/1,4	4,5×6,8–1,3×2,0 11,5×17,2–3,4×5,1	20,3–16,5 73,2–43,1	1,5–2,9
PK-13	1/3,8–1/1,3	3,6×5,4–1,2×1,9 9,2×13,7–3,2×4,7	25,1–16,8 63,7–42,7	1,6–3,1
PK-11 + PK-13	1/3,0–1/1,2	2,8×4,2–1,1×1,7 7,1×10,6–2,9×4,3	21,8–16,6 55,5–42,2	1,8–3,4
PK-12 + PK-13	1/2,5–1/1,1	2,4×3,6–1,1×1,6 6,1×9,1–2,7×4,0	20,3–16,5 51,6–42,0	1,9–3,6
PK-11 + PK-12 + PK-13	1/2.1–1.0	2,0×3,0–0,97×1,5 5,1×7,6–2,5×3,7	18,9–16,5 48,1–41,9	2,2–3,9

Nikkor 135mm f/2, 135mm f/2.8, 135mm f/3.5

Extension Tube	Reproduction Ratio	Subject Area	Film-Plane-to-Subject Distance	Exposure Factor
–	1/∞–1/7,5	∞×∞–7,1×10,6 ∞×∞–18,0×27,0	∞–51,3 ∞–130	1–1,5
PK-11	1/16,9–1/5,2	15,9×23,9–4,9×7,4 40,5×60,7–12,5×18,7	101–39,3 256–99,8	1,2–1,7
PK-12	1/9,6–1/4,2	9,1×13,7–4,0×6,0 23,1×34,7–10,1×15,2	62,5–34,4 159–87,3	1,4–1,9
PK-11 + PK-12	1/6,1–1/3,4	5,8×8,7–3,2×4,8 14,7×22,1–8,1×12,2	44,2–30,2 112–76,7	1,6–2,2
PK-13	1/4,9–1/3,0	4,6×7,0–2,8×4,2 11,8×17,7–7,1×10,7	37,9–28,2 96,2–71,7	1,8–2,4
PK-11 + PK-13	1/3,8–1/2,5	3,6×5,4–2,4×3,6 9,1×13,7–6,1×9,1	32,3–26,2 82,0–66,6	2,0–2,7
PK-12 + PK-13	1/3,3–1/2,3	3,1×4,6–2,1×3,2 7,8×11,7–5,4×8,2	29,6–25,1 75,2–63,7	2,2–2,9
PK-11 + PK-12 + PK-13	1/2,7–1/2,0	2,6×3,9–1,9×2,8 6,5×9,8–4,8×7,2	27,1–24,0 68,9–60,9	2,3–3,2

Nikkor 200mm f/4

Extension Tube	Reproduction Ratio	Subject Area	Film-Plane-to-Subject Distance	Exposure Factor
–	1/∞–1/7,4	∞×∞–7,0×10,5 ∞×∞–17,8×26,7	∞–78,6 ∞–200	1–1,7
PK-11	1/25,0–1/5,7	23,6×35,4–5,4×8,1 60,0×90,0–13,7×20,6	216–65,6 550×167	1,2–1,9
PK-12	1/14,3–1/4,9	13,5×20,2–4,6×6,9 34,3×51,4–11,7×7,6	132–59,2 336–150	1,3–2,1
PK-11 + PK-12	1/9,1–1/4,1	8,6×12,9–3,9×5,8 21,8×32,7–9,8×14,7	91,7–53,3 233–135	1,5–2,3
PK-13	1/7,3–1/3,7	6,9×10,3–3,5×5,2 17,5×26,2–8,8×13,2	77,6–50,3 197–128	1,7–2,5
PK-11 + PK-13	1/5,6–1/3,2	5,3×8,0–3,0×4,5 13,5×20,3–7,7×11,5	65,0–46,9 165–119	1,9–2,8
PK-12 + PK-13	1/4,8–1/2,9	4,6×6,8–2,8×4,1 11,6×17,3–7,0×10,5	58,8–44,9 149–114	2,1–3,0
PK-11 + PK-12 + PK-13	1/4.0–1/2.6	3,8×5,7–2,5×3,7 9,7×14,5–6,3×9,4	53,0–42,8 135–109	2,3–3,3

Nikkor 180mm f/2.8 ED

Extension Tube	Reproduction Ratio	Subject Area	Film-Plane-to-Subject Distance	Exposure Factor
–	1/∞–1/8,2	∞×∞–7,8×11,7 ∞×∞–19,7×29,6	∞–72,1 ∞–183	1–1,4
PK-11	1/22,5–1/6,0	21,3×31,9–5,7×8,5 54,0×81,0–14,4×21,7	173–56,9 439×144	1,1–1,6
PK-12	1/12,9–1/5,0	12,2×18,2–4,7×7,1 30,9×46,3–12,0×18,1	105–50,0 266–127	1,3–1,7
PK-11 + PK-12	1/8,2–1/4,1	7,7×11,6–3,9×5,8 19,6×29,5–9,8×14,8	71,9–43,8 183–111	1,4–1,9
PK-13	1/6,5–1/3,6	6,2×9,3–3,4×5,2 15,7×23,6–8,7×13,1	60,5–40,8 154–104	1,6–2,1
PK-11 + PK-13	1/5,1–1/3,1	4,8×7,2–3,0×4,4 12,2×18,3–7,5×11,3	50,3–37,5 128–95,2	1,7–2,3
PK-12 + PK-13	1/4,3–1/2,8	4,1×6,2–2,7×4,0 10,4×15,6–6,8×10,2	45,4–35,6 115–90,5	1,9–2,5
PK-11 + PK-12 + PK-13	1/3,6–1/2,5	3,4×5,2–2,4×3,6 8,7×13,1–6,1×9,1	40,7–33,7 103–85,6	2,1–2,7

Micro-Nikkor 200mm f/4 IF

Extension Tube	Reproduction Ratio	Subject Area	Film-Plane-to-Subject Distance	Exposure Factor
–	1/∞–1/2,0	∞×∞–1,9×2,8 ∞×∞–4,8×7,2	∞–28,0 ∞–71,1	1–7,6
PK-11	1/25,0–1/1,8	23,6×35,4–1,7×2,6 60,0×90,0–4,3×6,5	212–27,2 538–69,0	1,1–8,6
PK-12	1/14,3–1/1,7	13,5×20,2–1,6×2,4 34,3×51,4–4,0×6,1	128–26,7 325–67,8	1,3–9,5
PK-11 + PK-12	1/9,1–1/1,5	8,6×12,9–1,5×2,2 21,8×32,7–3,7×5,6	87,2–26,2 222–66,5	1,4–10,6
PK-13	1/7,3–1/1,5	6,9×10,3–1,4×2,1 17,5×26,2–3,5×5,3	73,1–25,9 186–65,8	1,5–11,5
PK-11 + PK-13	1/5,6–1/1,4	5,3×8,0–1,3×1,9 13,5×20,3–3,3×4,9	60,5–25,6 154–65,1	1,7–12,8
PK-12 + PK-13	1/4,8–1/1,3	4,6×6,8–1,2×1,8 11,6×17,3–3,1×4,6	54,5–25,4 138–65,6	1,8–13,8
PK-11 + PK-12 + PK-13	1/4,0–1/1,2	3,8×5,7–1,1×1,7 9,7×14,5–2,9×4,3	48,5×25,3 123×64,2	2,0–15,2

Nikkor ED 300mm f/4.5, Nikkor 300mm f/4.5

Extension Tube	Reproduction Ratio	Subject Area	Film-Plane-to-Subject Distance	Exposure Factor
–	1/∞–1/10,3	∞×∞–9,8×14,7 ∞×∞–24,8×37,2	∞–156 ∞–396	1–1,5
PK-11	1/37,5–1/8,1	35,4×53,2–7,7×11,5 90,0×135–19,5×29,2	476–130 1210–330	1,1–1,7
PK-12	1/21,4–1/7,0	20,3×30,4–6,6×9,9 51,4×77,1–16,7×25,1	286–117 727–297	1,2–1,8
PK-11 + PK-12	1/13,6–1/5,9	12,9×19,3–5,6×8,3 32,7×49,1–14,1×21,2	195–104 494–265	1,4–2,0
PK-13	1/10,9–1/5,3	10,3×15,5–5,0×7,5 26,2×39,3–12,7×19,1	163–97,7 413–248	1,5–2,1
PK-11 + PK-13	1/8,5–1/4,7	8,0×12,0–4,4×6,6 20,3×30,4–11,2×16,7	134–90,2 340–229	1,7–2,3
PK-12 + PK-13	1/7,2–1/4,3	6,8×10,3–4,0×6,0 17,3×26,0–10,2×15,3	120–85,8 304–218	1,8–2,5
PK-11 + PK-12 + PK-13	1/6,1–1/3,8	5,7×8,6–3,6×5,4 14,5×21,8–9,2×13,8	106–80,9 270–206	2,0–2,7

Nikkor NOCT. 58mm f/1.2

Photographic Ranges with Close-up Attachments

(in.)

	Close-up attachment	Lens in normal position			Lens in reverse position		
		Repro. ratio	Subject field	Focused distance	Repro. ratio	Subject field	Focused distance
	E2 Ring	1/4.1–1/2.6	3.9 x 5.9–2.4 x 3.6	14.0–10.7			
*	K Ring Set	1/10–1/1.1	9.4 x 14.2–0.99 x 1.5	27.1–8.6			
**	PK-Series Rings	1/7.2–1.0	6.9 x 10.3–0.94 x 1.4	20.9–8.6			
	Bellows PB-4, PB-5	1/1.3–3.2	1.3 x 1.9–0.30 x 0.44	8.8–12.0	1.6–4.0	0.61 x 0.91–0.24 x 0.35	9.0–13.7
***	Slide-Copying Adapter PS-4, PS-5	1/1.3–2.0	1.3 x 1.9–0.48 x 0.72	8.8–9.7	1.6–4.0	0.61 x 0.91–0.24 x 0.35	9.0–13.7
	Close-Up Lens No. 0	1/24.3–1/5.3	23.0 x 34.5–5.0 x 7.5	59.7–16.4			
	Close-Up Lens No. 1	1/11.6–1/4.3	11.0 x 16.4–4.0 x 6.1	30.8–14.3			
	Close-Up Lens No. 2	1/5.8–1/3.1	5.5 x 8.3–3.0 x 4.5	17.6–11.7			
****	Repro-Copy Outfit PF-2, PF-3	1/13–1/6.7	12.2 x 18.2–6.4 x 9.5	33.6–19.7			

Nikkor 85mm f/1.4

Photographic Ranges with Close-Up Attachments

(in.)

	Close-up attachment	Lens in normal position		
		Reproduction ratio	Subject field	Focused distance
	E2 Ring	1/6.1–1/3.5	5.7 x 8.6–3.3 x 4.9	27.0–19.0
*	K Ring Set	1/15–1/1.5	13.8 x 20.8–1.4 x 2.1	55.4–13.6
**	PK-Series Rings	1/11–1/1.4	10.0 x 15.1–1.4 x 2.0	42.0–13.4
	PN-Series Rings	1/1.6–1/1.4	1.5 x 2.3–1.3 x 1.9	13.6–13.3
	Bellows PB-4 or PB-5	1/2.0–2.2	1.9 x 2.8–0.43 x 0.65	14.4–15.0
	Bellows PB-6	1/1.8 x 2.4	1.7 x 2.5–0.39 x 0.58	14.0–15.7
	Extension Bellows PB-6E	1/1.8–5.2	1.7 x 2.5–0.18 x 0.28	14.0–24.0
***	Repro-Copy Outfit PF-2, PF-3 or PF-4	1/7.9–1/7.9	7.5 x 11.2–7.4 x 11.2	33.6–33.5

* The first values are for the K1 ring used alone and the second ones for all five rings used together.
** The first values are for the PK-11A or PK-1 ring used alone and the second ones for three rings (PK-11A ~ PK-13 or PK-1 ~ PK-3) used together.
*** The figures shown here represent the ranges obtained with the subject on the baseplate, using the lens without any close-up attachment.

Nikkor 105mm f/1.8

Photographic Range with Close-Up Attachments

(in.)

	Close-up attachment	Lens in normal position		
		Reproduction ratio	Subject field	Focused distance
	E2 Ring	1/7.5–1/3.8	7.1 x 10.6–3.6 x 5.4	39.0–24.1
*	K Ring Set	1/18–1/1.7	17.1 x 25.7–1.6 x 2.5	82.5–17.0
**	PK-Series Rings	1/13–1/1.7	12.4 x 18.6–1.6 x 2.4	62.0–16.7
	PN-Series Rings	1/2–1/1.6	1.9 x 2.8–1.5 x 2.2	17.7–16.6
	Bellows PB-4 or PB-5	1/2.4–1.8	2.3 x 3.5–0.54 x 0.80	19.2–17.0
	Bellows PB-6	1/2.2–2.0	2.1 x 3.1–0.48 x 0.72	18.3–17.7
	Extension Bellows PB-6E	1/2.2–4.2	2.1 x 3.1–0.23 x 0.34	18.3–25.6

* The first values are for the K1 ring used alone and the second ones for all five rings used together.
** The first values are for the PK-11A or PK-1 ring used alone and the second ones for three rings (PK-11A ~ PK-13 or PK-1 ~ PK-3) used together.

General Camera Accessories

Filter Selector Chart

Film	Filter Type		Description	Filter Factor		Product number (indicated in boxes below)								
				Daylight	Artificial light	Threaded mounting (By Filter Diameter)								Bayonet mounting
						39mm	46mm	52mm	62mm	72mm	95mm	122mm	160mm	
All	Skylight		L1BC	1		2238		2402	2371	2413				2366
	Ultraviolet		L37	1			2403							
			L37C	1		2237		2399	2372	2415	2494	2440	2441	
B/W	Yellow	Light	Y44	1,5	1			2295						
		Medium	Y48	1,7	1,2	2248		2229	2373	2270	2284	2280		2367
		Dark	Y52	2	1,4	2251		2296						
	Orange		O56	3,5	2	2253		2231	2374	2274	2274	2281		2363
	Red		R60	6	5	2259		2249	2375	2273	2286	2282		2368
	Green	Light	X0	2	1,7			2297						
		Dark	X1	5	3,5			2230						
All	Polarizing		Polar	2–4	2–4			2250	2376	2300				
	Neutral		ND4	4		2258		2243		2410				
			ND8	8		2319		2244						
			ND400	400				2409						
Color	Amber	Light	A2	1,2		2239		2266	2430	2416				2364
		Dark	A12	2		2256		2264	2431					
	Blue	Light	B2	1,2		2240		2235	2432	2417				2365
		Medium	B8	1,6		2241		2267						
		Dark	B12	2,2		2242		2268	2433					
All	Soft Focus No. 1							2407	2434	2418				
	Soft Focus No. 2							2408	2435	2419				

Filter Size	
39mm	500/8, 1000/11, 300/2.8 IF-ED, 400/3.5 IF-ED, 600/4 IF-ED, 600/5.6 IF-ED, 800/8 IF-ED, 1200/11 IF-ED
46mm	L35AF (ONE-TOUCH)
52mm	20/3.5, 24/2, 24/2.8, 28/2, 28/2.8, 28/3.5, 35/1.4, 35/2, 35/2.8, 50/1.2, 50/1.4, 50/1.8, 85/2, 105/2.5, 135/3.5, 200/4, 400/2.8 IF-ED, 35–70/3.3–4.5, 35–105/3.5–4.5, Micro Nikkor 55/2.8, 105/2.8, 105/4, 200/4, Noct 55/1.2, 35/2.8 PC, Series E: 28/2.8 E, 35/2.5 E, 50/1.8 E, 100/2.8 E, 135/2.8 E, 36–72/3.5 E, 75–150/3.5 E, Autofocus: AF 80/2.8, AF 24/2.8, AF 28/2.8, AF 35/2, AF 50/1.4, AF 50/1.8, AF Zoom 35–70/3.3–4.5, AF Zoom 35–105/3.5–4.5
62mm	20/2.8, 105/1.8, 35–70/3.5, 35–135/3.5–4.5, 50–135/3.5, 80–200/4, 100–300/5.6, Series E: 70–210/4, Autofocus: AF 200/3.5 IF-ED, AF 20/2.8, AF 85/1.8, AF Micro 55/2.8, AF Micro 60/2.8, AF Zoom 24–50/3.3–4.5, AF Zoom 28–85/3.5–4.5, AF Zoom 35–70/2.8, AF Zoom 35–135/3.5–4.5, AF Zoom 70–210/4, AF Zoom 70–210/4–5.6, AF Zoom 75–300/4.5–5.6
72mm	28/3.5 PC, 18/3.5, 135/2, 180/2.8 ED, 300/4.5, 300/4.5 IF-ED, 400/5.6 IF-ED, Zoom 25–50/4
77mm	AF Zoom 80–200/2.8
82mm	AF 300/4 ED
95mm	Zoom 50–300/4.5 ED, 800–200/2.8 ED, 180–600/8 ED
122mm	200/2 IF-ED, 400/3.5 IF-ED, 600/5.6 IF-ED, 800/8 IF-ED, 1200/11 IF-ED, Zoom: 200–400/4 ED
160mm	600/4 IF-ED
Bayonet	13/5.6, 15/3.5, 16/2.8

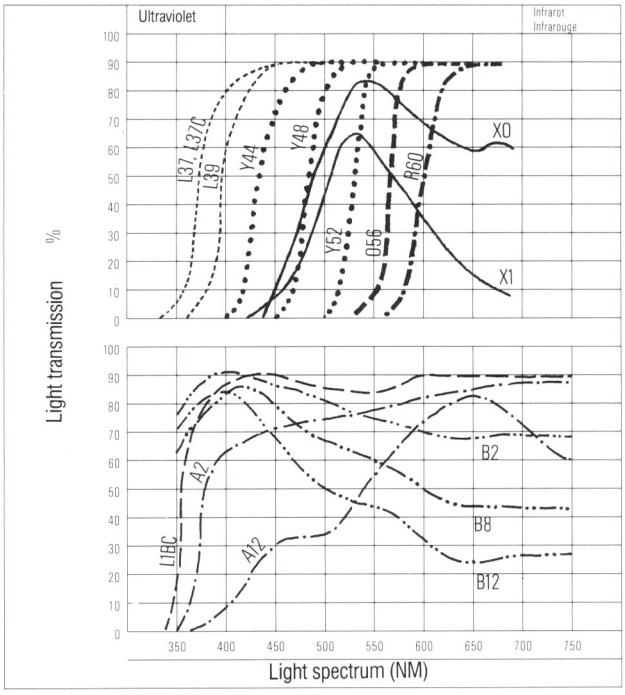

Filters for Black-and-White Film

The spectral sensitivity of black-and-white films differs from that of the human eye. For example, these films are much more sensitive to blue and to the invisible ultraviolet range. It is for this reason that blue sky appears light in a black-and-white print. On the other hand, yellow shades are reproduced darker than we normally perceive them. This helps to explain why many black-and-white photographs shot without filtration are lacking in contrast.

Filters for Color Film

Nikon filters for color film allow the photographer to balance and/or correct the available lighting to meet the needs of the film in use; color imbalance occurs whenever the color temperature of the light does not correspond to the film sensitization. Daylight film, for example, is calibrated for correct color reproduction with illumination having a color temperature of 5500°K; this corresponds to sunlight illumination in clear weather at about midday. If the ambient illumination differs from this, deviations in color reproduction will occur. Such deviations can be substantially compensated by using Nikon filters.

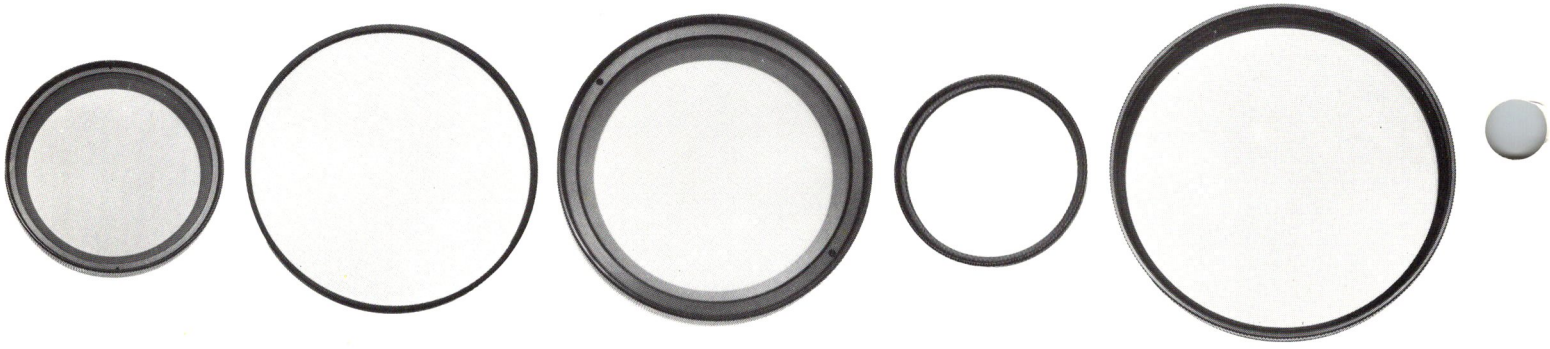

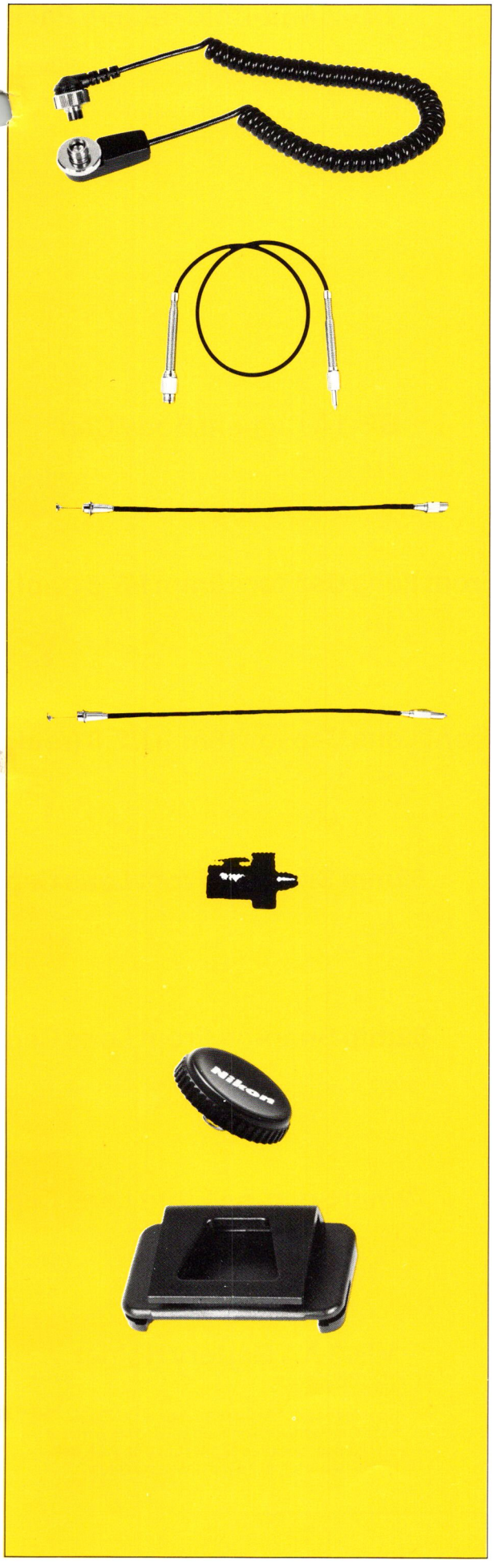

MC-3A Coiled Cord for Pistol Grip

Product number: 4582

Application: Provides for triggering of motor drive equipped camera from Pistol Grip Model II; Usable with MD -1/2/3/4/12/15 and N2000/N2020 cameras

AR-6 Cable Release for Pistol Grip

Product number: 667

Application: Provides for triggering of camera from Pistol Grip Model II; fitted with ISO-type tappered thread for connection to F3/FA/FE2/FM2/FG/FG-20/EM cameras

AR-2 Cable Release

Product number: 660

Application: Provides for vibration-free triggering of shutter release button; fitted with Nikon-type thread connection for operation with F/F2/FE/FM

AR-3 Cable Release

Product number: 664

Application: Provides for vibration-free triggering of shutter release button; fitted with ISO-type tappered thread for connection to F3/FA/FE2/FM2/FG/FG-20/EM cameras

AR-8 Cable Release Adapter

Product number: 669

Application: Adapts cable release connectors fitted with the Nikon-type mount for operation with cameras having ISO-type tappered thread; for use with AR-2/4 release

AR-9 Soft Shutter Release

Product number: 4417

Application: Soft shutter release for mounting on shutter buttons fitted with ISO-type tappered thread; for operation with F3/FA/FE2/FM2/FG/FG-20/EM cameras

DK-5 Eyepiece Shield

Product number: 2380

Application: Provides eyepiece shielding for unmanned photography with N4004/N2020/N2000

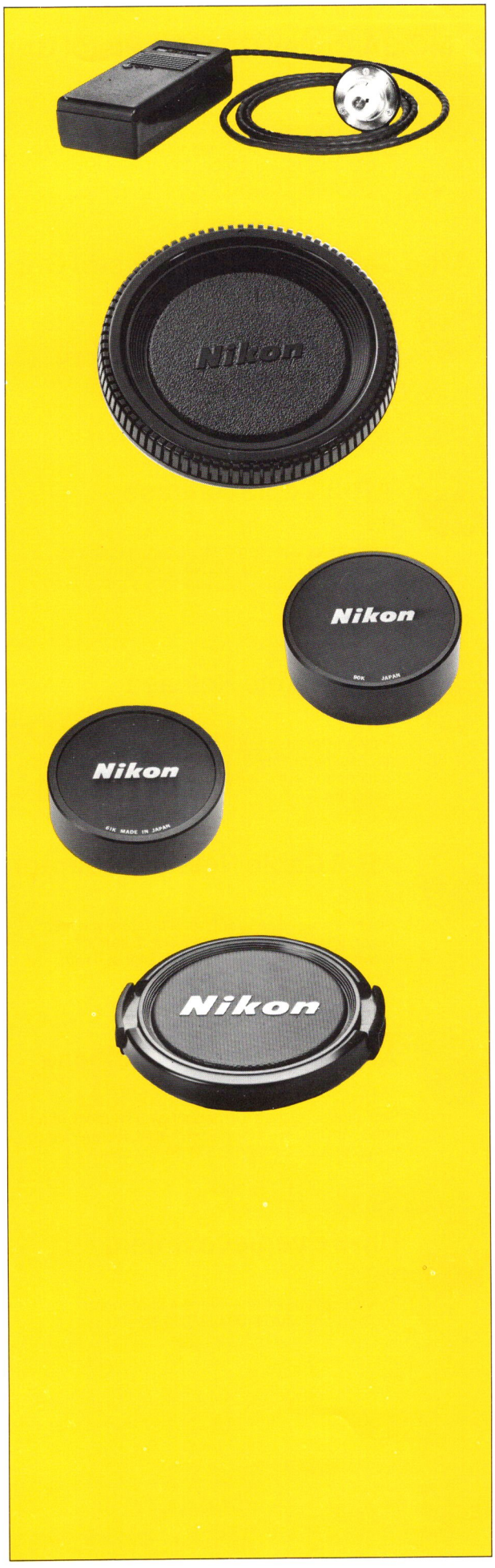

DB-2 Anti-Cold Battery Pack

Product number: 3062

Application: Provides cold-weather protection for camera batteries; for use with F3/FA/FE2/FM4/FG/FG-20/FM cameras

BF-1A Camera Body Cap

Product number: 612

Front Lens Cap for 15mm f/3.5 (repl.)

Product number: 584

Front Lens Cap for 16mm f/2.8 (repl.)

Product number: 597

52mm Snap-on Front Lens Cap

Product number: 581

62mm Snap-on Front Lens Cap

Product number: 600

72mm Snap-on Front Lens Cap

Product number: 601

MB-3 AA Battery Holder

(Not Pictured)

Product number: 4570

Application: Enables use of AA-type batteries with N2020/N2000 camera for extended service life with one set of batteries; operates as substitute for AAA Battery Holder MB-4 supplied with these cameras

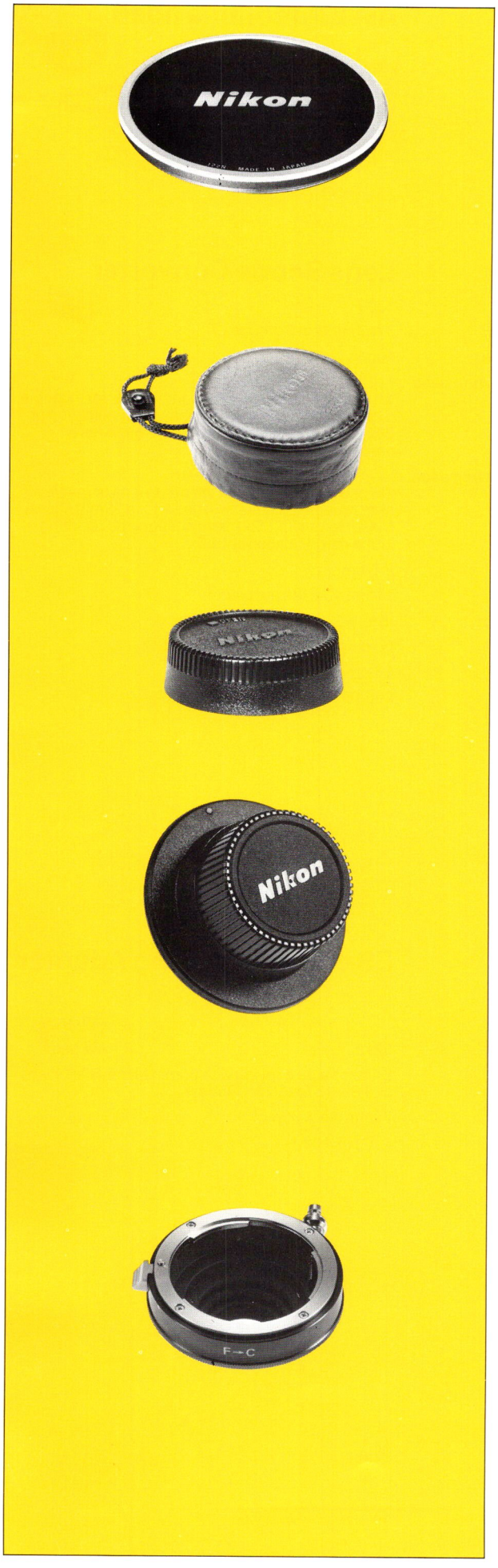

95mm Screw-on Front Lens Cap

Product number: 626

88mm Front Lens Cap for 500mm f/8 (repl.)

Product number: 620

122mm Screw-on Front Lens Cap

Product number: 621

Front Lens Cover for 300mm f/2.8 (repl.)

Product number: 570

LF-1 Rear Lens Cap

Product number: 607

BF-2 Front Mount Cap (repl.)

Product number: 598

Application: Protects the front optical elements of TC-2/300/301 teleconverters

F-to-C Lens Mounting Adapter

Product number: 2360

Application: Adapts Nikon F-bayonet mount lenses for use on video or cine cameras fitted with C-type threaded mount

AP-2 Panorama head

Nikon CONSUMER PRODUCTS DEALER

Product number:	2028
Application:	Provides for panoramic shooting with 28mm to 105mm lenses; fitted with built-in bubble level for precise tripod setup

Lens Scope Converter

Nikon Advanced Systems Dealer

Product number:	1399
Optical construction:	5 elements in 3 groups
Eyepiece focal length:	10mm
Total magnification when used as telescope:	1/10x the focal length of the prime lens; for example, a 200mm telephoto lens provides magnification of 20x, while a 70-210mm zoom lens provides a magnification is 7x-21x
Total magnification when used as a magnifier:	25x the magnification of the prime lens or macro attachment (e.g., bellows) used; for a 55mm Micro-Nikkor lens with 1/2x magnification, the resulting loupe magnification is 12.5x
Exit pupil:	2.5mm
Eyepoint:	11mm from the eyepiece
Eyepiece adjustment:	-5 to + 3 diopter
Eyecup:	Folding rubber eyecup provided
Dimensions:	65.4mm dia. x 56mm
Weight:	200g (7 oz.)

ES-1 Slide Copying Adapter

Nikon CONSUMER PRODUCTS DEALER

Product number:	3213
Application:	Enables side copying with 55mm Micro-Nikkor lens and PK-13 Extension Tube
Dimensions:	72mm dia. x 80mm
Weight:	150g (5.4 oz.)

Lens Hoods

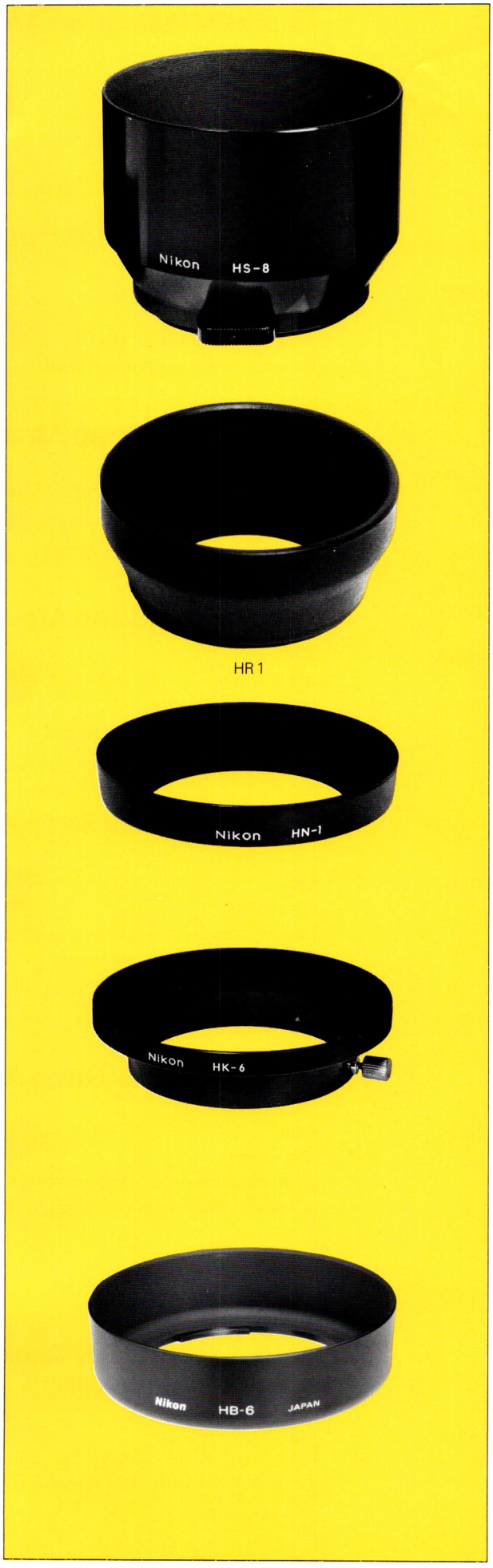

Lens	Lens Hood/Product Number
13mm f/5.6	Built-in
15mm f/3.5	Built-in
18mm f/3.5	**HK-9** (P/N 563)
20mm f/2.8	**HK-14** (P/N 559)
24mm f/2	**HK-2** (P/N 551)
24mm f/2.8 + AF	**HN-1** (P/N 508)
28mm f/2	**HN-1** (P/N 508)
28mm f/2.8 + AF	**HN-2** (P/N 509)
35mm f/1.4	**HN-3** (P/N 510)
35mm f/2 + AF	**HN-3** (P/N 510)
50mm f/1.2	**HR-2** (P/N 538) **HS-12** (P/N 547)
50mm f/1.4	**HR-1** (P/N 537) **HS-9** (P/N 543)
50mm f/1.4 AF	**HR-2** (P/N 538)
50mm f/1.8	**HR-4** (P/N 548)
50mm f/1.8 AF	**HR-2** (P/N 538)
80mm f/2.8 AF	**HS-7** (P/N 541)
85mm f/1.4	**HN-20** (P/N 562)
85mm f/1.8 AF	**HN-23** (P/N 565)
85mm f/2	**HS-10** (P/N 545)
105mm f/1.8	Built-in
105mm f/2.5	Built-in
135mm f/2	Built-in
135mm f/2.8	Built-in
180mm f/2.8N-AF	Built-in
200mm f/2N	Built-in + **HE-4** Extension (P/N 6A)
200mm f/3.5 AF-ED-IF	Built-in
200mm f/4	Built-in
300mm f/2 ED-IF	Built-in + **HE-1** Extension (P/N 605)
300mm f/2.8 AF-ED-IF	Built-in **HE-6** + Extension (P/N 614)
300mm f/4.5	Built-in
400mm f/2.8 ED-IF	Built-in + **HE-3** Extension
400mm f/3.5 ED-IF	Built-in
400mm f/5.6 ED-IF	Built-in
600mm f/4 ED-IF	Built-in + **HE-5** Extension
600mm f/5.6 ED-IF	Built-in + **HE-4** Extension (P/N 614)
800mm f/5.6 ED-IF	Built-in + **HE-3** Extension
500mm f/8N	**HN-27** (P/N 558)
1000mm f/11	Built-in
2000mm f/11	Built-in
28–85mm f/3.4–4.5	**HK-16** (P/N 4601)
28–85mm f/3.5–4.5 AF	**HB-1** (P/N 4602)
35–70mm f/3.5	**HN-22** (P/N 566)
35-70mm f/3.3-4.5 + AF	**HN-2** (P/N 509)
35–105mm f/3.5–4.5	**HK-11** (P/N 553)
35–105mm f/3.5–4.5 AF	**HB-2** (P/N 4603)
35–135mm f/3.5–4.5	**HN-22** (P/N 566)
35–135mm f/3.5–4.5 AF	**HB-1** (P/N 4602)
35–200mm f/3.5–4.5	**HK-15** (P/N 4600)
70–210mm f/4–5.6 AF	**HN-24** (P/N 567)
100–300mm f/5.6	**HN-24** (P/N 567)
80–200mm f/4	**HN-23** (P/N 565)
50–300mm f/4.5 ED	**HK-5** (P/N 554)
200–400mm f/4 ED	Built-in + **HE-2** Extension (P/N 606)
6mm f/2.8	Built-in
8mm f/2.8	Built-in
16mm f/2.8	Built-in
28mm f/3.5 PC	**HN-9** (P/N 523)
35mm f/2.8 PC	**HN-1** (P/N 508)
58mm f/1.2 Noct	**HR-2** (P/N 538) **HS-7** (P/N 541)
55mm f/2.8 Micro	**HN-3** (P/N 510)
105mm f/2.8 Micro	**HS-14** (P/N 555)
200mm f/4.0 Micro	Built-in
52mm Polar Filter	**HN-12** (P/N 518)
62mm Polar Filter	**HN-26** (P/N 568)
72mm Polar Filter	**HN-13** (P/N 539)
Gelatine Filter Holder AF-1	**HN-12** (P/N 518)

Lens	Metal Snap-on Mount/Product Number
58/1.2 Noct	**HS-7** (P/N 541)
50/1.4	**HS-9** (P/N 543)
85/2.0	**HS-10** (P/N 545)
50/1.2	**HS-12** (P/N 547)
105/2.8 Micro	**HS-14** (P/N 555)

Lens	Rubber Screw Mount/Product Number
50/1.4	**HR-1** (P/N 537)
50/1.2, 58/1.2 Noct	**HR-2** (P/N 538)
50/1.4 AF, 50/1.8 AF	
50/1.8 E, 50/1.8N	**HR-4** (P/N 548)

Lens	Metal Screw Mount/Product Number
24/2.8, 28/2	**HN-1** (P/N 508)
35/2.8 PC, 24/2.8 AF	
28/2.8, 28/2.8 AF	**HN-2** (P/N 509)
35-70/3.3-4.5 + AF	
35/1.4, 35/2 + AF, 35/2.8	**HN-3** (P/N 510)
55/2.8 Micro	
28/3.5 PC	**HN-9** (P/N 523)
52mm Polar Filter	**HN-12** (P/N 518)
72mm Polar Filter	**HN-13** (P/N 539)
85/1.4	**HN-20** (P/N 562)
35-70/3.5, 35-135/3.5-4.5	**HN-22** (P/N 566)
800–200 f/2.8 AF	**HN-28** (P/N 572)
80–200/4	**HN-23** (P/N 565)
70–210/4–5.6	**HN-24** (P/N 567)
100-300/5.6	
62mm Polar Filter	**HN-26** (P/N 568)
500/8N	**HN-27** (P/N 558)

Lens	Metal Slip-on Mount (Product Number)
24/2	**HK-2** (P/N 551)
50-300/4.5 ED	**HK-5** (P/N 554)
18/3.5	**HK-9** (P/N 563)
50-135/3.5	**HK-10** (P/N 544)
35-105/3.5-4.5	**HK-11** (P/N 553)
28-50/3.5	**HK-12** (P/N 556)
20/2.8	**HK-14** (P/N 559)
35-200/3.5-4.5	**HK-15** (P/N 4600)
28-85/3.5-4.5	**HK-16** (P/N 4601)

Lens	Metal Bayonet Mount/Product Number
28-85/3.5-4.5 AF	**HB-1** (P/N 4602)
35-70/2.8 AF	
35-135/3.5-4.5 AF	
24-50/3.3-4.5 AF	**HB-3** (P/N 4604)
35-105/3.5-4.5 AF	**HB-5** (P/N 4611) **NEW**
28-70/3.5-4.5 AF	**HB-6** (P/N 4612)

Lens	Extension/Product Number
300/2 ED-IF	**HE-1** (P/N 605)
200-400/4 ED	**HE-2** (P/N 606)
200/2N ED-IF	**HE-4** (P/N 614)
600/5.6N ED-IF	

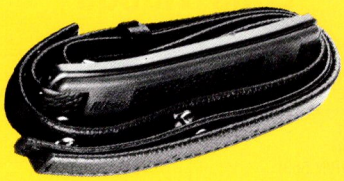

Leather Neck Strap AN-1

Product number: 635
Width: 10mm/25mm
Color: Black
Material: Leather with removeable rubber neck pad

N2000 Nylon Neck Strap

(not pictured)

Product number: 683
Width: 12mm/30mm
Color: Black with embroidered "N2000"
Material: Woven nylon fabric with non-slip pad

Nylon Neck Strap AN-4B

Product number: 639
Width: 12mm/25mm
Color: Black
Material: Woven nylon fabric with non-slip pad

Nylon Neck Strap AN-4Y

Product number: 638
Width: 12mm/25mm
Color: Yellow with black stripes
Material: Woven nylon fabric with non-slip pad

Nylon Wide Neck Strap AN-6Y

Product number: 4507
Width: 12mm/50mm
Color: Yellow with black stripes and embroidered "Nikon"
Material: Woven nylon fabric with non-slip pad

Nylon Wide Neck Strap AN-6W

Product number: 4508
Width: 12mm/50mm
Color: Wine with yellow stripes and embroidered "Nikon"
Material: Woven nylon fabric with non-slip pad

AH-4 SLR Leather Accessory Hand Grip for N8008

Product number 649
Application: Secures the N8008 comfortably in your hand for a firm grip. Particularly useful when using zoom and telephoto lenses

Nylon Wide Neck Strap AN-8 for Action-Touch (replacement)

Product number: 648
Width: 10mm/25mm
Color: Grey with embroidered "Nikon"
Material: Woven nylon fabric with non-slip pad

Neck Strap for One-Touch, Action-Touch, Tele-Touch

Product number: 647
Width: 7mm
Color: Black
Material: Woven nylon fabric

Eveready Camera Cases

CF-21 Eveready Camera Case

Product number: 4409

Storage for: Camera with most lenses from wideangle to short telephoto, plus 35-70/3.3-4.5 zoom lens

Finish: Wine leather with brown nylon fabric neck strap

CF-21A Front Flap for Eveready Case

Product number: 4410

Storage for: Camera with lens as big as 25-50/4 or 35-135/3.5-4.5 zoom lens; for use with CF-20/21/22/23D/24 case base sections

Finish: Wine leather

CF-22 Eveready Camera Case

Product number: 4422

Storage for: Camera with most lenses from wideangle to 85/2 telephoto

Finish: Wine leather with brown nylon fabric neck strap

CF-23D Case Base for Data Back

Product number: 4538

Storage for: Camera with Data Back MF-14; for use with CF-20/21/21A/22/24 case front flaps

Finish: Wine leather

CF-24 Eveready Camera Case

Product number: 4424

Storage for: Nikon F3AF with 80mm autofocus lens

Finish: Wine leather with brown nylon fabric neck strap

CF-30 Eveready Camera Case

Product name: 4436

Storage for: Camera with normal lens

Finish: Black leatherette with black Nylon Fabric Neck Strap AN-7

CF-30D Case Base for Data Back

Product number: 4439

Storage for: Camera with Data Back MF-16; for use with CF-30/31 case front flaps

Finish: Black leatherette

CF-31 Eveready Camera Case

Product number: 4438

Storage for: Camera with most lenses from wideangle to short telephoto, plus 35-70/3.3-4.5 zoom lens

Finish: Black leatherette with black Nylon Fabric Neck Strap AN-7

CF-28A Front Flap for Eveready Case

Product number: 4431

Storage for: Camera with lens as big as 25-50/4 or 35-135/3.5/-4.5 zoom lens; for use with CF-30/30D/31 case base sections

Finish: Black leatherette

CF-27 Eveready Camera Case

Product number: 4427
Storage for: Camera with normal lens
Finish: Black leatherette with black Nylon Fabric Neck Strap AN-7

CF-27D Case Base for Data Back

Product number: 4430
Storage for: Camera with Data Back MF-16; for use with CF-27/28/28A case front flaps
Finish: Black leatherette

CF-28 Eveready Camera Case

Product number: 4428
Storage for: Camera with most lenses from wideangle to short telephoto, plus 35-70/3.3-4.5 zoom lens
Finish: Black leatherette with black Nylon Fabric Neck Strap AN-7

CF-28A Front Flap for Eveready Case

Product number: 4431
Storage for: Camera with lens as big as 25-50/4 or 35-135/3.5-4.5 zoom lens; for use with CF-27/27D/28 case base sections
Finish: Black leatherette

CF-29 Eveready Camera Case

Product number: 4429
Storage for: Camera with Motor Drive MD-12 and most lenses from wide angle to short telephoto, plus 28-85/3.5-4.5 zoom lens
Finish: Black leatherette with black Nylon Fabric Neck Strap AN-7

CF-35 Eveready Camera Case

Product number: 4576
Storage for: Camera with most lenses from wideangle to short telephoto, plus 35-70/3.3-4.5 zoom lens
Finish: Black leatherette with black Nylon Fabric Neck Strap AN-7

CF-35D Case Base for Data Back

Product name: 4578
Storage for: Camera with Multi Data Back MF-19; for use with CF-35/36/36A case front flaps
Finish: Black leatherette

CF-36 Eveready Camera Case

Product number: 4577
Storage for: Camera with most lenses from wideangle to medium telephoto, plus 35-105/3.5-4.5 zoom lens
Finish: Black leatherette with black Nylon Fabric Neck Strap AN-7

CF-36A Front Flap for Eveready Case

Product number: 4579
Storage for: Camera with lens as big as 35-135/3.5-4.5 zoom lens; for use with CF-35/36 case base sections
Finish: Black leatherette

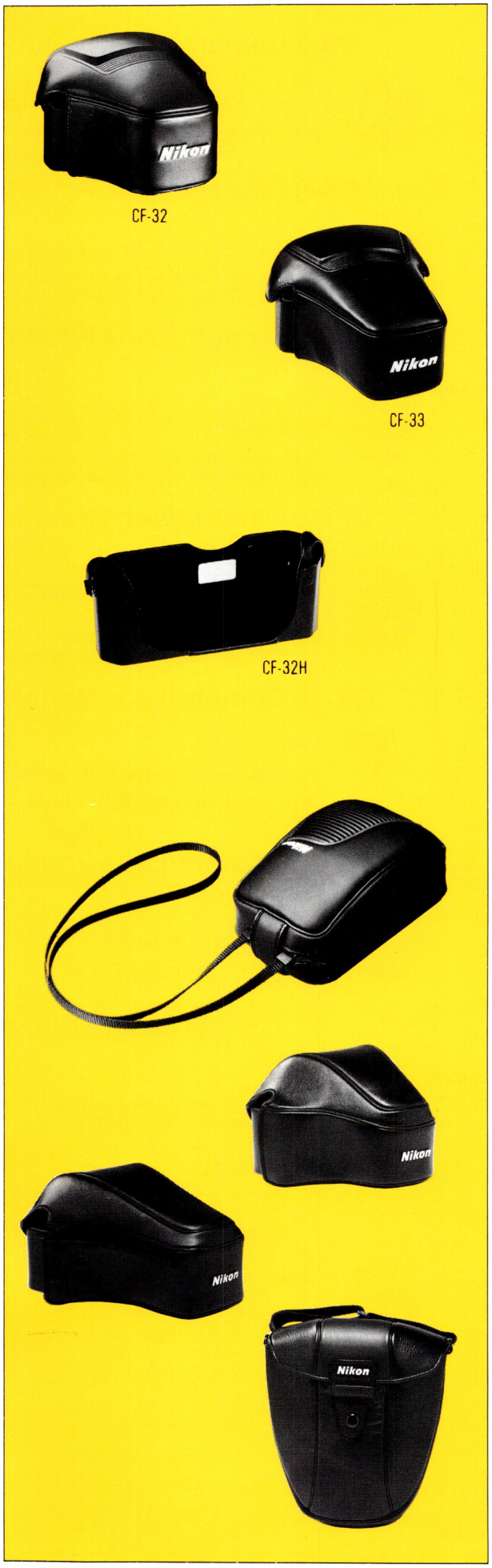

CF-32 Eveready Camera Case

Product number: 4432
Storage for: FG-20 with normal lens
Finish: Black leatherette with black Nylon Fabric Neck Strap AN-7

CF-33 Eveready Camera Case

Product number: 4433
Storage for: FG-20 with most lenses from wide angle to short telephoto, plus 35-70/3-4.5 zoom lens
Finish: Black leatherette with black Nylon Fabric Neck Strap AN-7

Camera Pouch Case for Tele-Touch Deluxe/ One-Touch/Fun-Touch

Product number: 690
Finish: Black leatherette

Camera Pouch Case with Strap for Action-Touch

Product number: 691
Finish: Black leatherette

CS-L35TW Semi-Soft Case for Tele-Touch

Product number: 4572
Finish: Black leatherette

CF-39 Eveready Camera Case

Product number: 4590
Storage for: N8008(s) with normal lens
Finish: Black leatherette

CF-40 Eveready Camera Case

Product number: 4591
Storage for: N8008(s) with most lenses from wideangle to short telephoto
Finish: Black leatherette

CF-43 Eveready Camera Case

Product number: 4595
Storage for: F4S with Data Back MF-22, MF-23
Finish: Black leatherette

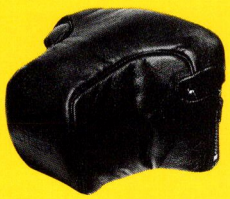

CS-7

CS-8

CS-9

CS-10

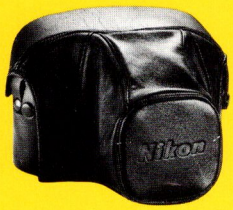

CS-15

CS-16

CS-13

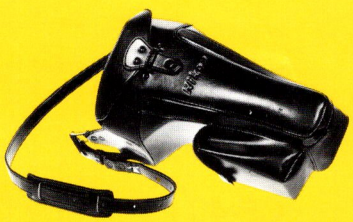

CS-34

CS-7 Camera/Lens Pouch Case

Product number: 422

Storage for: Camera (except F3-Series) with normal lens

Finish: Black leatherette, one-piece construction; case must be removed completely before shooting

CS-8 Camera/Lens Pouch Case

Product name: 425

Storage for: Camera (except F3AF) with normal lens

Finish: Black leatherette, one-piece construction, case must be removed completely before shooting

CS-9 Camera/Lens Pouch Case

Product number: 426

Storage for: Camera (except F3AF) with lens as big as 35-135/3.5-4.5 zoom lens

Finish: Black leatherette, one-piece construction; case must be removed completely before shooting

CF-10 Camera/Lens Pouch Case

Product number: 427

Storage for: Camera (except F3AF) with lens as big as 80-200/4 zoom lens

Finish: Black leatherette, one-piece construction; case must be removed completely before shooting

CS-15 Camera/Lens Pouch Case

Product number: 4414

Storage for: F3-series cameras (except F3AF) with normal l

Finish: Black leather, two-piece (flap and base) construction

CS-16 Camera/Lens Pouch Case

Product number: 4415

Storage for: FE/FM-series cameras with normal lens

Finish: Black leather, two-piece (flap and base) construction

CS-13 Camera Blimp Case

Product number: 4484

Storage for: Camera with motor drive and any lens mounted; case dampens camera and motor noise during shooting

Finish: Black leatherette

CF-34 Camera/Lens Utility Case

Product number: 4434

Storage for: Camera with lens as big as 100-300/5.6 zoom lens

Finish: Black leatherette in semi-rigid construction; belt or shoulder use possible

Dimensions: 320mm(L) x 180mm(W) x 130mm (D)

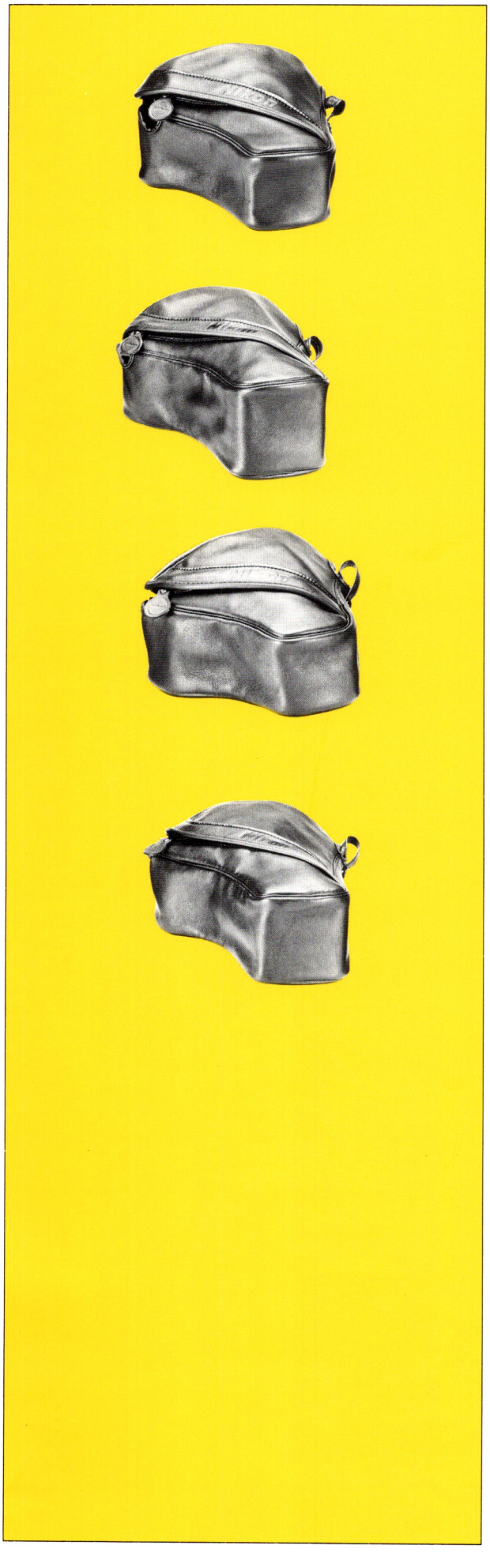

*CS-17 Soft Leather Case

Product number: 4136

Storage for: FM2, FE/FE2, FA and Nikkormats with lenses up to 35-70mm f/3.3-4.5

Finish: Black leather

*CS-18 Soft Leather Case

Product number: 4137

Storage for: FM2, FE/FE2, FA and Nikkormats with lenses up to 35-135mm

Finish: Black leather

*CS-19 Soft Leather Case

Product number: 4138

Storage for: F3HP, F3/T, F2, N8008(s), N6006, N4004s, N2020, N2000 with lenses up to 35-70mm f/3.3-4.5

Finish: Black leather

*CS-20 Soft Leather Case

Product number: 4139

Storage for: F3HP, F3/T, F2, N8008(s), N6006, N4004s, N2020, N2000 with lenses up to 35-135mm

Finish: Black leather

*Available beginning July 1991.

Compartment Case FB-8

Product number: 496

Storage for: One camera body with normal lens, one camera body without lens, and three bayonet mounts for one telephoto lens up to 300mm and two addition lenses up to 85mm; pocket for incidentals

Finish: Black leatherette

Weight: 2 kg (4 lbs. 6 oz.)

Dimensions: 280mm(W) x 210mm(H) x 150mm(D) (11" x 8.3" x 5.9")

Compartment Case FB-11A

Product number: 500

Storage for: Large quantity of cameras, lenses, and accessories; lower level storage area provided, supplied with Filter Case CA-1

Finish: Brown leather

Weight: 3.2 kg (7 lbs.)

Dimensions: 355mm(W) x 255mm(H) x 200(D) (14" x 10" x 7.9")

Compartment Case FB-14

Product number: 503

Storage for: One camera body with normal lens and two additional lenses, one up to 300mm; supplied with interior dividers

Finish: Black leather

Weight: 0.9 kg (2 lbs.)

Dimensions: 280mm(W) x 230mm(H) x 110mm(D) (11" x 9.1" x 4.3")

Compartment Case FB-15

Product number: 477

Storage for: One camera body with motor and lens up to 135mm, one camera body with lens up 135mm, and several addition lenses (or accessories); lower level storage area provide; supplied with pouch for bulky items

Finish: Brown leather

Weight: 2.1 kg (4 lbs. 10 oz.)

Dimensions: 305mm(W) x 210mm(H) x 175mm(D) (12" x 8.3" x 6.9")

FB-16 Compartment Case

Product number: 492

Storage for: One camera body with motor and normal lens, one additional lens to 200mm, and one speedlight

Finish: Brown leatherette with adjustable strap

Weight: 0.9 kg (2 lbs.)

Dimensions: 190mm(W) x 175mm(H) x 150mm(D) (7.5" x 6.9" x 5.9")

FB-17 Compartment Case

Product number: 4498

Storage for: One camera body with normal lens, two additional lenses up to 135mm and one compact speedlight; supplied with interior dividers

Finish: Dark brown leatherette with adjustable strap

Weight: 0.9 kg (2 lbs.)

Dimensions: 280mm(W) x 155mm(H) x 110mm(D) (11" x 6.1" x 4.3")

SLR Pro Case

Nikon CONSUMER PRODUCTS DEALER

Product number:	***698***
Storage for:	Up to two SLR bodies, six lenses, electronic flash, filters, cords and accessories. Each case can be customized with velcro dividers provided. Front pocket holds personal items.
Finish:	All black heavy duty nylon with extra wide, padded, adjustable strap.
Weight:	1.36 kg (2 lbs. 8 oz.)
Dimensions:	9.5(H) x 18(W) x 8″(D)

Battery Selector Chart

ITEM	QUANTITY	TYPE
SLR Cameras		
F4S	6	1.5v AA Alkaline
F3HP, F3, F2, F2S, F2SB, F2A, F2AS Photomics, FM2, FE2, FM, FE, FG, FG-20, EM, Nikonos-V	2	1.5v Silver Oxide or one 3V Lithium
N8008	4	1.5v AA Alkaline (MS-7)
N4004S, N4004	4	AA Alkaline
N2000, N2020	4 4	AA Alkaline (MB-4) or AA Alkaline (MB-3)
Nikonos IV-A	2	1.5V Silver Oxide
Nikkormat FT2, FT3	2	1.5V Silver Oxide
Nikkormat FT, FTN	1	1.3V Mercury
EL, ELW, EL2	1	6V Silver Oxide
Autofocus Compacts		
Zoom-Touch 500, Tele-Touch 300	1	6V Lithium
Tele-Touch Deluxe	1	6V Lithium (DL-223A)
One-Touch 100	1	3V Lithium
Action-Touch, L35AF & LI35AF, One-Touch, Fun-Touch, Tele-Touch	2	AA Alkaline
Super 5X, 8X (Motor) (Meter)	4 2	AA Alkaline 1.3V Mercury
R-8 Super Zoom (Motor) (Meter)	6 2	AA Alkaline 1.3V Mercury
R-10 Super Zoom (Motor)	6	AA Alkaline
DL-1 Photomic Illuminator	1	1.3V Mercury
DB-2 Anti-Cold Battery Pack	2	AA Alkaline
DB-3 External Battery Pack f/MF-12	2	AAA Alkaline
Motor Drives		
F36 Motor (Cordless)	8	AA Alkaline
F250, F36 Motors with Standard Pack	8	C Alkaline
F3 MD-4	8	AA Alkaline or MN-2 NiCad (#125)
F2MB-1 Battery Pack	10	AA Alkaline or MN-1 NiCad Battery Pair (#38)
F2 MB-2 Battery Pack	8	AA Alkaline
MD-11 & MD-12 Motor	8	AA Alkaline
MD-E	6	AAA Alkaline
MD-14 & MD-15 Motor	8	AA Alkaline
Auto Winder		
Auto-Winder AW-1	6	AA Alkaline
Remote Controls		
Modulite Transmitter	1	9V Standard Battery
Modulite Receiver	4	AA Alkaline
Wireless Remote Control Transmitter	8	AA Alkaline
Wireless Remote Control Receiver	8	AA Alkaline
Intervalometer MT-1	4	AA Alkaline
Intervalometer MT-2	4	AA Alkaline
Data Backs		
MF-23	2	CR2050
MF-22	1	CR2050
MF-21	2	CR2050
MF-20	1	CR2050
MF-19	2	1.5V Silver Oxide
MF-18	2	1.5V Silver Oxide
MF-17	4	AA Alkaline
MF-16	2	1.5V Silver Oxide
MF-14	2	1.5V Silver Oxide

ITEM	QUANTITY	TYPE
EE Control		
EE Aperture Control	1	NiCad Battery DN-1 (#48)
DB-1 Battery Pack f/EE	4	C Cell
Flash Units		
120mm Medical Nikkor Battery Pack (LD-2), SB-21 Macro Speedlight External Power Pack)	8	AA Alkaline
200mm Medical Nikkor I Battery Pack	4 1	D Alkaline 240V Battery
200mm Medical Nikkor II Battery Pack	8	D Alkaline
Battery Pack f/SB-1	6	D Alkaline
High Voltage Pack f/SB-1	1	510V Battery
Repeating Flash Battery Pack (f/SB-6)	8	NiCad Battery SN-3 (#294)
BC-7 Flash	1	15V Battery
SB-2 Speedlight	4	AA Alkaline
SB-3 Speedlight	4	AA Alkaline
SB-4 Speedlight	2	AA Alkaline
SB-5 Speedlight	1	NiCad SN-2 (#309)
SB-5 Battery Pack, SD4	1 or 2	480V Battery 240V Batteries
SB-7E Speedlight	4	AA Alkaline
SB-8E Speedlight	4	AA Alkaline
SB-9 Speedlight	2	AA Alkaline
SB-10 Speedlight	4	AA Alkaline
SB-11 Speedlight	8	AA Alkaline
SB-12 Speedlight	4	AA Alkaline
SB-14, 140 Battery Pack, SD-7	6	C Cell
SB-15, 17	4	AA Alkaline
SB-16A, 16B	4	AA Alkaline
SB-19	4	AA Alkaline
SB-20, 22 Speedlight	4	AA Alkaline
SB-23 Speedlight	4	AA Alkaline
SB-E Speedlight	4	AAA Alkaline
SB-21A, SB-21B Macro Speedlight	4	AA Alkaline
SB-24 AF TTL Speedlight	4	AA Alkaline
DC Power Supply For Ring Lights SR-2, SM-2	8	D Alkaline

Note: AA Zinc Carbon Batteries (1.5V each) may be used instead of AA Alkaline in the above listing.

Note: While both Silver Oxide and lithium cells will operate some camera models, there is some difference in the performance characteristics of thes two battery types. We suggest that you check with your battery supplier to get specific information about the battery you intend to use.

Specifications are subject to change without notice.

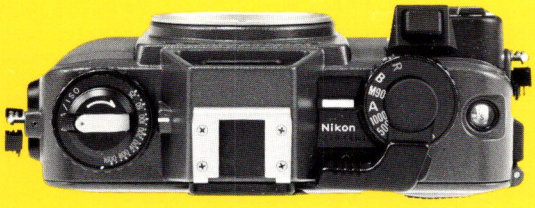

Nikonos-V

Product number:	10070 (orange) 10071 (green)
Type of camera:	Electronically-controlled 35mm underwater and all-weather camera with focal plane shutter
Construction:	Body made of cast aluminum alloy partially covered with rubber; water-proof sealing via O-ring
Operation range:	Can be used down to a pressure of approximately 6kg/cm3 (depth of approx. 50m or 160 ft.)
Picture format:	24mm x 36mm (standard 35mm format)
Lens mount:	Nikonos spring-loaded bayonet
Lenses:	W-Nikkor 35mm f/2.5 as normal lens; 4 alternative lenses from super wideangle to short telephoto
Camera viewfinder:	Inverted-Galilean, Albada finder built into camera for use with standard 35mm lens; film frame marks show about 85% picture coverage at infinity; 0.55x magnification; 0.9 diopter; exit pupil lying well back permits viewing with eye up to 40mm away from finder; parallax correction marks provided; optical viewfinder or frame finders available as accessories for other Nikonos lenses
Camera viewfinder display:	LED shutter speed indicators; LED arrows (◄ ►) indicate overexposure and underexposure; lightening-bolt symbol provided as flash ready-light
Shutter:	Electronically-controlled, vertical travel metal focal plane shutter
Shutter speeds:	At "A" (Auto), electronically-controlled, stepless speeds from 1/30 sec. to 1/1000 sec.; at manually-selected setting (30-1000), quartz-controlled speeds from 1/30 sec. to 1/1000 sec., at "M90", mechanically controlled 1/90 sec. speed; at "B" (Bulb), mechanically controlled for long exposures; "R" setting provided for rewinding film
Shutter release:	Via button atop anatomically-shaped grip; gentle pressure on button switches metering system on; meter remains on for 16 sec. after finger is removed; shutter release lock incorporated
Exposure control:	Via selector dial which provided for both manual and automatic exposure control for general and flash photography
Exposure metering:	Through-the-lens (TTL), centerweighted metering with two silicon photodiodes (SPDs); one of the SPDs for TTL flash control with SB-102, SB-103 and other units
Metering range:	EV8 to EV19 at ASA/ISO 100 with f/2.8 lens (1/30 sec at f/2.8 to 1/1000 sec at f/22)
Film speed range:	ISO 25 to 1600

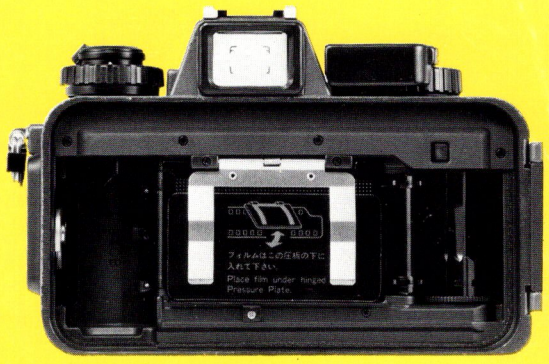

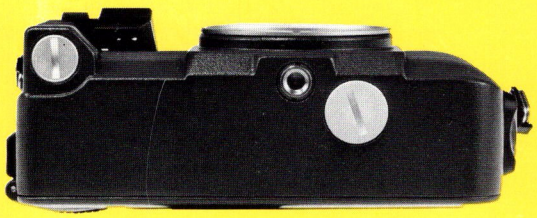

Accessory shoe:	Built into top of viewfinder
Flash synchronication:	X-synchronication only, via flash socket in camera base; synchronizes at 1/90 sec. or slower; Nikonos electronic flash unit SB-102 or SB-103 switches camera automatically to 1/90 sec. when shutter speed selector dial is at "A" or at manual speed of 1/125 sec. or higher; at manual speeds of 1/60 sec. or slower, shutter fires at speed set
Flash ready-light:	Lightening symbol in viewfinder lights up when SB-102, SB-103 or another flash unit has recycled; flashes to warn of full power output from flash which may result in insufficient subject illumination, incorrect setting of shutter speed selector dial or film speed setting higher than ISO 400
Film advance lever:	Wound in single stroke or series of strokes; 144° winding angle; hinged for compactness; when shutter speed selector dial is at "A", shutter releases at about 1/1500 sec. until film frame counter reaches frame one
Frame counter:	Additive type; resets automatically when camera back is opend
Film rewind:	Manually via film rewind crank after shutter speed selector dial has been set to "R"; shutter release button remains locked during rewinding
Camera back:	Hinged type with camera back locking pin; opened and locked via camera back lock/release latch and camera back release button
Pressure plate:	Hinged type, attached to camera body; locking catch provided
Tripod socket:	Incorporated in camera baseplate; 1/4-inch thread (JIS)
Power source:	Two 1.5v silver-oxide (button-cell) batteries or one 3V Lithium battery
Battery check:	Possible when shutter speed selector dial is at any setting except M90, B or R, and frame counter is at or beyond "I"; when shutter release button is depressed, viewfinder display lights up to confirm sufficient battery power; when batteries are exhausted, mechanical operation provided at either M90 or B settings
Dimensions:	146mm(W) x 99mm(H) x 58mm (D) (5.7″ x 3.9″ 2.3_0), body only
Weight:	700g (24.6 oz.), body only
Optional accessories:	Custom Shoulder Case O-ring Set with (Grease replacement)

UW-Nikkor 15mm f/2.8

This lens is intended exclusively for underwater photography

Product number:	10315
Focal length:	15mm
Maximum aperture:	f/2.8
Picture angle:	94° (underwater)
Optical construction:	12 elements in 9 groups (including front protective port glass)
Minimum focusing distance:	0.3m (1 ft.)
Aperture:	Manual aperture diaphragm
Aperture scale:	f/2.8-f/22
Depth of field display:	Via mechanism coupled with aperture setting for direct reading from distance scale
Lens mount:	Nikonos spring-loaded bayonet
Attachment size:	87mm diameter
Dimensions:	93mm dia. x 90.6mm (3.7″ x 3.6″)
Weight:	665g (23 oz.)

DF-11 Viewfinder for UW- Nikkor 15mm f/2.8

Product number:	10758
Optical system:	Inverted Galilean telescope; usable only underwater
Optical construction:	3 elements in 3 groups
Magnification:	0.24x
Field of view:	90/picture coverage
Parallax compensation:	Built-in parallax correction marks for 1.5m, 0.6m or 0.3m (5 ft., 2 ft. or 1 ft.)
Mounting:	With clamping screw in camera accessory shoe
Dimensions:	68mm dia. x 71mm
Weight:	280g

UW-Nikkor 20mm f/2.8

This lens is intended exclusively for underwater photography

Product number:	10314
Focal length:	20mm
Maximum aperture:	f/2.8
Picture angle:	78° (underwater)
Optical construction:	9 elements in 7 groups (including front protective glass port)
Minimum focusing distance:	0.4m (16 in.)
Aperture:	Manual aperture diaphragm
Aperture scale:	f/2.8-f/22
Depth of field display:	Via indicators on aperture selector knob; settings marked in yellow, orange and red for apertures f/4, f/5.6 and f/11
Lens mount:	Nikonos spring-loaded bayonet
Attachment size:	67mm diameter
Dimensions:	70mm dia. x 74mm (2.7″ x 2.9″)
Weight:	350g (12 oz.)

DF-12 Viewfinder for UW-Nikkor 20mm f/2.8 and 28mm f/3.5

Product number:	10759
Optical system:	Inverted Galilean telescope; usable only underwater
Optical construction:	3 elements in 3 groups
Magnification:	0.35x
Field of view:	85% picture coverage
Parallax compenstion marks:	20mm, fixed setting at estimated distance 1.5m (4.5 ft.); 28mm, fixed setting at estimated distance 2.0m (6 ft.)
Close-up parallax marks:	20mm, focusing distance 40cm (16 in.); 28mm, focusing distance 60cm (24 in.)
Mounting:	With clamping screw in camera acccessory shoe
Dimensions:	61.5mm dia. x 71mm
Weight:	160g

UW-Nikkor 28mm f/3.5

This lens is intended exclusively for underwater photography

Product number:	10310
Focal length:	28mm
Maximum aperture:	f/3.5
Picture angle:	59° (underwater)
Optical construction:	6 elements in 5 groups (including front protective glass plate)
Minimum focusing distance:	0.6m (24 in.)
Aperture:	Manual aperture diaphragm
Aperture scale:	f/3.5-f/22
Depth of field display:	Via mechanism coupled with aperture setting for direct reading from distance scale
Lens mount:	Nikonos spring-loaded bayonet
Attachment size:	58mm diameter
Dimensions:	62mm dia. x 43.8mm (2.4″ x 1.7″)
Weight:	175g (6 oz.)

W-Nikkor 35mm f/2.5

For use on Land & Underwater (Amphibious)

Product number:	10311
Focal length:	35mm
Maximum aperture:	f/2.5
Optical construction:	6 elements in 4 groups (including front protective glass plate)
Picture angle:	62° on land, 46° 30′ underwater
Minimum focusing distance:	0.8m (2.75′) (33″) (.84m)
Aperture:	Manual aperture diaphragm
Aperture scale:	f/2.5-f/22
Depth of field display:	Via mechanism coupled with aperture setting for direct reading from distance scale
Attachment size:	58mm diameter
Dimensions:	62mm dia. x 39.5mm (2.4″ x 1.5″)
Weight:	160g (6 oz.)

W-Nikkor 80mm f/4

For use on Land & Underwater (Amphibious)

Product number:	10312
Focal length:	80mm
Maximum aperture:	f/4
Optical construction:	4 elements in 4 groups (plus front protective glass plate)
Picture angle:	30° 20′ on land, 22° 45′ underwater
Minimum focusing distance:	1m (3 ft.)
Aperture:	Manual aperture diaphragm
Aperture scale:	f/4-f/22
Depth of field display:	Via mechanism coupled with aperture setting for direct reading from distance scale
Lens mount:	Nikonos spring-loaded bayonet
Attachment size:	58mm diameter
Dimensions:	62mm dia. x 66mm (2.4″ x 2.6″)
Weight:	275g (10 oz.)

DF-10 Viewfinder for Nikkor 80mm f/4

Product number:	10756
Optical system:	Inverted Galilean, Alboda finder for use on land only
Parallax compensation:	The focusing ring on the finder shifts the bright frame to adjust the view for parallax compensation
Weight:	35g

TTL UW Speedlight Set SB-102

Product number:	10102
Application:	High-powered electronic underwater TTL flash unit; automatic TTL flash output control with Nikonos-V; auto flash control via optional Flash Sensor Unit SU-101; manual power levels of "Full", "1/4" and "1/16" with Nikonos III and IVA and V
Electronics:	High-performance thyristor in series circuit controlled via internal camera TTL sensor or optional Flash Sensor Unit SU-101
Guide number:	Full output 32 meters on land (16 underwater), 1/4 output 16 on land (8 underwater), 1/16 output 8 on land (4 underwater) with ISO 100 film inmeters. **Guide No./Land (ft. @ ISO 100 / U/W)** • Full=106 (53) • 1/4=53 (26) • 1/16=26 (13)
Operating range:	TTL, ISO 25=400; f/2.8–f/22 at ISO 100 Non-TTL
Operating distance:	0.3m-11m on land, 0.3m-5.5m underwater, with TTL control, ISO 100; with sensor unit SU-101 (no TTL metering, ISO 100), 0.6m-8m on land at f/4 (0.6m-4m underwater) or 0.6m-4m on land at f/8 (0.6m-2m underwater)
Angle of coverage:	79° (sufficient for 28mm lens) as normal; 94° (sufficient for 15mm lens) via Wide Flash Adapter SW-102
Recycling time/number of flashes:	With C-cell rechargeable NiCd batteries, minimum of 70 flashes with about 5 sec. charging time (depending on the recharge level of the batteries); with Alkaline-manganese batteries; minimum of 120 flashes with about 14 sec. charging time
Power source:	Six 1.5v C-cell type batteries; NiCd rechargeable batteries usable
Target light:	Light fitted at center of flash illuminates along flash axis to facilitate positioning
Slave flash function:	When set for slave triggering, can be triggered via operation of another flash unit
Multiple flash function:	With double bracket and double sync cord accessories, two SB-102 speedlight or one SB-102 and one SB-103 can be used simultaneously for TTL-controlled flash operation
Flash ready-light:	Visible in the camera viewfinder (Nikonos IV-A/V only), and on top of flash head
Mounting:	Via flash bracket (supplied)
Dimensions:	139mm (W) x 152.5mm (H) x 212mm (D), head only
Weight:	1670g (59 oz.), head only without batteries

Wide Flash Adapter SW-102 for SB-102 (replacement)

Product number	10207
Application:	Wide flash adapter. Use to widen angle of coverage of SB-102

TTL UW Speedlight Set SB-103

Product number:	10103
Application:	Electronic underwater TTL flash unit; Automatic TTL flash output control with Nikonos-V; manual power levels of "Full", "1/4", and "1/16" output with Nikonos III, IVA and V
Electronics:	High-performance thyristor in series circuit controlled via internal camera TTL sensor with Nikonos-V
Guide number:	Full output 20 meters on land (14 underwater), 1/4 output 10 meters on land (7 underwater), 1/16 output 5 meters on land (3.5 underwater), with ISO 100 film in meters **Guide No./Land** **(ft. @ ISO 100 / U/W)** • Full=66 (33) • 1/4=33 (16) • 1/16=16 (8)
Angle of coverage:	79° (sufficient for 28mm lens) as normal; 94° (sufficient for 15mm lens) via Wide Flash Adapter SW-103
Batteries:	Four 1.5v AA-type (penlight) batteries; NiCd rechargeable batteries usable
Number of flashes:	Approximately 50 flashes with NiCd rechargeable batteries; approximately 130 flashes with alkaline-manganese batteries
Recycling time:	Approximately 6 sec. with NiCd rechargeable batteries; approximately 9 sec. with fresh alkaline-manganese batteries
Operating range:	TTL, ISO 25-400; f/2.8-f/22 at ISO 100, non-TTL
Operating distance:	0.3m-7m on land, 0.3m-3.5m underwater, with TTL control, ISO 100
Multiple flash function:	With double bracket and double sync cord, two SB-103 speedlights or one SB-102 and one SB-103 can -be used simultaneously for TTL-controlled flash operation
Dimensions:	175mm (W) x 130mm (H) x 99mm (D), head only
Weight:	780g (27 oz.), head only without batteries

Wide Flash Adapter SW-103 for SB-103 (replacement)

Product number:	12016
Application:	Wide flash adapter. Use to widen angle of coverage of SB-103 to 94°.

Extension Arm Set

Product Number: 10203

Application: For extending the bracket arm of TTL UW Speedlights SB-102/SB-103

TTL UW Double Sync Cord

Product number: 10204

Application: For Nikonos V to provide underwater TTL operation with two TTL UW Speedlights SB-102/103

Double Flash Bracket

Product number: 10214

Application: For mounting two TTL UW speedlights SB-102/103 on the Nikonos V

Sensor Holder for SB-102

Product number: 10202

Flash Sensor Unit SU-101

Product number: 10746

Application: To provide non-TTL automatic flash operation with UW Speedlights SB-101/102

Speedlight Carrying Case SS-101 (replacement)

Product number: 10741

Application: Spacious carrying case to transport complete speedlight with camera; inside pockets provided for film, O-rings, etc.

Construction: Beige-patterned leatherette with dark brown and black decorative panels

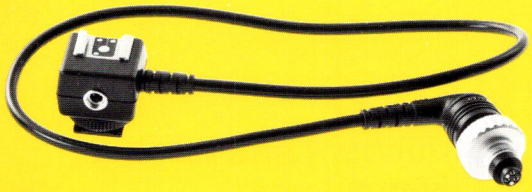

Non-UW TTL Sync Cord for Nikonos-V

Product number: 10205

Application: Provides a means to use Speedlights equipped with ISO-type hot shoe (speedlights SB-15/16B/18/20/22, with Nikonos-V; full TTL operation provided via dedicated contacts on shoe; cannot be used underwater; 60cm (8 in.) cord length

Weight: 65g

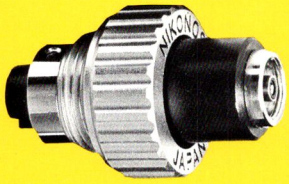

Non-UW Flash Adapter for Nikonos IV-A

Product number: 10729

Application: Provides a means to use conventional speedlights with Nikonos IV-A via sync connecting cord; cannot be used underwater

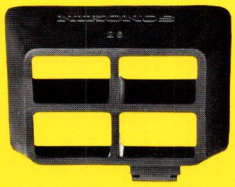

Underwater Frame Finder for 28mm Lens

Product number: 10751

Underwater Frame Finder for 35mm/80mm Lenses

Product number: 10753

Rigid Lens Hood/Filter Adapter 52mm

Product number: 10625

Application: Enables mounting of 52mm diameter threaded filters on 35mm and 80mm lenses

Rubber Lens Hood for 35mm Lens

Product number: 10626

Application: Slip-over design protects entire lens; for W-Nikkor 35mm f/2.5 lens only

Plastic Lens Protector

Product number: 10620

Application: Mounts on 58mm thread of 28/35/80mm Nikonos lenses; protects the lens front from stones, etc.

CL-50A Hard Lens Case for 28/35mm Lenses

Product number: 10418

CL-51 Hard Lens Case for 80mm Lens

Product number: 10419

Front Lens Cap for 28/35/80mm Lenses

Product number: 10804

Application: 60mm diameter slip-on design for the Nikonos lenses with 58mm attachment size (28/35, 35/2.5, 80/4)

Rear Lens Cap for all Nikonos Underwater Lenses

Product number: 10730

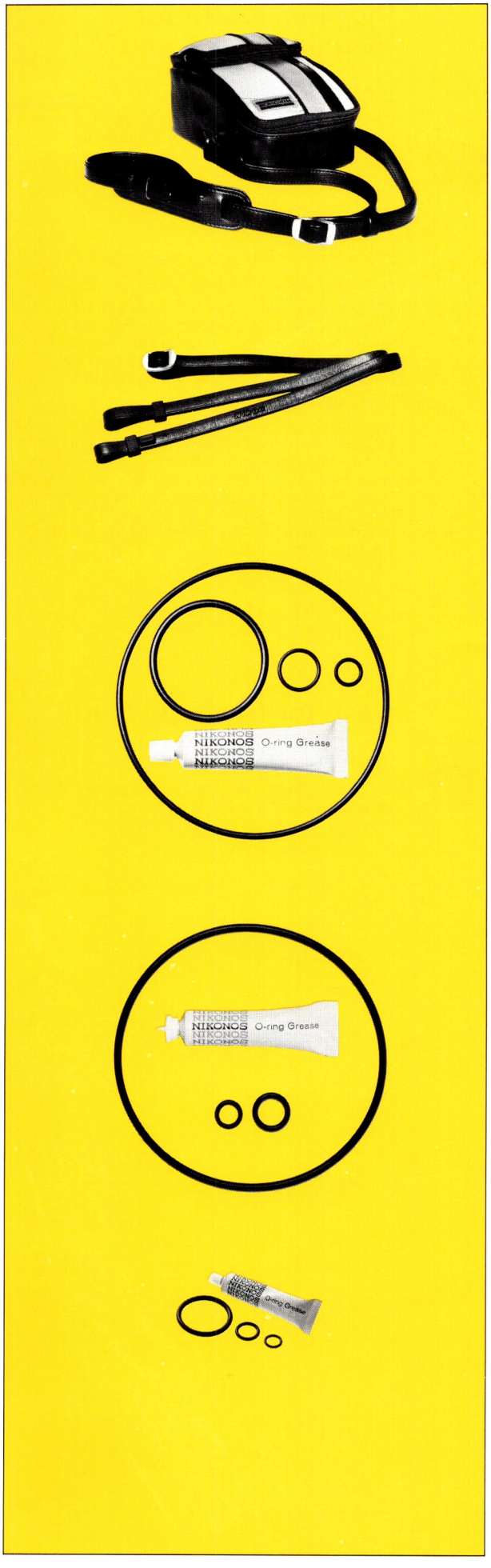

Custom Shoulder Case for Nikonos IV-A, V

Product Number: 10420

Application: Shoulder carrying case for camera with 35mm lens; zippered pocket provides space to store incidentals

Construction: Beige-patterned leatherette with dark brown and black decorative panels

Neck Strap for Nikonos IV-A, V (replacement)

Product number: 10422

O-ring Set for Nikonos V (replacement)

Product number: 10713

Consisting of: Four rubber O-rings (camera back, flash terminal cap, battery compartment and lens) and one tube of silicone grease; one spare set is provided with the camera at time of purchase

O-ring Set for TTL UW Speedlight SB-102 (replacement)

Product number: 10712

Consisting of: Three rubber O-ring (battery compartment, flash contact plug) and one tube of silicone grease; one spare set is provided with the speedlight at time of purchase

O-ring Set for TTL UW Speedlight SB-103 (replacement)

Product number: 10711

Consisting of: Three rubber O-rings (battery compartment, flash contact plug) and one tube of silicone grease; one spare set is provided with the speedlight at the time of purchase

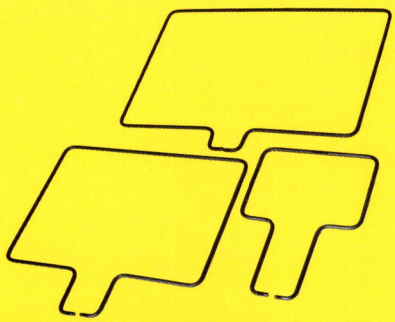

Close-up Outfit for Nikonos III, IVA and V

Product number:	10705
Consisting of:	Close-up attachment lens (can be mounted and removed underwater); three field frames for 28mm, 35mm and 80mm lenses; frame support bracket for precise camera-to-subject distances; holder for close-up attachment lens; and carrying case for close-up outfit and camera
Optical construction:	2 elements in 2 groups
Working distance:	235mm from front of lens to field frame
Focus setting:	At infinity focus on the lens
Exposure control:	TTL auto exposure control or manual with Nikonos-V w/SB 102 or 103 speedlights; non TTL auto exposure control or manual with Nikonos-IVA w/SB 101 or 102 speedlights; manual only with Nikonos III w/SB 101, 102 or 103 speedlights
Weight:	570g (with 28mm field frame)
Magnification:	With 28mm lens underwater, M = 1:6 (field 144mm x 216m); with 35mm lens underwater, M = 1:4.5 (field 109mm x 164mm); with 80mm lens underwater, M = 1:2.2 (field 53mm x 79mm); with 35mm lens on land (and using 28mm field frame), M = 1:6.5 (field 155mm x 233mm); with 80mm lens on land (and using 35mm field frame), M = 1:3 (field 71mm x 106mm)

Case for Close-up Outfit

Product number:	10706
Application:	Fitted foam-lined case with pre-cut space for complete close-up outfit with camera

7x20 CF Travelite II

Product number:	7840
Magnification:	7x
Objective diameter:	20mm
Angular field of view:	Real, 7.1°; Apparent 50°
Field of view:	373 feet at 1000 yards
Exit pupil:	2.9mm
Relative brightness:	8.4
Twilight factor:	11.8
Weight:	212.6g (7.5 oz.)
Dimensions:	83.9mm (L) x 110mm (W) (3.3″ x 4.3″)

9x25 CF Travelite II

Product number:	7841
Magnification:	9x
Objective diameter:	25mm
Angular field of view:	Real, 5.6°; Apparent, 50°
Field of view:	294 feet at 1000 yards
Exit pupil:	2.8mm
Relative brightness:	7.8
Twilight factor:	15
Weight:	297.7g (10.5 oz.)
Dimensions:	110mm(H) x 113(W) (4.3″ x 4.45″)

8x23 CF Venturer II

Product number:	7842
Magnification:	8x
Objective diameter:	23mm
Angular field of view:	Real, 6.3°; Apparent, 50.4°
Field of view:	331 feet at 1000 yds
Exit pupil:	2.9mm
Relative brightness:	8.4
Twilight factor:	13.6
Weight:	260g (8.9 oz.)
Dimensions:	101mm (L) x 104mm (W) (3.6″ x 3.7″)

10x25 CF Venturer II

Product number:	7843
Magnification:	10x
Objective diameter:	25mm
Angular field of view:	Real, 5°; Apparent 50.0°
Field of view:	263 feet at 1000 yards
Exit pupil:	2.5mm
Relative brightness:	6.25
Twilight factor:	15.8
Weight:	290g (9.8 oz.)
Dimensions:	111mm (L) x 104mm (W) (4.0″ x 3.7″)

8x20D CF LeTour

Product number:	7827
Magnification:	8x
Objective diameter:	20mm
Angular field of view:	Real, 6.5°; Apparent, 52°
Field of view:	341 feet at 1000 yards
Exit pupil:	25mm
Relative brightness:	6.3
Twilight factor:	12.6
Weight:	195g (6.9 oz.)
Dimensions:	97mm (L) x 100mm (W) (3.8″ x 3.9″)

10x25D CF LeTour

Product number:	7828
Magnification:	10x
Objective diameter:	25mm
Angular field of view:	Real, 5.2°; Apparent, 52°
Field of view:	273 feet at 1000 yards
Exit pupil:	2.5mm
Relative brightness:	6.3
Twilight factor:	15.8
Weight:	240g (8.5 oz.)
Dimensions:	117mm (L) x 106mm (W) (4.6″ x 4.2″)

6-12x24D CF Le Tour Zoom Binocular

Product number:	7861
Magnification:	6x–12x
Objective Diameter:	24mm
Angular field of view:	Real, 6.9° (at 6x); Apparent 41.4°
Field of view:	363 (at 6x) at 1000 yards
Exit pupil:	4mm (at 6x)
Relative brightness:	16 (at 6x)
Twilight factor:	15.5mm
Weight:	595g (21 ounces)
Dimensions:	147mm (L) x 114mm (w) (5.8″ x 4.5″)

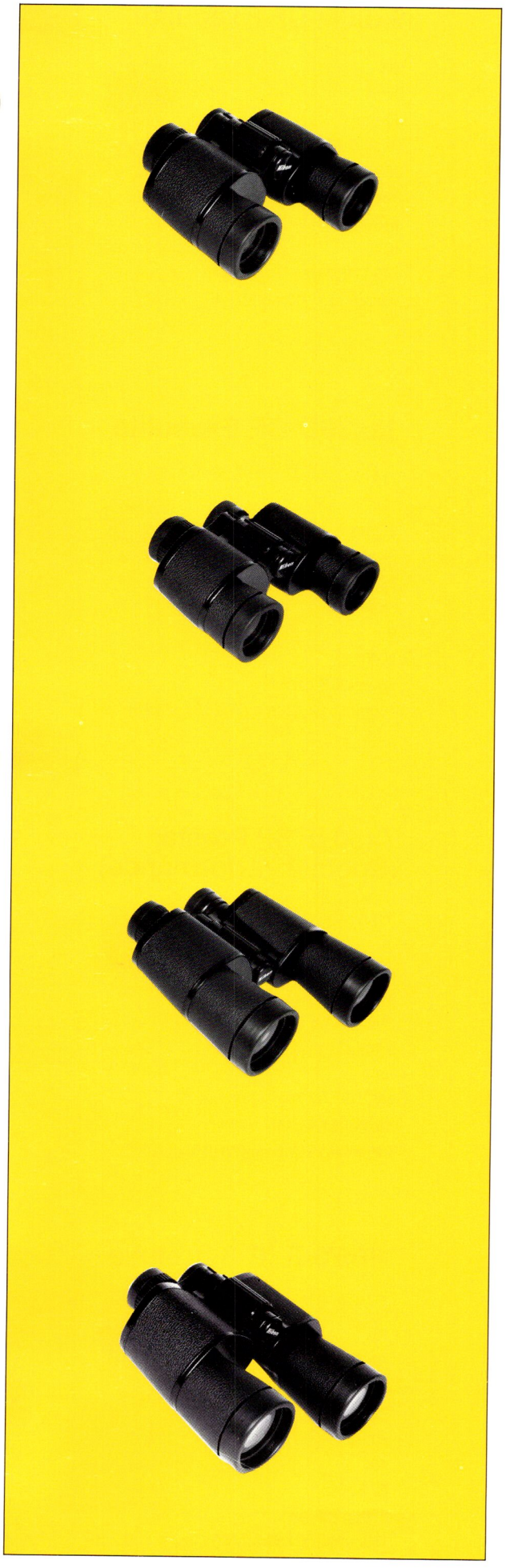

7x35 CF Sporter

Product number:	7855
Magnification:	7x
Objective diameter:	35mm
Angular field of view:	Real, 9.3°; Apparent 65.0°
Field of view:	488 feet at 1000 yards
Exit pupil:	5mm
Relative brightness:	25
Twilight factor:	15.8
Weight:	670g (23.6 oz.)
Dimensions:	133mm(L) x 184mm(W) (5.2″ x 7.2″)

8x35 CF Eaglescout

Product number:	7856
Magnification:	8x
Objective diameter:	35mm
Angular field of view:	Real, 8.2°; Apparent, 65.6°
Field of view:	431 feet at 1000 yards
Exit pupil:	4.4mm
Relative brightness:	19.4
Twilight factor:	16.7
Weight:	660g (23.6 oz.)
Dimensions:	127mm(L) x 184mm(W) (5″ x 7.2″)

7x50 CF Starvue

Product number:	7857
Magnification:	7x
Objective diameter:	50mm
Angular field of view:	Real, 7.2°; Apparent, 50.4°
Field of view:	378 feet at 1000 yards
Exit pupil:	7.1mm
Relative brightness:	50.4
Twilight factor:	18.7
Weight:	1040g (36.7 oz.)
Dimensions:	192mm(L) x 211mm(W) (7.6″ x 8.4″)

10x50 CF Sentinel

Product number:	7858
Magnification:	10x
Objective diameter:	50mm
Angular field of view:	Real, 6.5°; Apparent, 65°
Field of view:	341 feet at 1000 yards
Exit pupil:	5mm
Relative brightness:	25
Twilight factor:	22.4
Weight:	1030g (36.4 oz.)
Dimensions:	183mm(L) x 211mm(W) (7.2″ x 8.3″)

Note: The products on this page are listed for information purposes only—No longer available.

9x30D CF Executive

Product number:	711
Magnification:	9x
Objective diameter:	30mm
Angular field of view:	Real, 6.7°; Apparent, 60.3°
Field of view:	352 feet at 1000 yards
Exit pupil:	3.3mm
Relative brightness:	10.9
Twilight factor:	16.4
Weight:	445g (15.7 oz.)
Dimensions:	119mm(L) x 113mm(W) (4.7″ x 4.4″)

12x36D CF Executive

Product number:	714
Magnification:	12x
Objective diameter:	36mm
Angular field of view:	Real, 5°; Apparent, 60°
Field of view:	263 feet at 1000 yards
Exit pupil:	3mm
Relative brightness:	9
Twilight factor:	20.8
Weight:	580g (20.5 oz.)
Dimensions:	160mm(L) x 120mm(W) (6.3″ x 4.7″)

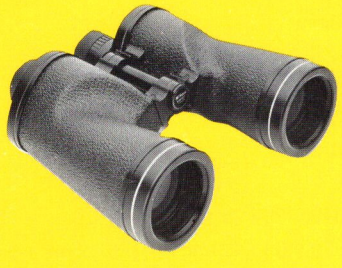

7x50 IF SP Prostar (Special Performance)

Product number:	7789
Magnification:	7x
Objective diameter:	50mm
Angular field of view:	Real, 7.3°; Apparent, 51.1°
Field of view:	383 feet at 1000 yards
Exit pupil:	7.1mm
Relative brightness:	50.4
Twilight factor:	18.7
Weight:	1470g (51.5 oz.)
Dimensions:	216mm(L) x 210mm(W) (8.5″ x 8.46″)

10x70 II IF Astroluxe

Product number:	7788
Magnification:	10x
Objective diameter:	70mm
Angular field of view:	Real, 5.1°; Apparent, 51°
Field of view:	268 feet at 1000 yards
Exit pupil:	7mm
Relative brightness:	49
Twilight factor:	26.5
Weight:	2500g (88 oz.)
Dimensions:	158mm(L) x 258mm(W) (10.2″ x 10.2″)

8x40D CF Classic Eagle (waterproof/fogproof)

Product number:	7826
Magnification:	8x
Objective diameter:	40mm
Angular field of view:	Real, 7°; Apparent, 56°
Field of view:	368 feet at 1000 yards
Exit pupil:	5mm
Relative brightness:	25
Twilight factor:	17.9
Weight:	840g (39.7 oz.)
Dimensions:	169mm(L) x 124mm(W)(6.7″ x 4.9″)

8-16x40 CF Zoom XL

Product number:	7860
Magnification:	8-16x (zoom)
Objective diameter:	40mm
Angular field of view:	Real, 5.2° (at 8x); Apparent, 41.6° (at 8x)
Field of view:	273 feet at 1000 yards (at 8x)
Exit pupil:	5mm (at 8x)—2.5 (at 16x)
Relative brightness:	25 (at 8x)—6.3 (at 16x)
Twilight factor:	17.9 (at 8x)—25.3 (at 16x)
Weight:	875g (30.9 oz.)
Dimensions:	171mm(L) x 198mm(W)(6.74″ x 7.8″)

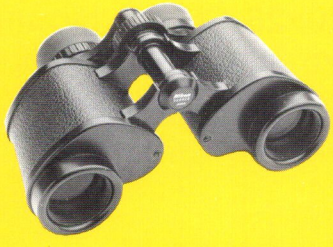

8x30E CF

Product number:	782
Magnification:	8x
Objective Diameter:	30mm
Angular field of view:	Real, 8.3°; Apparent, 66.4°
Field of view:	436 ft. at 1000 yds.
Exit pupil:	3.8mm
Relative brightness:	14.4
Twilight factor:	15.5
Weight:	575g (20.3 oz.)
Dimensions:	99mm (L) x 178mm (W) (3.9″ x 7.0″)

Also available:	
Product number:	780 7X35E CF
Product number:	784 10x35E CF

8x30D IF RC Trailblazer (camouflage, rubber-armored, waterproof/fogproof)

Product number:	7782 (camo)
Magnification:	8x
Objective diameter:	30mm
Angular field of view:	Real, 7.5°; Apparent, 60°
Field of view:	394 feet at 1000 yards
Exit pupil:	3.8mm
Relative brightness:	14.4
Twilight factor:	15.5
Weight:	680g (23.9 oz.)
Dimensions:	130mm(L) x 124mm(W) (5.1″ x 4.9″)

7x50 IF RC (rubber-armored, waterproof/fogproof)

Product number:	7794 (orange, Yachtsman)
Magnification:	7x
Objective diameter:	50mm
Angular field of view:	Real, 7.3°; Apparent, 51.1°
Field of view:	383 feet at 1000 yards
Exit pupil:	7.1mm
Relative brightness:	50.4
Twilight factor:	18.7
Weight:	1360g (48 oz.)
Dimensions:	190mm(L) x 210mm(W) (7.5″ x 8.3″)

10x25 CF RC Mountaineer (gray, rubber-armored, waterproof/fogproof)

Product number:	7845
Magnification:	10x
Objectve Diameter:	25mm
Angular field of view:	Real, 5°; Apparent, 50°
Field of view:	263 feet at 1000 yds.
Exit pupil:	2.5mm
Relative Brightness:	6.3
Twilight factor:	15.8
Weight:	485g (17 oz.)
Dimensions:	111mm(L) x 114(W) (4.4″ x 4.5″)

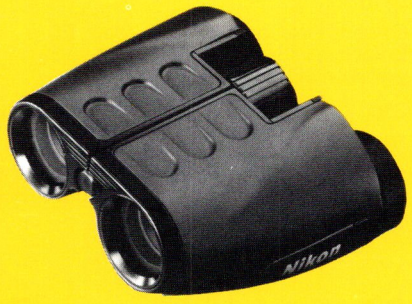

8x23 CF RC Mountaineer (gray, rubber-armored, waterproof/fogproof)

Product number:	7846
Magnification:	8x
Effective objective diameter:	23mm
Angular field of view:	Real, 6.3°; Apparent, 50.0°
Field of view:	329 ft. at 1000 yards
Exit pupil:	2.9mm
Relative brightness:	8.4
Twilight factor:	13.6
Weight:	385g (13.6 oz.)
Dimensions:	103mm(L) x 114mm(W) (4.1″ x 4.5″)

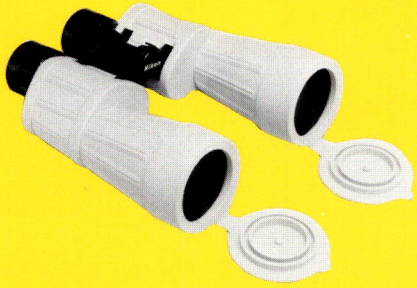

7x50 IF RC Seasider (yellow, rubber-armored, waterproof/fogproof)

Product number:	7866
Magnification:	7x
Objective diameter:	50mm
Angular field of view:	Real, 6.2°; Apparent, 43.4°
Field of view:	326 ft. at 1000 yards
Exit pupil:	7.1mm
Relative brightness:	50.4
Twilight factor:	18.7
Weight:	801g (28.3 ounces)
Dimensions:	206mm(L) x 198mm(W) (8.1″ x 7.8″)

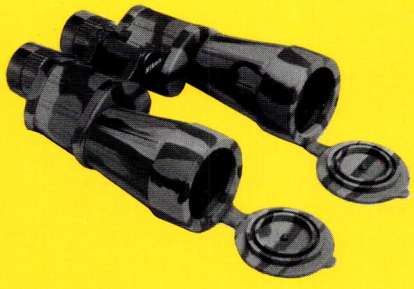

7x50 IF RC Naturalist XL (camouflage, rubber-armored, waterproof/fogproof)

Product number:	7867
Magnification:	7x
Objective diameter:	50mm
Angular field of view:	6.2°
Field of view:	326 ft. at 1000 yards
Exit pupil:	7.1mm
Relative brightness:	50.4
Twilight factor:	18.7
Weight:	801g (28.3 ounces)
Dimensions:	206mm(L) x 198mm(W) (8.1″ x 7.8″)

Special Photo Attachment

Product number:	7770
Application:	converts Fieldscope and Fieldscope ED to 800mm f/13.3 lens for quality photography* via Nikon SLR camera
Weight:	330g (11.6)
Dimensions:	59mm dia. x 140mm

* unlike most camera adapters which are just metal tubes, this attachment is a metal encased lens grouping of fine Nikon optics.

20-45x60 Fieldscope Zoom (water resistant)

Product number:	7832
Magnification:	20x-45x
Effective objective diameter:	60mm
Angular field of view:	Real, 2 (20x); Apparent, 40 (20x)
Field of view:	105 ft. (20x) at 1000 yards
Exit pupil:	3mm
Relative brightness:	9
Twilight factor:	36.4
Weight:	980g (34.6 oz.)
Dimensions:	326mm(L) x 72mm(W) (12.8″ x 2.83″)

20-45x60 Fieldscope ED Zoom (water resistant)

Product number:	7833
Magnification:	20x-45x
Effective objective diameter:	60mm
Angular field of view:	Real, 2; Apparent, 40
Field of view:	105 ft. at 1000 yards
Exit pupil:	3mm
Relative brightness:	9
Twilight factor:	36.4
Weight:	995g (35 oz.)
Dimensions:	326mm(L) x 72mm(W) (12.8″ x 2.83″)

15–45x60 RC Spotting Scope Zoom

Product number	7835
Magnification:	15–45x
Objective diameter:	60mm
Angular field of view:	Real, 2.54 (15x); Apparent, 38.1 (15x)
Field of view:	145.34 ft. (15x) at 1000 yards
Exit pupil:	4–1.33mm
Relative brightness:	16–1.77
Dimensions:	321mm (L) x 80mm (W) (12.52″x3.12″)

Note: The above Spotting Scope is also available in a fixed 20x version.

Eyepieces for Spotting Scope

15x Eyepiece

Product number: 7772

20x Eyepiece (repl.)

Product number: 7775

30x Eyepiece

Product number: 7773

40x Eyepiece

Product number: 7774

60x Eyepiece (for ED model)

Product number: 7811

Lens Hood for Spotting Scope

Product number: 7783

7x35 StayFocus Plus

Product number:	7873
Focusing system:	Central
Magnification:	7
Objective diameter:	35mm
Angular field of view:	Real, 8.6°; Apparent, 60.2°
Field of view:	451.5 ft at 1000 yards
Exit pupil:	5mm
Relative brightness:	25
Eye relief:	9.0mm
Twilight factor:	15.7
Weight:	698g (20.1 ounces)
Length:	133mm
Width:	181mm

7x50 StayFocus Plus

Product number:	7874
Focusing system:	Central
Magnification:	7
Objective diameter:	50mm
Angular field of view:	Real, 6.2°; Apparent, 43.4°
Field of view:	325.5 ft. at 1000 yards
Exit pupil:	7.1mm
Relative brightness:	50.4
Eye relief:	16.4mm
Twilight factor:	18.7
Weight:	855g (29.8 ounces)
Dimensions:	20.8mm(L) x 195mm(W)

10x50 StayFocus Plus

Product number:	7875
Focusing system:	Central
Magnification:	10
Objective diameter:	50mm
Angular field of view:	Real, 6.0°; Apparent, 60°
Field of view:	315.0 ft. at 1000 yards
Exit pupil:	5mm
Relative brightness:	25
Eye relief:	9.0mm
Twilight factor:	22.4
Weight:	810g (28.2 ounces)
Length:	190mm
Width:	195mm

7-15x35 CF Scoutmaster Zoom

Product number:	7863
Magnification:	7x–15x
Objective diameter:	35mm
Angular field of view:	Real, 5.8°; Apparent, 60.2
Field of view:	305 ft. (at 7x) at 1000 yards
Exit pupil:	5mm (at 7x)
Relative brightness:	25 (at 7x)
Twilight factor:	15.7 (at 7x)
Weight:	698g (24.2 ounces)
Dimensions:	144.8mm(L) x 178mm(W) (5.7″ x 7.0″)

7x35 CF Naturalist II

Product number:	7870
Magnification:	7x
Objective diameter:	35mm
Angular field of view:	Real, 8.6°; Apparent, 60.2°
Field of view:	451 ft. at 1000 yards
Exit pupil:	5.0mm
Relative brightness:	25
Twilight factor:	15.7
Weight:	580g (20.1 ounces)
Dimensions:	122mm(L) x 170mm(W) (4.8″ x 6.7″)

10x50 CF Lookout II

Product number:	7872
Magnification:	10x
Objective diameter:	50mm
Angular field of view:	Real, 6.0°; Apparent, 60°
Field of view:	315 ft. at 1000 yards
Exit pupil:	5mm
Relative brightness:	25
Twilight factor:	22.4
Weight:	810g (28.2 ounces)
Dimensions:	180mm(L) x 185mm(W) (7.1″ x 7.3″)

VN-860

Capture all those great family moments with the new Nikon VN-860.

You'll have alot of fun with the VN-860's powerful 8X zoom lens. You can shoot everything from the wide open space of the great outdoors or large get-togethers to zoom-ins of faraway scenes and faces. And with the macro autofocus function, you can get as close as a half-inch from your subject. You just point and shoot... even in candlelight! The VN-860 enables you to capture the scene's every detail.

SPECIFICATIONS

Product number	8180
Video recording system	Rotary two-head, helical scanning FM system
Audio recording system	Rotary head, FM system
Video signal	NTSC color, EIA standards
Usable cassette	8mm video format cassette
Tape speed	SP: Approx. 1.43cm/sec. (19/32 in./sec.) LP: Approx. 0.72cm/sec. (5/16 in./sec.) (playback only)
Recording time	SP mode: 2 hours (E6/P6-120)
Playback time	SP mode: 2 hours (E6/P6-120) LP mode: 4 hours (E6/P6-120)
Fast forward/rewind time	Approx. 6.5 min. (E6/P6-120)
Image device	CCD (Charged Coupled Device)
Viewfinder	Electronic viewfinder (black and white)
Lens	Combined 8x power zoom lens f=8.5-68mm (11/32–2-3/4 in.) f1.6 with macro Filter diameter: 46mm (1-13/16 in.)
Autofocus system	TTL
Color temperature	Automatic, HOLD INDOOR 3,200 K, OUTDOOR 5,800K
Minimum illumination	2 lux
Illumination range	2 lux-100,000 lux (0.2 to 9,294 footcandles)
Recommended illumination	More than 100 lux (9 footcandles)
Aperture correction	Automatic, with backlight adjustment
Input and Output Connectors:	
Video input/output*	Phono jack, 1 Vp-p, 75 ohms unbalanced sync negative
Audio input/output*	Phono jack, Input: –7.5dBs, input impedance more than 47 kilohms Output: –7.5dBs, at output impedance less than 1 kilohm
RFU DC OUT	Special mini jack, 5V DC
Earphone jack	Mini jack, 8 ohm impedance
Remote jack	Stereo mini-mini jack

* Video/audio input and output is switched with the IN/OUT selector.

General:	
Power requirements	On battery mounting surface 6.0V (battery pack) 7.5V (AC power adaptor) 9.0V (alkaline batteries)
Power consumption	6.2W (camera recording) including the viewfinder
Installation	Vertically, horizontally
Operating temperature	0°C to 40°C (32°F to 104°F)
Storage temperature	–20°C to 60°C (–4°F to 140°F)
Dimensions (WxHxD)	Approx. 111 x 139 x 321mm (4-3/8 x 5-1/2 x 12-3/4 in.) including the lens hood
Weight	Approx. 1.1kg (2 lb. 3 oz.) excluding the battery and cassette
Microphone	Electret condenser microphone, unidirectional, monaural type
Wireless Remote Commander RMT-506N	
Remote control system	Infrared control
Command mode	VTR 2
Power requirements	3V DC, 2 size AA batteries
Dimentions (WxHxD)	Approx 60 x 25 x 123mm (2-3/8 x 1 x 4-7/8 in.)

Design and specifications subject to change without notice.

© Nikon Inc. 1991

Nikon®
We take the world's greatest pictures.®

The power of full-size models in the compact, high-fidelity stereo VN-700!

You'll find all the power and extra features of full-size camcorders in Nikon's amazingly compact "Hi8" camcorder. From high-fidelity stereo recording to versatile editing, the compact new VN-700 will take your breath away with sound and images that recreate memories you'll want to relive– and share with family and friends– time and again. Nikon high technology makes this handsomely designed unit so sophisticated it's actually point-and-shoot easy-to-use.

SPECIFICATIONS

Product number	8120
Video recording system	Four rotary heads, helical scanning FM system
Audio recording system	Rotary head, FM system
Video signal	NTSC color, EIA standards
Usable cassette	8mm video format cassette
Tape speed	SP: Approx. 1.43cm/sec. (19/32 in./sec.) LP: Approx. 0.72cm/sec. (5/16 in./sec.) (playback only)
Recording time	SP mode: 2 hours (E6/P6-120)
Playback time	SP mode: 2 hours (E6/P6-120) LP mode: 4 hours (E6/P6-120)
Fast forward/rewind time	Approx. 8 min. (E6/P6-120)
Image device	CCD (Charged Coupled Device)
Viewfinder	Electronic viewfinder (black and white)
Lens	Combined 8x power zoom lens f–7.8-62.4mm (5/16–2-1/2 in.) f1.6 to 2.2 with macro Filter diameter: 37mm (1-1/2 in.)
Autofocus system	TTL
Color temperature	Automatic, HOLD INDOOR 3,200 K, OUTDOOR 5,800K
Minimum illumination	2 lux (f1.6)
Illumination range	2 lux-100,000 lux
Recommended illumination	More than 100 lux
Input and Output Connectors:	
Video input/output	Phono jack, 1 Vp-p, 75 ohms, unbalanced, sync negative
S Video input/output	4-pin mini DIN Luminance signal: 1 VP-p, 75 ohms, unbalanced, sync negative Chrominance signal: 0.286 Vp-p, 75 ohms, unbalanced
Audio input/output	Phono jack, (2; stereo L and R) Input: –7.5dBs, input impedance more than 47 kilohms Output: –7.5dBs, at output impedance less than 2.2 kilohms
RFU DC OUT	Special mini-jack, 5V DC
Headphone jack	Stereo mini-jack (ø3.5)
Remote jack	Stereo mini-jack (ø2.5)
Mic jack	Stereo mini-jack, –66 dBs, low impedance, with 2.5 to 3V DC, output impedance 6.8 kilohms (ø3.5)
General:	
Power requirements	On battery mounting surface 6.0V (battery pack) 7.5V (AC power adaptor)
Power consumption	5.5W (camera recording) including the viewfinder
Installation	Vertically, horizontally
Operating temperature	0°C to 40°C (32°F to 104°F)
Storage temperature	–20°C to 60°C (–4°F to 140°F)
Dimensions (WxHxD)	Approx. 109 x 105 x 178mm (4-3/8 x 4-1/4 x 7-1/8 in.) including the lens hood
Weight	Approx. 790g (1 lb. 12 oz.) excluding the battery and cassette
Microphone	Electret condenser microphone, stereo ype
Wireless Remote	RM-152KN

Design and specifications subject to change without notice.

© Nikon Inc. 1991

Nikon®
We take the world's greatest pictures.®

VN-310

What a great way to go places!

Whatever the destination, be sure to take the Nikon VN-310 camcorder along with you. Incredibly compact and ultra-light, the VN-310 fits comfortably in one hand. Yet for its size, it boasts all the features that ensure you great video images and rich Hi-Fi stereo sound at the touch of a button. The Nikon VN-310. Never has it been easier or more fun to make movies of all your favorite places and faces. Try it, and you'll know it's the only way to go.

SPECIFICATIONS

Product number	8152
Video recording system	Four rotary heads, helical scanning FM system
Audio recording system	Rotary head, FM system
Video signal	NTSC color, EIA standards
Usable cassette	8mm video format cassette
Tape speed	SP: Approx. 1.43cm/sec. (19/32 in./sec.) LP: Approx. 0.72cm/sec. (5/16 in./sec.) (playback only)
Recording time	SP mode: 2 hours (E6/P6-120)
Playback time	SP mode: 2 hours (E6/P6-120) LP mode: 4 hours (E6/P6-120)
Fast forward/rewind time	Approx. 8 min. (E6/P6-120)
Image device	CCD (Charged Coupled Device)
Viewfinder	Electronic viewfinder (black and white)
Lens	Combined 6x power zoom lens f=5.8-35mm (1/4–7/16 in.) f1.8 with macro Filter diameter: 37mm (1-1/2 in.)
Autofocus system	TTL
Color temperature	Automatic INDOOR 3,200 K, OUTDOOR 5,800K
Minimum illumination	3 lux (f1.8)
Illumination range	3 lux-100,000 lux (0.X to 9,294 footcandles)
Recommended illumination	More than 100 lux (9 footcandles)
Input and Output Connectors:	
Video input/output	Phono jack, 1 Vp-p, 75 ohms unbalanced sync negative
Audio input/output	Phono jack, (2; stereo L and R) Input: –7.5dBs, input impedance more than 47 kilohms Output: –7.5dBs, at output impedance less than 2.2 kilohms
RFU DC OUT	Special mini jack, 5V DC
Remote jack	Stereo mini-mini jack (ø3.5)
Mic jack	Stereo mini-jack, –66 dBs, low impedance, with 2.5 to 3V DC, output impedance 6.8 kilohms (ø3.5)
General:	
Power requirements	On battery mounting surface 6.0V (battery pack) 7.5V (AC power adaptor)
Power consumption	5.6W (camera recording) including the viewfinder
Installation	Vertically, horizontally
Operating temperature	0°C to 40°C (32°F to 104°F)
Storage temperature	–20°C to 60°C (–4°F to 140°F)
Dimensions (WxHxD)	Approx. 105 x 99 x 166mm (4-1/4 x 4 x 6-5/8 in.) including the lens hood
Weight	Approx. 590g (1 lb. 4 oz.) excluding the battery and cassette
Microphone	Electret condenser microphone, stereo type
Wireless Remote	RM-152KN

Design and specifications subject to change without notice.

© Nikon Inc. 1991

Nikon®
We take the world's greatest pictures.

Nikon VN-300

Product number	8150
Video recording system	Four rotary heads Helical scanning FM system
Audio recording system	Rotary head, FM system
Video signal	NTSC color, EIA standards
Usable cassette	8mm video format cassette
Tape speed	SP: Approx. 1.43cm/sec. (1/16 in./sec.) LP: Approx. 0.72cm/sec. (1/32 in./sec.) (playback only)
Recording time	SP mode: 2 hours (P6-120)
Playback time	SP mode: 2 hours (P6-120) LP mode: 4 hours (P6-120)
Fast forward/rewind time	Approx. 8 min. (P6-120)
Image device	CCD (Charged Coupled Device)
Viewfinder	Electronic viewfinder (black and white)
Lens	Combined 6x power zoom lens f=7-42mm, (9/32 to 1-11/16 ins.), f2.0 with macro filter diameter: 37mm (1-1/2 ins.)
Autofocus system	TTL
Minimum illumination	5 lux (f2.0)
Illumination range	5 lux-100,000 lux (0.5 to 9,290 footcandles)
Recommended illumination	More than 150 lux (14 footcandles)
Aperture control	Automatic
Input and Output Connectors:	
Video input/output	Selectable with the INPUT/OUTPUT selector Phono jack (1), 1 Vp-p, 75 ohms unbalanced sync negative
Audio input	Selectable with the INPUT/OUTPUT selector, Phono jack (1), –7.5dBs, input impedance more than 47 kilohms
Audio output	–7.5dBs, (at output impedence 47 kilohms) impedance less than 2.2 kilohms
RFU DC OUT	Special mini jack, 5V DC
Remote jack	Stereo mini-mini jack
Microphone jack	Minijack, –66dBs, low impedance with 2.5-3V DC output, impedance at 6.8 kilohms
General:	
Power requirements	On battery mounting surface 6.0V (battery pack) 7.5V (AC power adapter) 9.0V (alkaline batteries)
Power consumption	4.8W (camera recording) including the viewfinder
Installation	Vertically, horizontally
Operating temperature	0°C to 40°C (32°F to +104°F)
Storage temperature	–20°C to +60°C (14°F to +140°F)
Dimensions	Approx. 108 x 104 x 163mm (w/h/d) (4-3/8 x 4-1/8 x 6-5/8 in.)
Weight	Approx. 700g (1 lb. 9 oz.) excluding the battery and cassette
Microphone	Electret condenser microphone,

Design and specifications subject to change without notice.

Note: Nikon VN-300 is listed for information purposes only - no longer available.

Nikon VN-500

Product number	8151
Video recording system	Four rotary heads Helical scanning FM system
Audio recording system	Rotary head, FM system
Video signal	NTSC color, EIA standards
Usable cassette	8mm video format cassette
Tape speed	SP: Approx. 1.43cm/sec. (1/16 in./sec.) LP: Approx. 0.72cm/sec. (1/32 in./sec.) (playback only)
Recording time	SP mode: 2 hours (P6-120)
Playback time	SP mode: 2 hours (P6-120) LP mode: 4 hours (P6-120)
Fast forward/rewind time	Approx. 8 min. (P6-120)
Image device	CCD (Charged Coupled Device)
Viewfinder	Electronic viewfinder (black and white)
Lens	Combined 8x power zoom lens f=8.5-68mm, (11/32 to 2-3/4 ins.), f2.0 with macro filter diameter: 37mm (1-1/2 ins.)
Autofocus system	TTL
Color temperature	Automatic, HOLD, INDOOR 3,200 K OUTDOOR 5,800 K
Minimum illumination	4 lux (f2.0)
Illumination range	4 lux-100,000 lux (0.4 to 9,290 footcandles)
Recommended illumination	More than 100 lux (9.3 footcandles)
Aperture control	Automatic
Input and Output Connectors:	
Video input/output	Phono jack, 1 Vp-p, 75 ohms unbalanced sync negative
Audio input	–7.5dBs, input impedance more than 47 kilohms
Audio output	–7.5dBs, (at output impedence 47 kilohms) impedance less than 2.2 kilohms
RFU DC OUT	Special mini jack, 5V DC
Headphones jack	Stereo mini jack
Remote jack	Stereo mini-mini jack
Microphone jack	Minijack, –66dBs, low impedance with 2.5-3V DC output, impedance at 6.8 kilohms
General:	
Power requirements	On battery mounting surface 6.0V (battery pack) 7.5V (AC power adapter) 9.0V (alkaline batteries)
Power consumption	5.3W (camera recording) including the viewfinder
Installation	Vertically, horizontally
Operating temperature	0°C to 40°C (32°F to +104°F)
Storage temperature	–20°C to +60°C (14°F to +140°F)
Dimensions	Approx. 109 x 106 x 183mm (w/h/d) (4-3/8 x 4-1/4 x 7-1/4 in.)
Weight	Approx. 780g (1 lb. 12 oz.) excluding the battery and cassette
Microphone	Electret condenser microphone, stereo type

Design and specifications subject to change without notice.

Note: Nikon VN-500 is listed for information purposes only - no longer available.

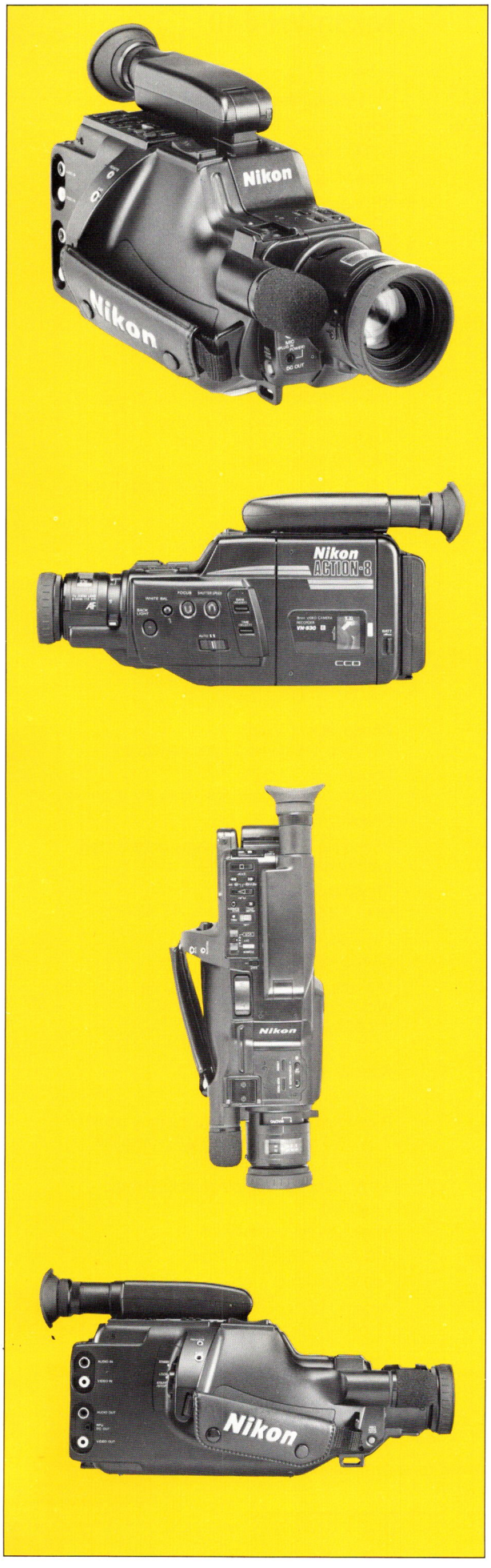

Nikon VN-830

Product number	8004
Video recording system	Rotary two heads. Helical scanning FM system
Audio recording system	Rotary head, FM system
Video signal	NTSC color, EIA standards
Usable cassette	8mm video format cassette
Tape speed	SP: Approx. 1.43cm/sec. LP: Approx. 0.72cm/sec. (playback only)
Recording time	SP mode: 2 hours (P6-120)
Playback time	SP mode: 2 hours LP mode: 4 hours (P6-120)
Fast forward/rewind time	Approx. 6.5 min. (P6-120)
Image device	1/2" CCD (Charged Coupled Device)
Pixels	270,000
Viewfinder	Electronic viewfinder (black and white)
Lens	Combined 6x power zoom lens f–9-54mm, f1.4 with macro Filter diameter: 46mm
Variable Shutter Speeds	1/60, 1/100, 1/250, 1/1000, 1/2000, 1/4000
Auto focus system	TTL
Color temperature	Auto: Hold INDOOR 3,200 K OUTDOOR 5,800 K
Minimum illumination	4 lux
Illumination range	4 lux-100,000 lux
Recommended illumination	More than 300 lux (28 footcandles)
Aperture correction	Automatic, Backlight adjustment
Video output	Phono jack, 1 Vp-p, 75 ohms unbalanced sync negative
Audio output	Phono jack, –7.5dBs, at output impedance less than 2.2 kilohms
RFU DC OUT	Special minijack, 5V DC
Video input	Miniphono jack, 1 Vp-p, 75 ohms unbalanced, sync negative
Audio input	Miniphono jack, –7.5dBs, input impedance more than 47 kilohms
Earphone jack	Minijack, 8 ohm impedance
Remote jack	Stereo mini-minijack
MIC jack	Minijack, –66dBs, low impedance With 2.5-3V DC output, impedance 6.8 kilohms
Microphone power output jack	Special minijack, 5V DC
Power requirements	Battery compartment 6.0V (battery pack)/ 7.5V (AC power adaptor)/9.0V (EBP-55N)
Power consumption	6.9W (camera recording) including the viewfinder
Installation	Vertically, horizontally
Operating temperature	0°C to 40°C (32°F to +104°F)
Storage temperature	–20°C to +60°C (–4°F to +140°F)
Dimensions	Approx. 122 x 153 x 312mm (w/h/d) (4-7/8 x 6-1/8 x 12-3/8 in.) including lens hood
Weight	Approx. 1.2kg (2 lb. 10 oz.) excluding the battery and cassette
Microphone	Electret condenser microphone, omni-directional monaural type

Note: Nikon VN-830 listed for information purposes only–
No Longer Available.

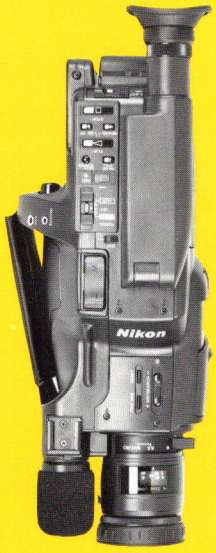

Nikon VN-840

Nikon CONSUMER PRODUCTS DEALER

Product number	8006
Video recording system	Rotary two heads. Helical scanning FM system
Audio recording system	Rotary head, FM system
Video signal	NTSC color, EIA standards
Usable cassette	8mm video format cassette
Tape speed	SP: Approx. 1.43cm/sec. LP: Approx. 0.72cm/sec. (playback only)
Recording time	SP mode: 2 hours (P6-120)
Playback time	SP mode: 2 hours LP mode: 4 hours (P6-120)
Fast forward/rewind time	Approx. 6.5 min. (P6-120)
Image device	1/2" CCD (Charged Coupled Device)
Pixels	270,000
Viewfinder	Electronic viewfinder (black and white)
Lens	Combined 8x power zoom lens f–8.5-68mm, f1.6 with macro Filter diameter: 46mm
Variable Shutter Speeds	1/60, 1/100, 1/250, 1/1000, 1/2000, 1/4000
Auto focus system	TTL
Color temperature	Auto: Hold INDOOR 3,200 K OUTDOOR 5,800 K
Minimum illumination	3 lux
Illumination range	3 lux-100,000 lux (0.4–9,294 footcandles)
Recommended illumination	More than 300 lux (28 footcandles)
Aperture correction	Automatic, Backlight adjustment
Video output	Phono jack, 1 Vp-p, 75 ohms unbalanced sync negative
Audio output	Phono jack, –7.5dBs, at output impedance, less than 2.2 kilohms
RFU DC OUT	Special minijack, 5V DC
Video input	Phono jack, 1 Vp-p, 75 ohms unbalanced, sync negative
Audio input	Phono jack, –7.5dBs, input impedance more than 47 kilohms
Earphone jack	Minijack, 8 ohm impedance
Remote jack	Stereo mini-minijack
MIC jack	Minijack, –66dBs, low impedance With 2.5-3V DC output, impedance 6.8 kilohms
Microphone power output jack	Special minijack, 5V DC
Power requirements	Battery compartment 6.0V (battery pack)/ 7.5V (AC power adaptor)/9.0V (alkaline batteries)
Power consumption	6.9W (camera recording) including the viewfinder
Installation	Vertically, horizontally
Operating temperature	0°C to 40°C (32°F to +104°F)
Storage temperature	–20°C to +60°C (–4°F to +140°F)
Dimensions	Approx. 122 x 153 x 314mm (w/h/d) (4-7/8 x 6-1/8 x 12-3/8 in.) including lens hood
Weight	Approx. 1.2kg (2 lb. 10 oz.) excluding the battery and cassette
Microphone	Electret condenser microphone, uni-directional monaural type

Note: Nikon VN-840 listed for information purposes only–
No Longer Available.

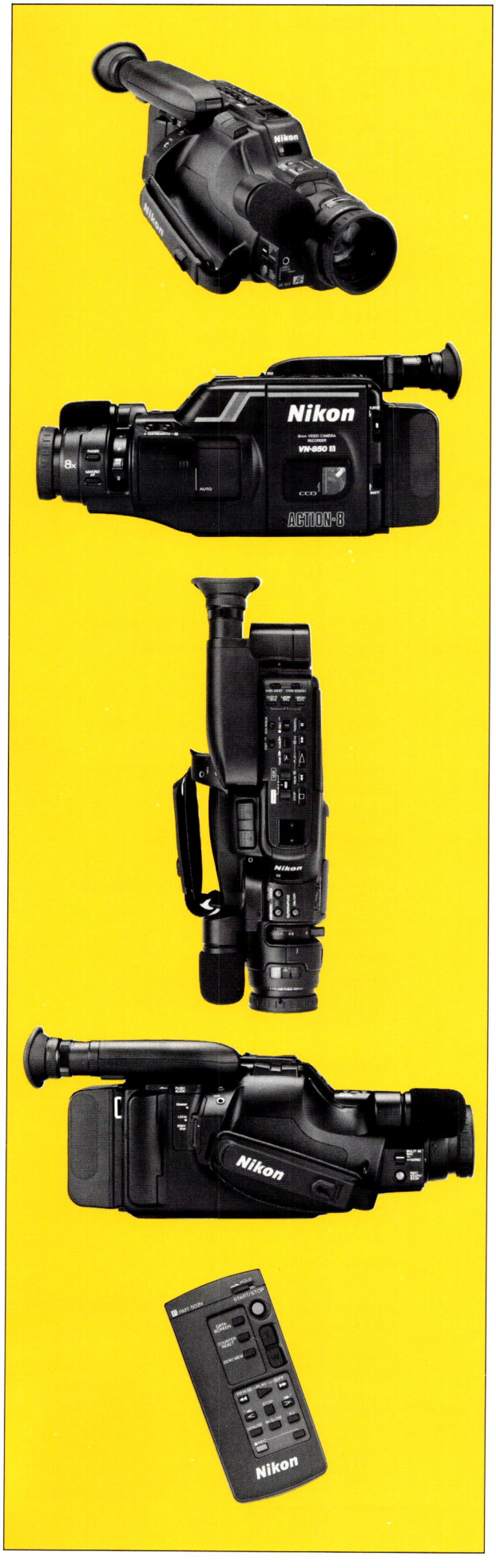

Nikon VN-850

Product number	8009
Video recording system	Rotary two heads. Helical scanning FM system
Audio recording system	Rotary head, FM system
Video signal	NTSC color, EIA standards
Usable cassette	8mm video format cassette
Tape speed	SP: Approx. 1.43cm/sec. LP: Approx. 0.72cm/sec. (playback only)
Recording time	SP mode: 2 hours (P6-120)
Playback time	SP mode: 2 hours LP mode: 4 hours (P6-120)
Fast forward/rewind time	Approx. 6.5 min. (P6-120)
Image device	CCD (Charged Coupled Device)
Pixels	270,000
Viewfinder	Electronic viewfinder (black and white)
Lens	Combined 8x power zoom lens f–8.5-68mm, f1.6 with macro Filter diameter: 46mm
Variable Shutter Speeds	1/60, 1/100, 1/250, 1/1000, 1/2000, 1/4000
Auto focus system	TTL
Color temperature	Auto: Hold INDOOR 3,200 K OUTDOOR 5,800 K
Minimum illumination	2 lux
Illumination range	2 lux-100,000 lux
Recommended illumination	More than 100 lux (9 footcandles)
Aperture correction	Automatic, Backlight adjustment
Video output	Phono jack, 1 Vp-p, 75 ohms unbalanced sync negative
Audio output	Phono jack, –7.5dBs, at output impedance less than 1 kilohms
RFU DC OUT	Special minijack, 5V DC
Video input	Phono jack, 1 Vp-p, 75 ohms unbalanced, sync negative
Audio input	Phono jack, –7.5dBs, input impedance more than 47 kilohms
Earphone jack	Minijack, 8 ohm impedance
Remote jack	Stereo mini-minijack
MIC jack	Minijack, –66dBs, low impedance With 2.5-3V DC output, impedance 6.8 kilohms
Microphone power output jack	Special minijack, 5V DC
Power requirements	On battery mounting surface 6.0V (battery pack) 7.5V (AC power adaptor) 9.0V (alkaline batteries)
Power consumption	6.2W (camera recording) including the viewfinder
Installation	Vertically, horizontally
Operating temperature	0°C to 40°C (32°F to +104°F)
Storage temperature	–20°C to +60°C (–4°F to +140°F)
Dimensions	Approx. 111 x 139 x 319mm (w/h/d) (4-3/8 x 5-1/2 x 12-5/8 in.) including lens hood
Weight	Approx. 1.1kg (2 lb. 3 oz.) excluding the battery and cassette
Microphone	Electret condenser microphone, omni-directional monaural type

VN-850 Wireless Remote Comander (repl.)

Product number	8066
Remote control system	Infrared control
Power requirements	3V DC; 2 size AA batteries
Dimensions	Approx. 57 x 20 x 120mm (w/h/d) (2-1/4 x 13/16 x 4-3/4 in.)
Weight	Approx. 62g (2 oz.) excluding batteries

Nikon VN-900

Product number	8003
Video recording system	Rotary four heads. Helical scanning FM system
Audio recording system	Rotary head, FM system
Video signal	NTSC color, EIA standards
Usable cassette	8mm video format cassette
Tape speed	SP: Approx. 1.43cm/sec. LP: Approx. 0.72cm/sec. (playback only)
Recording time	SP mode: 2 hours (P6-120)
Playback time	SP mode: 2 hours LP mode: 4 hours (P6-120)
Fast forward/rewind time	Approx. 8 min. (P6-120)
Image device	2/3" CCD (Charged Coupled Device)
Pixels	420,000
Viewfinder	Electronic viewfinder (black and white)
Lens	Combined 6x power zoom lens f–12-72mm, f1.6 with macro Filter diameter: 46mm
Variable Shutter Speeds	1/60, 1/100, 1/250, 1/1000, 1/2000, 1/4000
Auto focus system	TTL
Color temperature	Auto: Hold INDOOR 3,200 K OUTDOOR 5,800 K
Minimum illumination	5 lux
Illumination range	5 lux-100,000 lux (0.5–9,294 footcandles)
Recommended illumination	More than 300 lux (28 footcandles)
Aperture correction	Automatic, manual (variable)
Video output	Phono jack, 1 Vp-p, 75 ohms unbalanced sync negative
Audio output	Phono jack, –10dBs, at output impedance less than 2.2 kilohms
RFU DC OUT	Special minijack, 5V DC
Video input	Miniphono jack, 1 Vp-p, 75 ohms unbalanced, sync negative
Audio input	Miniphono jack, –10dBs, input impedance more than 47 kilohms
Earphone jack	Minijack, 8 ohm impedance
Remote jack	Stereo mini-minijack
MIC jack	Minijack, –66dBs, low impedance With 2.5-3V DC output, impedance 6.8 kilohms
Microphone power output jack	Special minijack, 5V DC
Power requirements	Battery compartment 6.0V/7.5V
Power consumption	5.8W (camera recording) including the viewfinder
Installation	Vertically, horizontally
Operating temperature	0°C to 40°C (32°F to +104°F)
Storage temperature	–20°C to +60°C (–4°F to +140°F)
Dimensions	Approx. 106 x 112 x 300mm (w/h/d) (4-1/4 x 4-1/2 x 11-7/8 in.)
Weight	Approx. 0.9kg (2 lb.) excluding the battery and cassette
Microphone	Electret condenser microphone, omni-directional monaural type

Note: Nikon VN-900 listed for information purposes only– No Longer Available.

Nikon VN-910

Product number	8007
Video recording system	Rotary four heads. Helical scanning FM system
Audio recording system	Rotary head, FM system
Video signal	NTSC color, EIA standards
Usable cassette	8mm video format cassette
Tape speed	SP: Approx. 1.43cm/sec. LP: Approx. 0.72cm/sec. (playback only)
Recording time	SP mode: 2 hours (P6-120)
Playback time	SP mode: 2 hours LP mode: 4 hours (P6-120)
Fast forward/rewind time	Approx. 8 min. (P6-120)
Image device	1/2" CCD (Charged Coupled Device)
Pixels	270,000
Viewfinder	Electronic viewfinder (black and white)
Lens	Combined 6x power zoom lens f–11-66mm, f2.0 with macro Filter diameter: 37mm
Variable Shutter Speeds	1/60, 1/100, 1/250, 1,1000, 1/2000, 1/4000
Auto focus system	TTL
Color temperature	Auto: Hold INDOOR 3,200 K OUTDOOR 5,800 K
Minimum illumination	4 lux (f2.0)
Illumination range	4 lux-100,000 lux
Recommended illumination	More than 300 lux
Aperture correction	Automatic
Video input/output	Phono jack, 1 Vp-p, 75 ohms unbalanced sync negative
Audio input/output	Input: Phono jack, –7.5dBs, input impedance more than 47 kilohms Output: –7.5dBs, (at output impedance 47 kilohms) impedance less than 2.2 kilohms
RFU DC OUT	Special minijack, 5V DC
Earphone jack	Minijack, 8 ohm impedance
Remote jack	Stereo mini-minijack
MIC jack	Minijack, –66dBs, low impedance With 2.5-3V DC output, impedance 6.8 kilohms
Microphone power output jack	Special minijack, 5V DC
Power requirements	Battery compartment 6.0V (battery pack)/ 7.5V (AC power adaptor)/9V (alkaline batteries)
Power consumption	5.2W (camera recording) including the viewfinder
Installation	Vertically, horizontally
Operating temperature	0°C to 40°C (32°F to +104°F)
Storage temperature	–20°C to +40°C (–4°F to +104°F)
Dimensions	Approx. 106 x 107 x 176mm (w/h/d) (4-1/4 x 4-1/4 x 7 in.)
Weight	Approx. 790g (1 lb. 12 oz.) excluding the battery and cassette
Microphone	Electret condenser microphone, omni-directional monaural type

Note: Nikon VN-910 listed for information purposes only– No Longer Available.

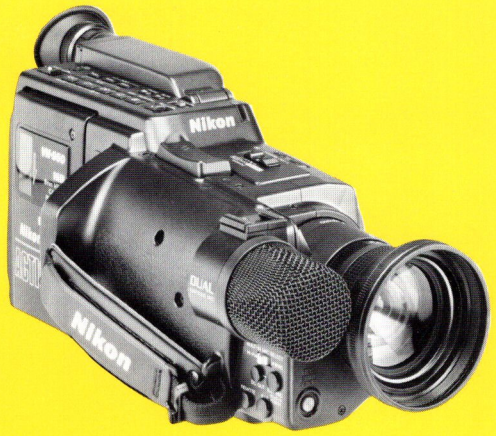

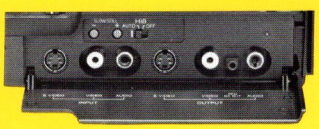

Nikon VN-950

Product number	8100
Video recording system	Rotary two heads. Helical scanning FM system
Audio recording system	Rotary head, FM system
Video signal	NTSC color, EIA standards
Usable cassette	8mm video format cassette
Tape speed	SP: Approx. 1.43cm/sec. LP: Approx. 0.72cm/sec. (playback only)
Recording time	SP mode: 2 hours (E6/P6-120)
Playback time	SP mode: 2 hours LP mode: 4 hours (E6/P6-120)
Fast forward/rewind time	Approx. 7 min. (E6/P6-120)
Image device	2/3" CCD (Charged Coupled Device)
Pixels	420,000
Viewfinder	Electronic viewfinder (black and white)
Lens	Combined 8x power zoom lens f–11-88mm, f1.4 with macro Filter diameter: 52mm
Variable Shutter Speeds	1/60, 1/100, 1/250, 1/1000, 1/2000, 1/4000, 1/10,000
Auto focus system	TTL
Color temperature	Auto/One push white balance INDOOR 3,200 K, OUTDOOR 5,800 K
Minimum illumination	4 lux (f1.4)
Illumination range	4 lux-100,000 lux
Recommended illumination	More than 300 lux (28 footcandles)
Aperture correction	Automatic, manual (variable)
Video output	Phono jack, 1 Vp-p, 75 ohms unbalanced sync negative
S-video output	4-pin mini-DIN Luminance signal: 1 Vp-p, 75 ohms unbalanced, sync negative Chrominance signal: 0.286 Vp-p, 75 ohms unbalanced
Audio output	Phono jack, –7.5dBs, at output impedance less than 2.2 kilohms
RFU DC OUT	Special minijack, 5V DC
Video input	Miniphono jack, 1 Vp-p, 75 ohms unbalanced, sync negative
S-video input	4-pin mini-DIN Luminance signal: 1 Vp-p, 75 ohms unbalanced, sync negative Chrominance signal: 0.286 Vp-p, 75 ohms unbalanced
Audio input	Miniphono jack, –7.5dBs, input impedance more than 47 kilohms
Earphone jack	Minijack, 8 ohm impedance
Remote jack	Stereo mini-minijack
MIC jack	Minijack, –66dBs, low impedance With 2.5-3V DC output, impedance 6.8 kilohms
Microphone power output jack	Special minijack, 5V DC
Power requirements	Battery compartment 6.0V (battery pack)/ 7.5V (AC power adaptor)/9.0V (EBP-55N)
Power consumption	7.6W (camera recording) including the viewfinder
Installation	Vertically, horizontally
Operating temperature	0°C to 40°C (32°F to +104°F)
Storage temperature	–20°C to +60°C (–4°F to +140°F)
Dimensions	Approx. 126 x 136 x 352mm (w/h/d) (5 x 5-3/8 x 13-7/8 in.) including lens hood
Weight	Approx. 1.5kg (3 lb. 5 oz.) excluding the battery and cassette
Microphone	Electret condenser microphone

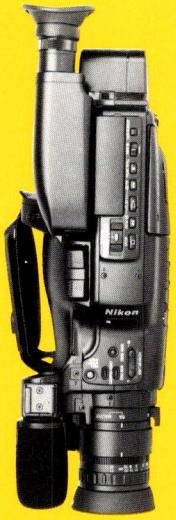

Nikon VN-960

Product number	8101
Video recording system	Two rotary heads Helical scanning FM system
Audio recording system	Rotary head, FM system (2 channels)
Video signal	NTSC color, EIA standards
Usable cassette	8mm video format cassette
Tape speed	SP: Approx. 1.43cm/sec. (1/16 in./sec.) LP: Approx. 0.72cm/sec. (1/32 in./sec.) (playback only)
Recording time	SP mode: 2 hours (E6/P6-120)
Playback time	SP mode: 2 hours (E6/P6-120) LP mode: 4 hours (E6/P6-120)
Fast forward/rewind time	Approx. 7 min. (E6/P6-120)
Image device	CCD (Charged Coupled Device)
Viewfinder	Electronic viewfinder (black and white)
Lens	Combined 8x power zoom lens f–8.5-68mm, f1.4 with macro Filter diameter: 46mm
Autofocus system	TTL
Color temperature	Auto, one push white balance, INDOOR 3,200 K, OUTDOOR 5,800 K
Minimum illumination	3 lux (f1.4)
Illumination range	3 lux-100,000 lux (0.3 to 9,294 lux)
Recommended illumination	More than 100 lux (9 footcandles)
Shutter speed control	1/60 to 1/10,000 (27 steps)
Aperture control	Auto/manual (16 steps)
Gain control	Auto/manual (8 steps)
Input and Output Connectors:	
Video input/output	Phono jack, 1 Vp-p, 75 ohms unbalanced sync negative
S video input/output	4-pin mini-DIN, Luminance signal: 1 Vp-p. 75 ohms, unbalanced, sync negative Chrominance signal: 0.286 Vp-p. 75 ohms, unbalanced
Audio input	Phono jacks (2: stereo L and R), –7.5dBs, input impedance more than 47 kilohms
Audio output	Phono jacks (2: stereo L and R), –7.5dBs, at 47 kilohms input impedance, impedance less than 1 kilohm
RFU DC OUT	Special mini jack, 5V DC
Headphones jack	Stereo mini jack, 8 ohm impedance
Remote jack	Stereo mini-mini jack
Microphone jack	External stereo microphone jack: minijack, –66dBs, low impedance with 2.5-3V DC, output impedance 6.8 kilohms
Microphone power output jack	Special minijack, 5V DC
General:	
Power requirements	On battery mounting surface 6.0V (battery pack) 7.5V (AC power adaptor) 9.0V (alkaline batteries)
Power consumption	6.7W (camera recording) including the viewfinder
Installation	Vertically, horizontally
Operating temperature	0°C to 40°C (32°F to +104°F)
Storage temperature	–20°C to +60°C (–4°F to +140°F)
Dimensions	Approx. 105 x 137 x 341mm (w/h/d) (4-1/4 x 5-1/2 x 13-1/2 in.)
Weight	Approx. 1.2kg (2 lb. 10 oz.) excluding the battery and cassette
Microphone	Electret condenser microphone, Uni-directional, stereo type

Design and specifications subject to change without notice.

Note: Nikon VN-960 is listed for information purposes only - No longer available.

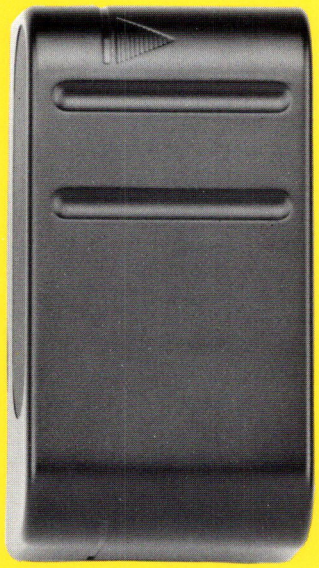

Rechargeable Battery Packs

	NP-77H	NP-55
Product number:	8034	8030
Battery:	Nicad	Nicad
Output:	6V DC	6V DC
Capacity:	2.4 Ah	1.0 Ah
Operating temp:	0°C to 40°C (32°F to 104°F)	0°C to 40°C (32°F to 104*F)
Dimensions:	48x36x89.5mm (w/h/d) (1-15/16x1-7/16x3-5/8")	46x18.5x89.5mm (w/h/d) (1-13/16x3/4x3-5/8")
Weight:	300g (11 oz.)	150g (5.3 oz.)
Charging time:	Two hours 20 minutes with AC-10	One hour with AC-10

Note: Battery Packs NP-77H and NP-55 should be charged completely before using.

	N-66H
Product number:	8045
Battery:	Nicad
Output:	6V DC
Capacity:	1800 mAh
Operating temp:	0°C to 40°C (32°F to 104°F)
Dimensions:	48x42x89.5mm (w/h/d) (1-7/8x1-5/8x3-5/8")
Weight:	280g (8.9 oz.)
Charging time:	One hour 40 minutes with AC-V55N/V35N/V60N AC Adaptor

Note: Battery Pack N-66H should be charged completely before using.

Nikon "AA" Battery Case EBP-N55

Product number: 8053

Special features:

- Enables you to use 6 "AA" batteries to power Nikon 8mm camcorders
- Operates VN-820, VN-830, VN-900, VN-950, HVL-10 DN Video Light
- Batteries not included

Nikon DC-V30N Video Battery Automobile Charger

Product number: 8059

Special features:

The DC-V30N charger plugs into the cigarette lighter socket of a car to:

- Charge an NP-55 or NP-77H battery pack
- Power Nikon Camcorder directly using AC battery adaptor
- Charges an NP-55 in one hour or NP-77H in two hours

Power consumption:	20w
Power requirements:	12/24 v DC
Output voltage:	DC out; 7.5V, 1.6A in operating mode Battery charge terminal; 10V, 1.3A in charge mode
Battery:	NP-55, NP-77H or similar
Operating temp:	0°C to 40°C (32°F to 104°F)
Storage temp:	–20°C to 60°C (–4°F to 140°F)
Dimensions:	67x39x138mm (w/h/d) (2-3/4x1-1/2x5-1/2")
Weight:	310g (11.1 oz.)

(Design and specifications subject to change without notice.)

Nikon Video Light HVL-10DN

Product number: 8056

Special features:
- Attaches to camcorder accessory shoe
- Operates with NP-55: 30 min., NP-77H: 60 min.
- 10W Halogen lamp (XB-10D)
- 3000°K

Nikon Video Tele-Conversion Lens VCL-1446BN

Product number: 8057

Special features:
- Increases focal length of zoom lens by 1.4X
- 46mm Ø, case supplied
  Fits VN-820, VN-830, VN-900

Lens power: - 1.4

Lens structure: - 2 groups, 2 elements

Screw thread for video camera recorder lens: - 46mm Ø

Screw thread for filter: - 58mm Ø

Dimensions: - 61mm dia. x 28.5mm

Weight: - 132.5g (6.7 oz.) excluding the caps

Accessories supplied: - Carrying case (1)

Nikon Video Wide-Conversion Lens VCL-0746BN

Product number: 8058

Special features:
- Widens focal length of zoom lens by .7X
- 46mm Ø, case supplied
  Fits VN-820, VN-830, VN-900

Lens power: - 0.7

Lens structure: - 2 groups, 2 elements

Screw thread for video camera recorder lens: - 46mm Ø

Screw thread for filter: - 58mm Ø

Dimensions: - 61mm dia. x 39mm

Weight: - 117.5g excluding the caps

Accessories supplied: - Carrying case (1)

(Design and specifications subject to change without notice.)

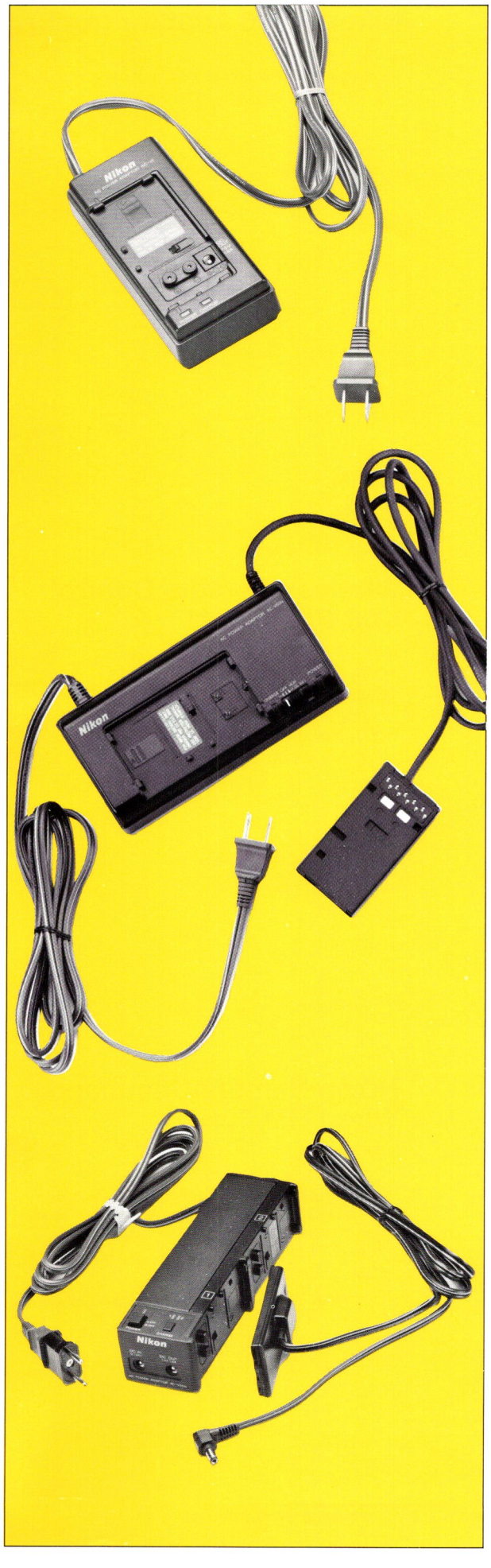

Nikon AC10 Power Adaptor (repl.)

Product number:	8032
Special features:	- Charges an NP-55 battery pack in one hour or NP-77H battery pack in two hours - Supplies power to camcorder via AC connecting cord
Power consumption:	- 20w
Power requirements:	- 100-240V AC; 50/60 Hz
Output voltage:	- DC OUT 7.5V, 1.6A in operating mode - Battery charge terminal; 10V, 1.3A in charge mode
Application:	- Nikon battery pack NP-55 or NP-77H
Operating temp:	- 0°C to 40°C(32°F to 104°F)
Storage temp:	- –20°C to 60°C (–4°F to 140°F)
Dimensions:	- 67x39x138mm (w/h/d) (2-3/4x1-1/8x5-1/2") - Including projecting parts and controls
Weight:	- 310g (11 oz.)
Supplied accessories:	- 1–Connecting cord

Nikon AC Power Adaptor AC-V60N (repl.)

Product number:	8067
Power consumption:	- 20w
Power requirements:	- 100-240V AC; 50/60 Hz
Output voltage:	- DC OUT 7.5V, 1.6A in operating mode - Battery charge terminal; 10V, 1.3A in charge mode
RFU DC OUT:	- Special minijack, 5V DC
Output connectors:	- Video; Phono jack, 1Vp-p, 75 ohm unbalanced, sync negative - Audio; Phono jack, –7.5 dBs. Output impedance: less than 1k ohm
Application:	- Nikon battery pack NP-55, N-66H or NP-77/77H
Operating temp:	- 0°C to 40°C(32°F to 104°F)
Storage temp:	- –20°C to 60°C (–4°F to 140°F)
Dimensions:	- 170x41.6x82mm (w/h/d) (6-3/4x1-11/16x3-1/4") - Including projecting parts and controls
Charging time:	- Approximate time (in minutes): NP-66H: 100 NP-77H: 140 NP-77: 120 NP-55: 60
Weight:	- 750g (20 oz.)

Nikon AC Power Adaptor AC-V55N

Product number:	8052
Special features:	- Charges an NP-55 battery pack in one hour or NP-77H battery pack in two hours - Can charge both batteries simultaneously - Adapts camcorder to AC usage via AC plug adaptor (included) - Batteries not included
Power consumption:	- 26w
Power requirements:	- 100-240V AC; 50/60 Hz - DC IN 12/24V
Output voltage:	- DC OUT 7.5V, 1.6A - Battery charge terminal; 10V, 1.3A
Application:	- Nikon battery pack NP-55 or NP-77H
Operating temp:	- 0°C to 40°C(32°F to 104°F)
Storage temp:	- –20°C to 60°C (–4°F to 140°F)
Dimensions:	- 60x47x195mm (w/h/d) (2-3/8x1-7/8x7-3/4") - Including projecting parts and controls
Weight:	- 600g (1 lb. 5 oz.)
Supplied accessories:	- 1–AC plug adaptor (with U.S.A. model only) - 1–Connecting cord

(Design and specifications subject to change without notice.)

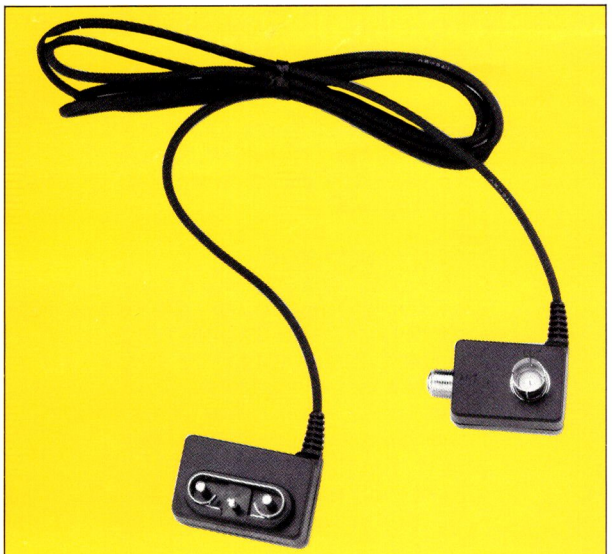

Nikon RF10 Adaptor (repl.)

Product number: 8069

Special features:

- Facilitates connection to playback of camcorder to TV without audio/video connectors

Wireless Remote Control Unit RM-152KN

Product number: 8054

Special features:

- Consists of RMR-152N receiver and Rmt-151AN remote commander
- Controls "VCR" function of Nikon camcorders up to 23 feet
- Requires 2 "AA" batteries (included)
- Operates VN-820, VN-830, VN-900, VN-950

Nikon Remote Commander, Wired RM-95N

Product number: 8055

Special features:

- Operates either camera (VN-900, VN-950), or VCR function including: zoom, focus, record, edit search, data screen, counter reset, rewind, fast forward, play, pause, slow motion, frame by frame playback
- Cable length 5m (16 ft. 4-7/8")
- Operates VCR functions of VN-820, VN-830

(Design and specifications subject to change without notice.)

Nikon AS-10 Antenna Switch (repl.)

Product number: 8061

Special features:
- Facilitates playback to TV without audio/video input connectors

Nikon Lens Cap/Hood (repl.)

Product number: 8062

Special features:
- 46mm Ø
- For VN-820, VN-830, VN-840, VN-850, VN-900

Nikon Mini Phono Cord (repl.)

Product number: 8063

Special features:
- Audio/video cable (miniphones to 2 phono)

Nikon Title Holder (repl.)

Product number: 8064

Special features:
- Supplied with VN-820, VN-800, VN-950
- Holds titles and slides

(Design and specifications subject to change without notice.)

Nikon Video Compartment Case

Product number: 8028

Special features:
- Lightweight and rugged design
- Wide shoulder strap padded for protection
- Multi compartments
- For VN-820, VN-830, VN-840, VN-850, VN-900

Nikon VN-950 Video Compartment Case

Product number: 8029

Special features:
- Lightweight and rugged design
- Wide shoulder strap padded for protection
- Multi compartments
- For VN-950

Nikon NS-1 Strap

Product number: 673

Special features:
- Wide comfortable strap for easy carrying of Nikon camcorder or cameras

(Design and specifications subject to change without notice.)