$2.00

Photography with Large-Format Cameras

O-18

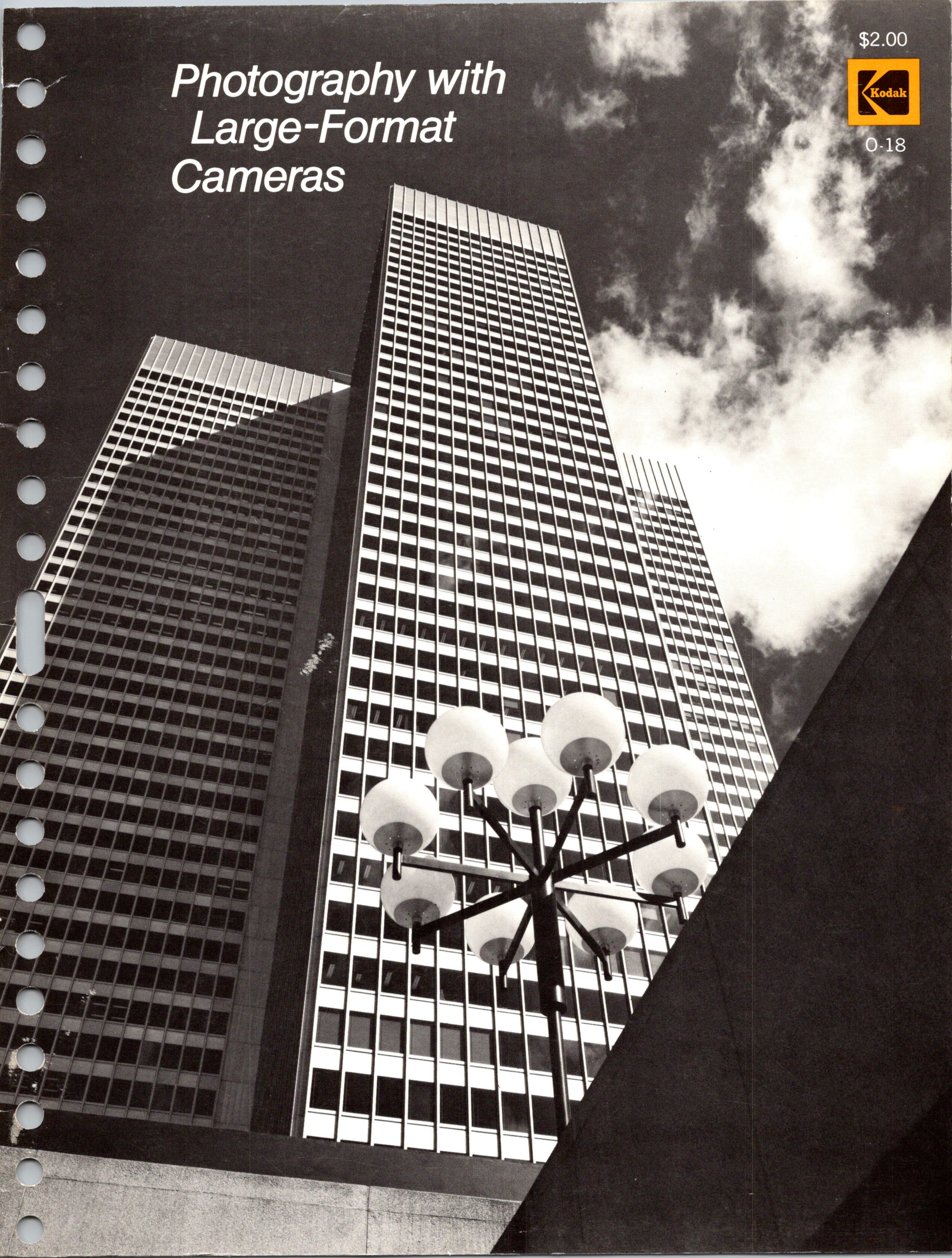

PHOTOGRAPHY WITH LARGE-FORMAT CAMERAS

First Edition 1973

ISBN 0-87985-066-3

Punched to fit the
Kodak Technical Information
Binder, W-4. ▶

INTRODUCTION

This first edition of *Photography with Large-Format Cameras* replaces an earlier Data Book entitled *Camera Technique for Professional Photographers.* Much of the material from the former book has been retained in the new one, but the discussions have been amplified and some new material about visual perception and perspective has been added. These matters are important in most branches of photography, but they become more so when distortion must be corrected or counter-distortion introduced to make the picture accord with what the mind sees in the subject, or when special effects are created.

In this book, there is no intention to state a special case for large negatives as opposed to smaller ones. Cameras are tools that the photographer uses as he sees fit and, like any craftsman, he chooses the tool that best serves his immediate purpose. Each type of camera has limitations which must be considered before the choice is made.

In professional photography today, there are two separate techniques of picture taking. One is used in advertising and illustrative work; spontaneity is the keynote. Graininess, multiple images, and a general lack of fine detail, as well as exaggerated perspective are all used to create impressions. In this kind of photography, information content of the picture is deliberately reduced so that the observer does not pause to study it carefully. If his interest is caught only momentarily, the photograph has served its purpose.

In the other technique, the photographer directs his attention towards providing the best representation of the subject or the highest information and detail content. In many cases, the large-format camera is the most suitable tool for this purpose. Just as the photographer studies the subject to be photographed with care and forethought, so the observer studies the result and extracts from it the information he needs or the artistic satisfaction that it affords.

At first sight, negative size, or format, might seem to be merely a question of size and its influence on the end result rather subtle. This is not so, however, the influence of negative size is felt throughout a whole photographic system and raises several questions of considerable importance in professional work. These questions include such matters as image quality—sharpness, detail, and graininess—cost of production, and the availability of various lenses, as well as the feasibility of operating the camera under adverse conditions. Moreover, the darkroom equipment needed to print and process large negatives is different from that needed for the smaller sizes.

Photography with Large-Format Cameras is intended mainly as an introduction to the subject for students and others whose photographic experience has been confined to the use of small cameras. Although the adjustments—swings and tilts —found on a view camera constitute one of the main reasons for using it, the concept of large-format photography is broader than might be expected at first sight. The whole procedure is one of preparation and forethought; this is not to say that preparation and forethought are not required in other kinds of photography, but in view-camera work it is invariably so.

In this book, several subjects are discussed that are related to, but by no means used exclusively in, large-format photography. The section on the use of filters, for example, has been included because there is more likelihood of filters being used when the photographer has time to consider the various effects that can be obtained with filters. The sections on cameras and lenses are of a general nature. In fairness to all manufacturers, specific brands are not mentioned. Also included are discussions about small-object photography, portraiture, the photography of large groups and, of course, large-format technique. At the end of the book, a collection of simple optical formulas is given.

LARGE-FORMAT CAMERAS

The term "view camera" is generally taken to mean a medium-to-large-format camera used in the type of work described in this book. The terms "technical camera" and "stand camera" are also encountered. Studio cameras for formal portraiture are of the large-format type, but they are generally mounted on a heavy, wheeled stand for limited movement within a studio. View cameras are practically always used mounted on a tripod or some other kind of rigid stand.

The principal features that set the view camera apart from others are the availability of the adjustments described on page 24, and the method of focusing and composing the reversed image by means of a ground-glass screen at the back of the camera.

The large formats in general use are from 4 x 5 inches to 8 x 10 inches. Cameras that take 11 x 14-inch film are available for special purposes. Cameras that take 2¼ x 3¼-inch film are also available, but again these are special-purpose instruments. Serious large-format work is generally undertaken with cameras whose minimum format is 4 x 5 inches, because it is somewhat difficult to assess the results of camera adjustments on a smaller format, and because the work is tiring to the eyes. If negatives smaller than 4 x 5 inches are desirable, they can be made on a larger camera by using interchangeable camera backs or roll-film adapters.

Types of View Cameras

Although the main concept of the view camera has not changed much since the early days of photography, many refinements and improvements have taken place. Lenses have been improved in both speed and quality, and more different types of lenses are available. The standard, flat-bed view camera is still available in various sizes. They are fine cameras for those who prefer to work with them. However, the modern trend is towards the monorail design, which has inherently greater versatility. As the term monorail implies, these cameras have a base consisting of a single member, which may be of tubular or square section. This design permits of interchangeable components, such as lens standards, camera backs, bellows, and base or rail lengths. Thus, a monorail view camera constitutes a system that allows the photographer to put together the components for a camera that best suits his immediate requirements. Moreover, with several different camera backs in the system, the photographer can choose the format most suitable for the particular job.

Choosing a View Camera

Clearly, the choice of a camera must be based on your own particular circumstances. If all you in-

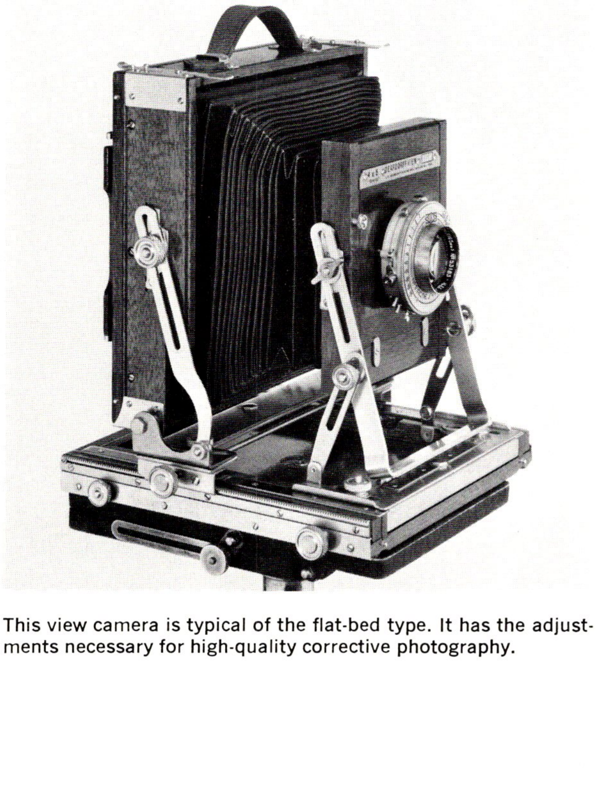

This view camera is typical of the flat-bed type. It has the adjustments necessary for high-quality corrective photography.

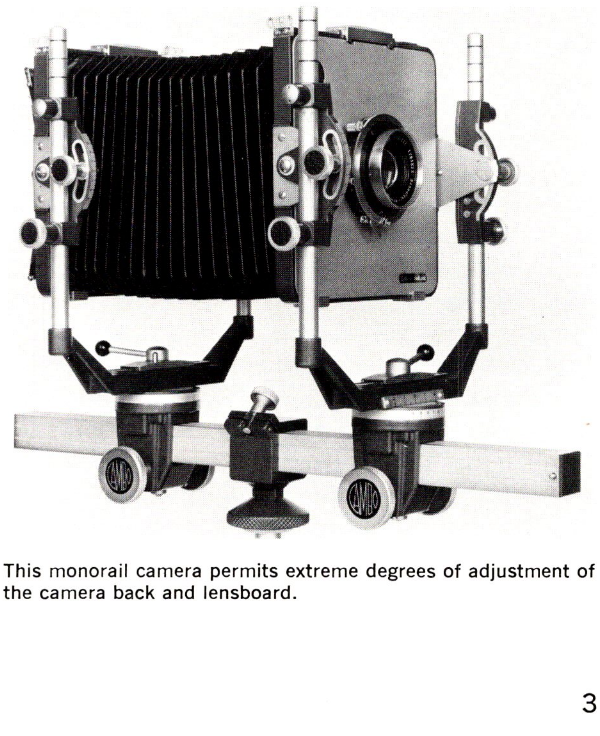

This monorail camera permits extreme degrees of adjustment of the camera back and lensboard.

tend to do is an occasional large-format job, as might be the case in a small studio, it would be uneconomical to invest in a camera system such as that described in the preceding section. In this situation, a reasonably priced 4 x 5-inch camera with several lenses of different focal length would enable you to undertake most of the assignments that call for the use of a large format. In this connection, remember that a camera having a normal-length bellows cannot always be used with an ultra wide-angle lens, because the bellows can't be compressed sufficiently to give the necessarily short lens-to-film distance. Sometimes, the difficulty can be overcome by resorting to a recessed lensboard that brings the lens closer to the film. However, cameras with special bellows for wide-angle work are obtainable, and in some cases, separate wide-angle bellows are sold as an accessory.

If you propose to undertake a wide variety of large-format work to include product photography of all kinds, architectural work, interiors of buildings, a variety of industrial photography, as well as close-up work, a more versatile camera system with a good selection of lenses will be needed. Assignments of this kind often call for the high quality of 8 x 10-inch color transparencies.

Then, consider the cost. Clearly, it would be uneconomical to buy an expensive camera if you were to use it only once a month, for example. In this situation, if an inexpensive model is not adequate for your purpose, consider renting the camera you prefer for those assignments on which it is needed.

Determine the size of negative or transparency you will need to make. If you often have to carry the outfit, choose the lightest and smallest one that will do the work adequately. Otherwise, don't restrict yourself to the smallest format, because different sizes of camera back can be used on an 8 x 10-inch camera. Remember, however, that the larger the format the more expensive, less plentiful, and heavier are the lenses that cover it. Moreover, the size of the negative is felt throughout your processing and printing system. For example, if you produce 8 x 10-inch negatives, you need a similar size enlarger to accommodate them.

Another factor that enters into using the larger formats is exposure time. The depth of field with the long focal-length lenses needed to cover, say, an 8 x 10-inch film is shallow. In stopping the lens down to increase the depth of field, a correspondingly longer exposure is needed. In some situations, this limitation might cause difficulty when you photograph moving parts of machinery, operators at work, or anything else that requires fast shutter speed. Since jobs of this kind are often photographed on location, you may or may not have adequate light to get sufficient exposure.

Do not invest in an 8 x 10-inch camera and a battery of expensive lenses to go with it unless you are certain that the limited, but essential, advantages of this format will be required by the work you are going to do. In general, the work that requires an 8 x 10-inch negative or transparency is in some high quality advertising photography, catalog work where transparencies are made with specified image sizes for the "cut and butt" technique, and the highest quality portraiture. Almost without exception, this work will be in color. There is little, if any, reason to use the largest negatives in black-and-white photography unless your intention is to make contact prints of usable size. A 4 x 5-inch black-and-white negative properly made will yield results adequate for practically all photographic purposes. Moreover, there are many advantages to be gained by using this size negative,

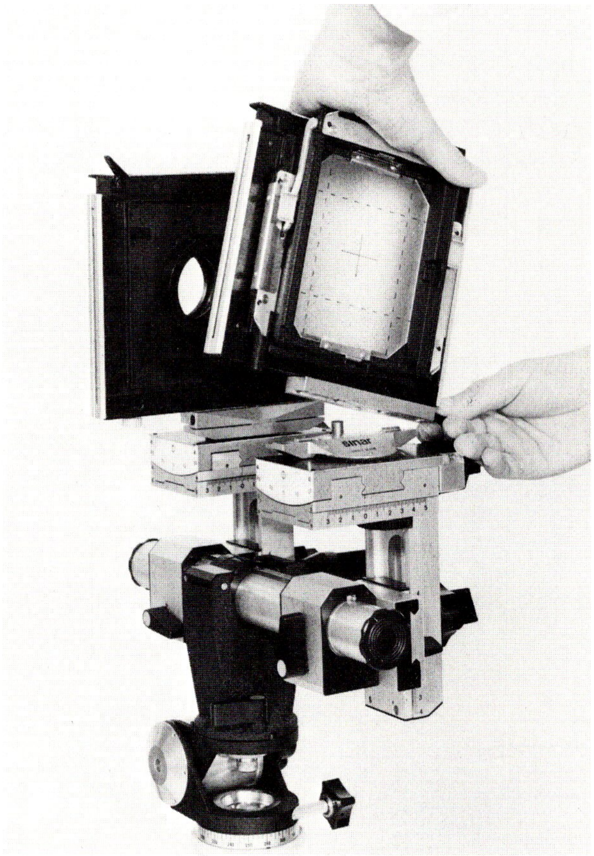

With this monorail camera, backs of different sizes can be interchanged, so that the negative size can be chosen to suit a particular situation.

Product photography of this kind is usually done with a large-format camera.
The above picture was made with a 4 x 5-inch camera.

among which are cost of lenses and material, portability, length of exposure, availability of suitable lenses, and the greater depth of field given by lenses that cover this format.

Two exceptions to the foregoing remarks are in high-quality portraiture where the large negative is easier to retouch without the work becoming visible on an enlargement, and in mural work where the largest negative is desirable, but not essential. Probably there are other situations in which an 8 x 10-inch negative would be necessary, but the decision can be made only when all the details of the particular job are known.

Shutters

The shutters generally used with view cameras are either those situated between the elements of the lens or as a separate unit behind the lens. As far as efficiency is concerned, there is little to choose between the two types, but for ease of setting the behind-the-lens type is preferable. Moreover, if several lenses are used, a single shutter behind the lens eliminates any possible variations that might exist among several between-the-lens types.

The efficiency of a shutter is expressed as a percentage of the light actually transmitted during a given exposure time as compared with that transmitted if the shutter were fully open for the whole exposure time. The efficiency of blade-type shutters varies with the exposure time and the lens aperture. This is because however rapidly the shutter operates, it takes a measurable time for the blades to uncover the lens completely, and in closing, they take a measurable time to cover the lens again. The result of this differential is that the center of the format receives more exposure than the edges. Therefore, at small lens apertures a film receives slightly more exposure than it would at maximum aperture. However, the efficiency of blade-type shutters is at its lowest at high speeds and large lens apertures. In large-format photography, where small apertures and low shutter speeds are usual, the practical result of the effects just described is a tendency towards overexposure, but if the photographer is aware of the situation, he can make compensations by means of practical exposure tests.

In exposing black-and-white films, which generally have a considerable tolerance to overexposure, the question of shutter efficiency is not serious, but in exposing color transparency films, which have very little latitude to overexposure, the effect might be detrimental to the results if suitable corrections are not applied.

Ease of setting is a feature of this behind-the-lens shutter.

LENSES FOR LARGE-FORMAT CAMERAS

Every increase in the size of the negative exerts an influence on the whole of a photographic system. Probably, this influence is felt most strongly in considering the question of lenses. As the size of the format increases, so must the covering power of the lens increase, and in a broad sense, the focal length of the lens must be greater as well.

Because of the complexity of design and manufacture, as well as size, weight, and cost, the choice of fine quality lenses that cover large formats is comparatively restricted. A fairly good selection of lenses is available for the 4 x 5-inch format, but as the negative size increases, the choice becomes more limited. Also, because of the difficulty in manufacturing large-aperture lenses with a minimum of residual aberrations, lenses for large-format work generally have relatively small maximum apertures. Moreover, such lenses are generally stopped down to a comparatively small aperture in use, because the longer the focal length, the shallower the depth of field at a given aperture, except when the magnification is equal.

The following discussion about lenses is a brief one; the intention is merely to give the reader who is not acquainted with the subject some information as it relates to large-format photography.

Focal Length

This is the property of a lens that determines the size of the image of an object placed at a given distance from the lens. We are accustomed to thinking of the focal length as the distance—in inches or millimeters—from the lens to the focal plane or film. For a simple, single-element lens this is a fair approximation, but for more complex lenses the measurement is taken from a point, known as the rear nodal point, to the focal plane.

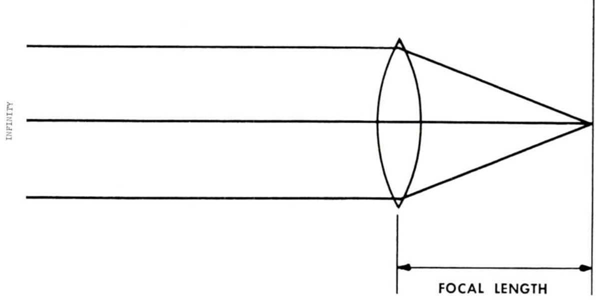

The longer the focal length, the larger the image of an object at a given distance will be. The relationship between focal length and image size is a simple one: If a 1-inch focal-length lens is focused on an object 6 feet high at a distance of 25 feet, the image on the film will be about ¼ inch high. If a 2-inch lens is used, the image will be twice as high, a 6-inch lens yields an image 6 times as high, and so on. In this connection, remember that lenses of the same rated focal length are rarely exactly the same, but the focal length engraved on the lens mount is generally correct within 1 percent.

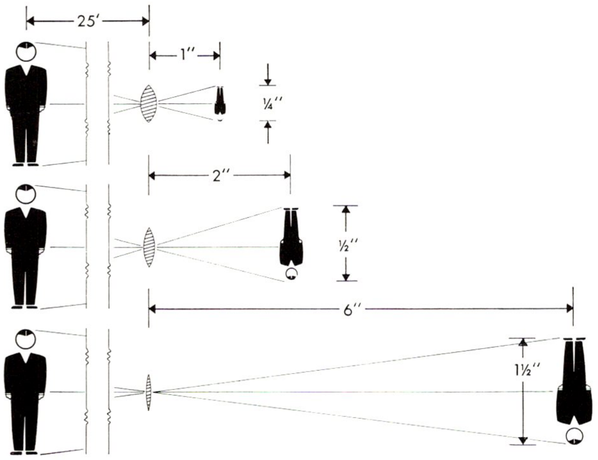

The relationship between focal length and image size is illustrated by this drawing.

Although lenses that cover large negatives have longer focal lengths than those normally used for small formats, there is no direct relationship between focal length and the covering power of lenses. For example, a 6-inch telephoto lens for 16mm motion pictures, a 6-inch "normal" lens for a 4 x 5 camera, and a 6-inch wide-angle lens for an 8 x 10-inch view camera all give the same size image of an object placed at the same distance from the lens. The differences among the three lenses are those of covering power or angular field.

Covering Power

Every lens projects a circular field called the circle of illumination. With a lens of given focal length, this circle is limited in size by vignetting of oblique rays of light by the edges of the lens barrel and by the particular design of the lens. With most lenses, there is a somewhat smaller circle of acceptable definition within the circle of illumination. This smaller circle increases as the lens is stopped down. When the negative fits into the circle of acceptable definition, the lens is said to cover that

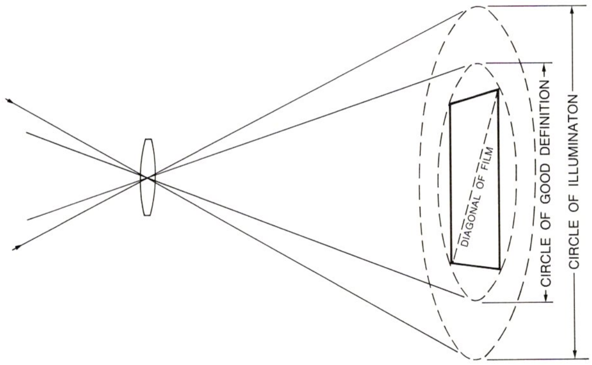

size of negative. In other words, for good coverage the diagonal of the negative must be at least equal to the diameter of the circle of acceptable definition.

In speaking of covering power, it is assumed that the lens is focused on a distant object, but as the lens-to-object distance becomes much shorter and the lens-to-film distance greater, the circle of acceptable definition increases correspondingly. Thus, a lens used for close-up work might cover a much larger film area. For example, a 4-inch lens designed to cover a 2½ x 3¼-inch format when focused at infinity, would cover a 6½ x 9½-inch format if the subject were only 6 inches from the lens. Thus a lens of lesser covering power or of shorter focal length than normal can often be used in close-up photography. Remember, however, that camera lenses generally do not give their best performance at short lens-to-subject distances. For critical close-up work, a macro lens designed for short lens-to-object distances is more satisfactory.

Covering Power with Swings and Tilts

In using view-camera adjustments, the question of covering power in relation to focal length of lenses becomes one of importance. This is because several of these adjustments involve moving the center of the format away from the lens axis. Consequently, with a lens of minimal covering power, the corners of the image may be outside the circle of best definition or even outside the circle of illumination. For example, if the rising-front movement is used, the circle of illumination is raised in relation to the film and the bottom corners of the negative may be unsharp or poorly illuminated, or both.

This example indicates, of course, that lenses used in conjunction with swings and tilts must have greater covering power than those whose circle of best definition just equals the negative diagonal. In general, the best quality lenses do meet this requirement, particularly when they are stopped down to an intermediate aperture.

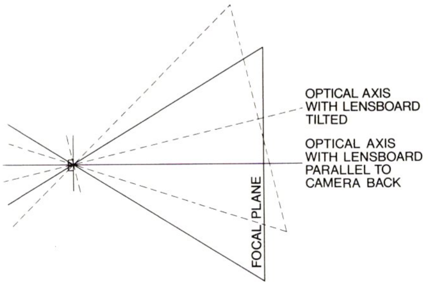

Tilting or swinging the lensboard throws the optical axis off center, and thus places the top, bottom, or one side of the film close to, or partially outside, the field of the lens. Consequently, a lens with extra covering power is needed when these adjustments are used.

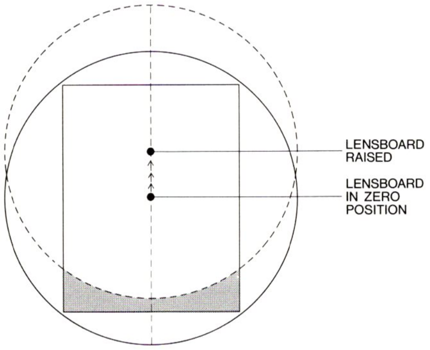

If the lens has minimal covering power, use of the vertical or horizontal movements of the lensboard will result in vignetting. In the drawing above, the shaded area shows how this vignetting occurs when the vertical movement is used. If the drawing is turned sideways, the effect would be that of moving the lensboard horizontally from the central, or zero, position.

The use of view-camera adjustments often requires a lens with covering power greater than that considered normal for the format.

When the center of the format is displaced a long way from the lens axis, it is often necessary to use what is known as a wide-field lens. This is a lens of normal focal length for a particular format, but it throws a much larger circle of acceptable definition than a normal lens. In fact, the circle of acceptable definition is almost as large as the circle of illumination. This feature permits the full use of camera adjustments without resorting to a lens of longer focal length; a procedure which is not always possible if space is limited, and not always desirable when a certain relationship of size and position of objects in the picture is required.

Evenness of Illumination

When negatives are examined critically, practically all of them will be found more dense in the center than at the edges. This is due, of course, to the greater intensity of light at the center than at the perimeter of the circle of illumination. To some extent this effect is common to all lenses, but it is particularly noticeable with wide-angle and wide-field lenses. In other words, the fall-off in illumination is greater as the covering power of the lens increases.

There are two unrelated reasons why less light is transmitted to the edges of the circle of illumination than to the central area. One reason is vignetting of oblique rays of light by the lens barrel. In good-quality lenses, vignetting is reduced to the minimum by design and it disappears as the lens is stopped down. The other reason is connected with certain optical phenomena which are unrelated to lens design. For the purpose of this discussion, it is sufficient to say that this effect will be noticeable in negatives made with lenses having a wide angular field. In some situations it may be necessary to increase the calculated exposure to avoid loss of shadow detail at the corners of the picture. Even density in the print can then be obtained by printing-in or burning-in the denser central area of the negative. Also, some manufacturers offer correcting filters which offset unevenness of illumination.

Lens Aperture

Practically all modern camera lenses have an iris diaphragm for changing the size of the aperture that admits light. The intensity of illumination that reaches the film is proportional to the area of the diaphragm opening and is independent of the focal length. This is true for any lens, but it holds strictly only when the image is in focus on the film. For normal lenses, the *f*-number for any size of diaphragm opening is found by dividing the focal length of the lens by the diameter of the aperture. The following example illustrates the point that image brightness at a given aperture is independent of focal length: A 12-inch lens has a 3-inch diameter aperture at *f*/4; a ½-inch focal length motion-picture lens has a ⅛-inch diameter aperture at the same *f*-number, yet they both form images of equal brightness at the same aperture, provided that the aperture is circular. In practical photography, this rule holds for modern lenses with antireflection coatings, but with some older, uncoated lenses and dusty or dirty lenses, light transmission will be reduced. Other things being equal, such lenses will yield thinner, less contrasty negatives at a given aperture than clean, coated lenses.

f-Numbers

For most practical purposes, the *f*-numbers engraved on the aperture ring or on the lens barrel represent successive decreases of one-half in light intensity at the film surface as the lens is stopped down. Although a different series of numbers will be found on some older lenses, the following scale of *f*-numbers is marked on practically all modern camera lenses: *f*/1.4, *f*/2, *f*/2.8, *f*/4, *f*/5.6, *f*/8, *f*/11, *f*/16, *f*/22, *f*/32, *f*/45, and *f*/64. The complete range will not, of course, be marked on any one lens. Standard focal-length lenses designed to cover large formats do not usually have maximum apertures greater than *f*/4. Wide-angle lenses that cover formats such as 4 x 5 inches or larger generally have smaller maximum apertures. This is because of the extreme difficulty in correcting aberrations in wide-angle and wide-field lenses generally. Moreover, the maximum angle of view of which these lenses are capable can be realized only when they are stopped down to a relatively small aperture.

Exposure Correction for Extended Bellows

When the subject is closer than eight times the focal length of the lens, the *f*-stop system no longer indicates the effective aperture. As the lens-to-subject distance becomes shorter, the lens-to-film distance becomes correspondingly longer, and so the illumination on the film becomes less. To avoid underexposure in close-up photography, therefore, it is necessary to compensate for the reduced illumination. The simplest way to make the correction is to use the Effective Aperture Computer in the *KODAK Master Photoguide,* AR-21. Both time and lens aperture corrections are indicated by this computer. Alternatively, use the formula below to find the effective *f*-number:

$$\frac{\text{Indicated } f\text{-number} \times \text{Bellows Extension (lens-to-film distance)}}{\text{Focal Length of Lens}} = \text{Effective } f\text{-number}$$

Diffraction and Small Apertures

When a lens is stopped down to an aperture of small diameter, an effect known as diffraction may cause a loss of critical sharpness.

Diffraction is a consequence of the wave nature of light; its practical effect is lateral spreading of a beam of light when it encounters the edge of an opaque object. A situation such as this exists when light passes the edge of the iris diaphragm in a lens. Although the same amount of diffraction takes place at any lens opening, the effect becomes progressively serious as the actual size of the aperture is reduced. Since the diameter of the aperture at a given stop becomes smaller as the focal length becomes shorter, it follows that diffraction is most detrimental to sharpness with short focal-length lenses stopped down beyond a certain point.

When a lens is stopped down from its largest aperture, the effect of residual aberrations becomes progressively less and the effect of diffraction progessively greater; at some intermediate aperture the lens yields its best definition. Generally, this is about two stops down from the maximum aperture, but it varies with focal length and largest aperture, as well as with the amount of residual aberration present in the particular lens.

Most lenses used in large-format work can be stopped down to relatively small *f*-stops before the effect of diffraction becomes serious. This is fortunate, because such lenses have relatively small depth of field and small stops must often be used to get a desired result.

Lens Aberrations

Lenses generally are subject to a number of aberrations that distort the image or affect its sharpness. There are five aberrations of form which are known as coma, astigmatism, distortion, spherical aberration, and curvature of field. There are two aberrations of color known as lateral and longitudinal chromatic aberration. Any single lens—a magnifying glass, for example—suffers from all of these to a greater or lesser degree, depending on the ratio of its focal length to its diameter.

To improve image quality, lens designers combine one type of lens with another or several different elements in combination. Thus, the imperfections in one element can be made to cancel the reverse imperfections of another. In modern lenses, this technique has brought the correction of aberrations to a very high standard, but because perfection is not in the nature of such things, all lenses have some degree of residual aberrations, which in the present state of the art, are impossible to eliminate. In general, the larger the maximum aperture and the wider the angle of view, the greater is the chance that these residuals will become troublesome.

It is beyond the scope of this book to describe all the lens aberrations in detail, but because so many photographers are working with color materials today, a short description of the aberrations of color will be useful.

Chromatic Aberrations

There are two chromatic aberrations in a simple lens, both are effects of the same cause. Light of different colors comes to a focus at different distances behind the lens; for example, an image formed by blue light focuses closer to the lens than an image formed by red light. Thus, both focal length and image size vary with the color of the light that forms an image.

The difference in focal length is known as longitudinal color aberration; overall sharpness improves as the lens is stopped down. The difference in image size is known as lateral color aberration, or simply lateral color; this is not improved by stopping down. In black-and-white negatives lateral color results in a slight loss of definition, particularly at the edges of the field. In color negatives, it results in color fringes around objects in the image. Again, the effect is most severe at the outer parts of the field.

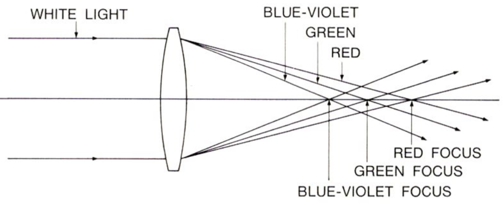

Light of different colors is not focused in the same plane by a simple lens.

In what is called an apochromatic lens, chromatic aberration has been practically eliminated. In many cases, the lens designer can compromise between almost complete removal of this fault and an increase in some other residual aberrations.

In large-format work, lateral color may be noticed with wide-angle lenses when a view-camera adjustment places the image so that one side of the negative is outside the circle of best definition.

Depth of Field

When a lens is focused for a certain distance, objects at that distance only are sharp. At all other distances, objects are more or less unsharp depending on the focal length of the lens and its aperture. The distance behind and in front of the plane of sharp focus within which objects are acceptably sharp is the depth of field. Other things being equal, depth of field increases with decreasing focal length and decreases with increasing aperture.

Obviously, there is no simple way to define acceptable sharpness. It varies with the type of picture, the photographer's artistic intent, and the use for which the photograph is intended. For example, in a head-and-shoulders portrait the tip of the nose and the face should be sharp, but if the ears and the background are unsharp the effect is pleasing. In fact, portrait lenses are designed to give this effect at the larger apertures. An opposite case to a portrait is a row of machine tools in a workshop; it would be disconcerting if the nearest and farthest machines were out of focus.

In view-camera work, the lensboard can be swung or tilted so that the focal plane is parallel to a row of objects, for example. Although this does not alter the depth of field of the lens, it has a similar effect in the picture. Since the depth of field of the long focus lenses used with large formats is necessarily short, the lensboard adjustments are a valuable feature in achieving sharpness over a desired subject plane. See "View-Camera Movements" on page 25.

A photographer who is unaccustomed to judging depth of field on the focusing screen of a large camera may be disappointed to find that the depth seems much less in the negative or in a print. After some experience, however, he will make allowances for this difference.

Since the term "acceptable sharpness," as used above, implies an arbitrary selection by the observer, depth-of-field calculations must be based on some criterion that obviously will vary with the application. Usually, such calculations are based on a certain size of the circle of confusion that yields acceptable definition in a print viewed from the correct center of perspective. Photographers are aware that the greater the viewing distance, the sharper the print appears to be.

It is not the intention to discuss depth-of-field theory here, but an explanation of the term "circle of confusion" is in order. If we assume that an image in sharp focus consists of rays of light imaged as points on the film, then any departure from sharp focus results in the points being enlarged into discs which become larger and larger as the image becomes farther out of focus. These discs are known as circles of confusion; however, they become recognizable as such only when the image is a long way out of focus—an effect often seen in the background of a picture taken with a large *f*-stop or with a very long-focus lens used at an intermediate aperture.

For critical sharpness, the circle of confusion should be about 1/200 inch in diameter for a print viewed for correct perspective (i.e., a distance equal to the focal length of the camera lens for a contact print and the focal length of the lens multiplied by the degree of magnification for an enlargement). For most purposes, however, a circle of confusion of 1/100 inch in the print is acceptable. It follows that when a circle of confusion of

Although there is no simple way to define acceptable sharpness, a picture such as this would not be successful if the main elements were not critically sharp.

1/100 inch is selected as the criterion, depth of field can be defined as the object distance over which the points in the image consist of circles not larger than 1/100 inch.

After a specific size for the circle of confusion has been selected, it is possible to compute the depth of field that corresponds to it for any focal-length lens and object distance. For each set of conditions there is a distance—called the hyperfocal distance—which can be used to make the calculation. The hyperfocal distance can be defined as the nearest distance at which the lens can be focused so that the image out to infinity is acceptably sharp within the limits imposed by the selected circle of confusion. See "Optical Formulas" on page 47.

In practice, the photographer rarely needs to calculate depth of field for himself. He can use published tables or the Depth-of-Field Computer in the *KODAK Master Photoguide,* AR-21. Remember, however, that the depth of field of which a lens is capable is not always used in photography. Reduced depth is often used to give prominence to an object of prime interest and sometimes to subdue an uninteresting or objectionable background.

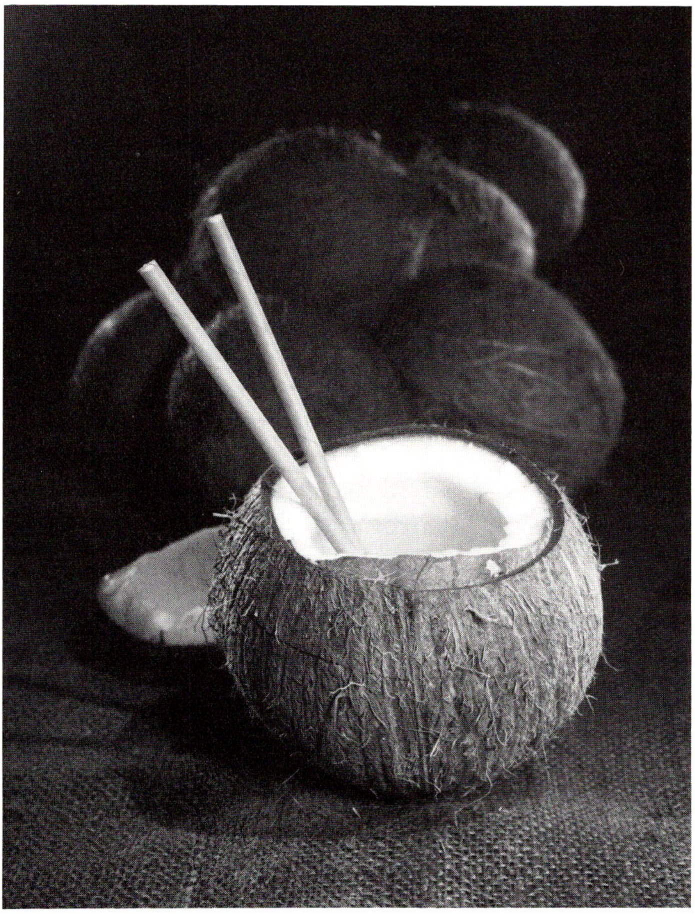

An example of how a shallow depth of field was used to accentuate the principal object in the picture.

Definition

Most lenses produced by reputable manufacturers yield definition adequate for the purpose for which they are designed. Although the best lenses are often the most expensive, modern lenses in the intermediate price range give results that are quite satisfactory for a great many professional purposes. Before buying lenses, therefore, the photographer should consider the requirements of his particular work. Remember that unless the precision of every part in a photographic system is high and the workmanship excellent throughout, the quality of a high-priced lens may well be wasted. For example, a poor-quality or a dusty enlarger lens can lower print quality so much that the performance of a first-class camera lens becomes somewhat academic.

There are many stages in a photographic system at which some loss of definition can occur; to realize the definition of a good camera lens, bear the following points in mind:

1. Focus the camera carefully on the desired object or area of the scene. This is particularly important in using large lens apertures and long-focus lenses. Use a focusing magnifier if necessary.
2. Mount the camera on a good, rigid tripod or stand. Vibration can be a source of trouble, particularly when a heavy lens is used with a long bellows extension. Wind and heavy traffic are troublesome outdoors, and indoors the camera may vibrate to machinery in the building, large air-conditioning plants, and traffic on roads outside.
3. Stop the lens down to an intermediate aperture when depth-of-field considerations permit. Remember that long-focus lenses can be stopped down to smaller *f*-stops than short-focus lenses, because loss of definition caused by diffraction depends on the actual size of the aperture and not on the *f*-number.
4. Keep lenses free from dust and fingermarks or other greasy deposits. Always cap lenses that are not in actual use.
5. Aim for the minimum exposure that will yield adequate shadow detail. Develop the negative for the time and at the temperature given in the instruction sheet that accompanies Kodak film. Note that overexposure causes loss of

definition because of increased diffusion of light within the emulsion and its support. Overdevelopment increases graininess, which causes an apparent loss of sharpness in the print, particularly when the negative has been enlarged considerably. By the same token, very fast emulsions tend to be more grainy than slower ones; consequently, when the finest definition is required, use a film of intermediate or slow speed.

6. Make sure that the position of the film in the holder is the same as the position of the ground glass focusing screen, because any difference in the two planes will cause the image to be out of focus.
7. In contact printing, definition can be lost through poor contact between the negative and the paper. In projection printing, use a good-quality lens designed for the purpose. Moreover, a dusty or dirty lens destroys both definition and contrast in the print. A condenser-type enlarger yields more contrast and sharper apparent definition than a diffused-light type.
8. Enlargers are prone to vibrate for the same reasons as cameras. Such vibration is a frequent cause of loss in critical sharpness. To reduce the effect of vibration, place the enlarger on a solid table, or on a solid base if it is a freestanding model. Avoid long exposures where possible and also avoid very short exposures to intense enlarger illumination, because this causes spreading of light at the paper surface and a consequent loss of definition.
9. The enlarger should be equipped with a heat-absorbing glass, because excessive heat may cause the negative to buckle and so change the focus.

For further information about the definition of film emulsions and printing technique, refer to the following Kodak Publications: No. F-5, *Kodak Professional Black-and-White Films* and No. G-5, *Professional Printing in Black-and-White.*

Image quality depends largely on correct exposure and development of the negative. This picture was made with a 4 x 5-inch camera. Note the excellent highlight and shadow detail.

The progressively diminishing size of similar objects and the convergence of horizontal lines provide an illusion of distance in a photograph.

PERSPECTIVE

In making a two-dimensional representation of a three-dimensional scene, perspective is one of the principal means whereby the observer perceives distance and is enabled to judge the relative positions and sizes of objects in the scene. This illusion of distance is created by the convergence of horizontal lines known or thought to be parallel and by the apparently diminishing size of objects with increasing distance.

Conventional linear perspective is the means whereby the artist constructs his picture according to a well-established geometrical pattern, but he has the freedom to alter the pattern in some respects as he sees fit. The photographer, however, is practically confined to the image geometry given by the camera lens. Consequently, geometrical perspective is a more appropriate term to use with reference to photographs. This distinction is made because there are differences between conventional linear perspective and the geometry of an optical image, although they both serve the same purpose in providing an illusion of distance in a picture.

From the earliest days of photography, photographers have tried to adapt the optical image to conform as nearly as possible to conventional linear perspective. At first sight, this attitude might seem to be slavish, but there are some good reasons why it was taken. In recent years, however, the convention has relaxed somewhat. This is because people are more ready to accept the results made with small hand-held cameras, which do not have adjustments for modifying image geometry. For example, most people accept converging verticals that are known to be parallel more readily than they used to. However, professional photographers should remember that such convergence does violence, in many cases, to what the moving eye sees and also to what is expected in a good representation of a scene or object. The effect of converging vertical lines that are known to be parallel is not a false one, it is merely a natural consequence of placing the camera at an angle to the subject plane. Only when the observer looks up at a tall building from a close viewpoint, for example, can he see the effect.

Parenthetically, and as a matter of interest, the earliest known coherent system of perspective

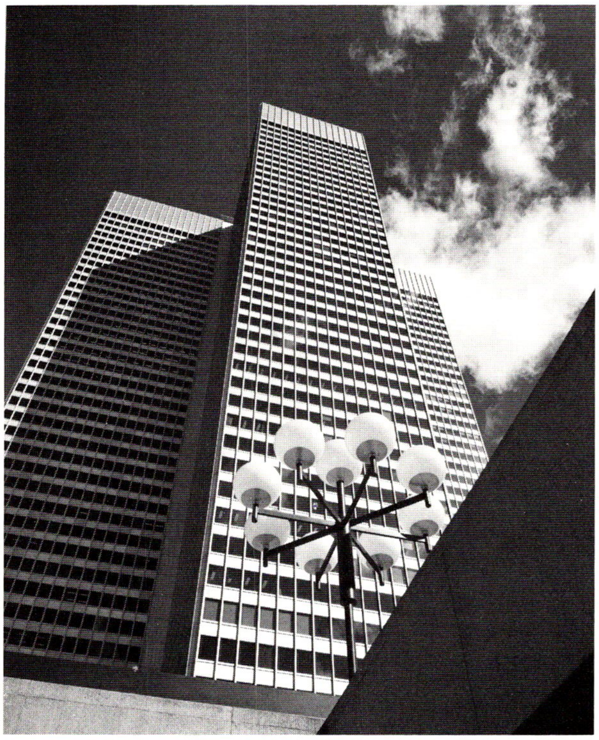

This picture, which also appears on the cover of this book, shows how converging vertical lines can be used to create a dramatic effect.

The convergence of vertical lines in this photograph is the result of pointing the camera upwards. This effect is not seen by the eye when a building is viewed from a considerable distance.

drawing was worked out by the Florentine architect, Filippo Brunelleschi, in the fifteenth century. Before his time, no coherent method of perspective drawing had been used. This is surprising, because Brunelleschi's perspective drawing gave a close representation of what the human eye sees, and it is difficult to understand why such a system was not discovered earlier. These remarks may seem to have little bearing on modern photography, but they serve as another indication that most people do not have much innate ability to interpret two-dimensional pictures as real scenes without a great deal of experience in viewing pictures and without a considerable amount of help from the artist or the photographer, as the case may be.

Geometrical Perspective

As stated earlier, an optical image projected by a lens onto a plane perpendicular to the lens axis always yields the same geometrical perspective. This means that parallel lines, except those perpendicular to the lens axis, will converge to a point inside or outside the format. Lines parallel to the lens axis will meet at the point where the lens axis cuts the picture plane. All other systems of parallel lines will meet at a point where a line parallel to them from the lens would cut the picture plane. Thus the lens image has a coherent system of convergence, which observers have learned to associate with distance in both pictures and in actual scenes.

Although any photograph taken with a well-corrected camera lens is an image in true perspective however distorted or odd it appears to be, such apparent distortion is merely the result of taking the photograph from a viewpoint that the eye rarely, if ever, sees. If the picture could be viewed from the same point of perspective as the camera lens, the unusual size relationships and peculiar shapes would disappear. In fact, no photograph is seen in correct perspective unless it is viewed from the same position as the camera and from the same lens-to-film distance that existed when the photograph was taken. If the negative has been enlarged, then the correct viewing distance is the focal length of the lens multiplied by the magnification.

Pictures, however, are viewed from a variety of distances depending on the condition of the observer's eyesight, and on whether or not he is able to get near enough to the picture to see it from the proper distance. Observers are not particularly interested in viewing pictures at distances other than those that come naturally to them, but in some cases, the viewing distance is important. For example, when photographs are used as evidence in court, it might be necessary to make estimates of the distances between objects and of their relative sizes. Then, it would be useful to know what changes in perspective take place when prints are viewed from different distances.

In a lens image, the actual size of an object depends directly on its distance from the lens. If one object is, say, 4 feet from the camera and another is 100 feet away and then the camera is moved 2 feet closer to the nearer object, the image of that object will be about twice as large, but the image of the farther object will not change appreciably in size. If the photograph is viewed from a point closer than the correct one, all the elements in the picture become uniformly larger, and thus the enlargement of distant objects is proportionately greater than of those nearby. This effect is equivalent to bringing the distant objects closer in relation to the foreground objects. In other words,

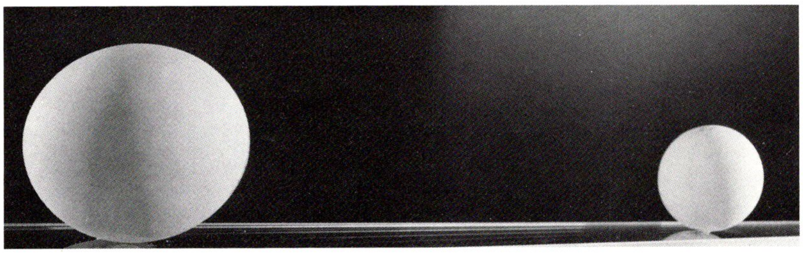

These two balls were round and of equal size. The distortion is a combinaton of wide-angle distortion and foreshortening. Viewed obliquely from the side, the larger ball can be made to appear round.

when the eye is too close to the picture, the perspective effect of distance is reduced. By the same token, when the eye is too far from the picture, perspective appears to be steeper and the distance between near and distant objects appears to increase.

Photographs generally are viewed from too great a distance; this is particularly true of small contact prints, and it explains the apparently exaggerated size relationships often seen in such photographs.

Situations in which photographs are viewed from too close a distance are comparatively rare, but the effect is unmistakable. Pictures made with long telephoto lenses (where distant objects are seen without reference to those in the foreground) are the most common examples. There is little or no change in the size of similar objects with distance; therefore the space between them seems to have diminished drastically. This effect is almost a case of parallel perspective, such as that seen in oriental art. Another effect of too close viewing is a photomural that has been greatly enlarged and situated in a position where it cannot be seen from the proper distance. This unnatural effect is sometimes compounded by the observer being forced to view the mural from a position well below the original point of perspective—the camera position.

The perspective of this picture appears to become steeper as the viewing distance increases.

In selecting photographs for display, exhibitions, murals, and the like, some attention should be paid to the question of viewing distances, because the effect of pictures can be enhanced if they are seen from approximately the correct distance. The reverse is true if they are seen from a position much different from the ideal one.

Perspective and Focal Length of Camera Lenses

In most discussions about perspective in photography, it is stated that with any lens the perspective obtained from a given camera position is unalterable. This is true, because the geometry of optical images is always the same, regardless of the focal length of the lens. However, this fact imposes no limitation whatsoever on the photographer. He has at his disposal as many different variations of perspective as there are positions in which he can set up his camera and so vary the juxtaposition of objects to an almost limitless extent. It is also stated frequently that the use of lenses of different focal length does not alter perspective. This is also true, but the use of a long focal length rather than a short one, for example, does alter the appearance of a picture drastically. First, because that part of the image where perspective is less steep has been selected, and second, because apparent perspective may be altered by an incorrect print viewing distance.

In practical photographic work, the question of perspective must often be secondary to obtaining the required picture. In confined operating spaces, it is often necessary to use a wide-angle lens and, as a result, a somewhat unpleasing perspective must be tolerated. The photography of interiors of buildings are examples of this situation.

In portraiture and, in fact, in any photograph of a human figure, it is necessary to use a lens of sufficiently long focal length to obtain acceptable drawing, or perspective. Any apparent distortion caused by a too-short focal-length lens is not tolerable because such effects are never seen in observing real people. The size-constancy effect is one reason why unnatural size relationships are not usually seen in reality. When they appear in a photograph, the result is freakish, or at least remarkable.

Photographs taken with lenses of different focal length from the same camera position have the same geometrical perspective. The difference is in the size of the image and in the amount of the subject included in the negative.

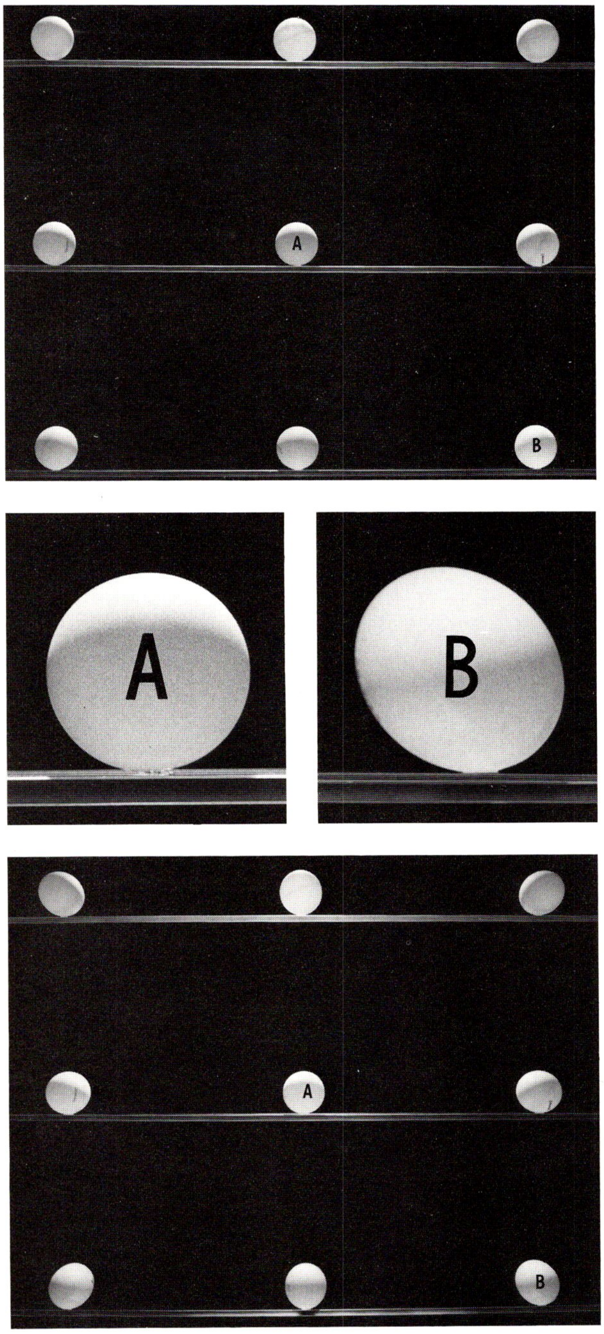

The identical ping-pong-ball subject was used for these illustrations. The picture at the bottom was taken with a 135mm wide-angle lens, and the one at the top with an 18-inch lens. The relative difference between the center and the corner balls in the lower picture is shown more clearly in the enlargements.

Perspective in Large-Format Photography

In using a view camera with all the usual adjustments, the photographer has the opportunity to modify geometrical perspective in some respects, but his efforts are usually directed towards making the optical image conform to what the human eye expects to see and what it does in reality see.

It was assumed in the previous discussion about perspective that the picture plane—the camera back—was vertical and parallel to the lens panel, or perpendicular to the lens axis. At this point it is necessary to consider the effect on perspective when the camera is tipped upwards or downwards, and when the picture plane is not perpendicular to the lens axis. The latter situation exists when the camera back is swung or tilted.

Converging Verticals: When the whole camera is pointed upwards or downwards, vertical lines in the picture converge, of course. Although this is a natural optical effect, it is not usually seen if the vertical object is observed from a considerable distance, because people tend to "see" shapes as they know them to be regardless of the geometry of optical images. Moreover, in the process of growing up, each individual develops a strong feeling for the vertical, and it becomes an important part of his relationship with the world in general. This feeling is particularly evident when a large structure appears to be out of plumb. The classic example is the leaning tower of Pisa; few people can view this building without feeling uneasy.

When a tall building is photographed with only one face showing and with the vertical edges converging towards the top, the structure appears to be falling backwards. This effect is probably due to the observer seeing such convergence as receding horizontal lines that he usually associates with distance in a picture. Provided that the camera back remains vertical, the illusion just described will not occur, but it may be necessary to raise the lens panel to include the top of the building, or it may be necessary to tilt the camera bed backwards and then to restore the camera back and the lens panel to the vertical position if raising the lens panel alone is not sufficient to include the top of the building.

In photographs of interiors it is particularly important to keep the upright lines vertical, because the convergence of verticals is rarely, if ever, seen in these circumstances.

A building photographed in this way appears to be falling backwards.

Another visual effect associated with vertical parallel lines is sometimes seen in photographs of tall rectangular buildings and objects of similar shape; if the sides of the structure are perfectly upright and parallel in the picture, there is a tendency on the part of the eye to see a slight divergence, or flared effect, towards the top of the building. This is probably an unconscious attempt to correct for convergence where none exists. To compensate for this rather undesirable effect, slight convergence should be introduced in photographing tall rectangular buildings, or other objects of similar shape, from a low camera viewpoint.

Converging Horizontal Lines: Although converging vertical lines are sometimes objected to in a photograph, when horizontal lines known or thought to be parallel converge, the effect is natural because it corresponds simply to a change in the horizontal direction of view; a most common visual experience.

On occasion, it may be desirable to reduce the convergence of horizontal lines; for example, when a long building is photographed from a position almost opposite to one corner. The convergence of the roof line and the ground level may be excessive if a short focal length must be used. This convergence can be reduced by swinging the camera back. Remember, however, that when another side of the building is visible in the photograph, reducing convergence of one side will increase convergence of the other side. Also, when convergence is a natural consequence of the viewpoint, such convergence should not be eliminated and the object made rectangular; otherwise, the photograph will be unrealistic, and the observer will make a strong, though unconscious, effort to restore the convergence that he knows should be seen. As a result, divergence of receding lines may be seen, which is an unpleasant visual effect. These remarks apply in photographing all rectangular objects, such as boxes, books, buildings with parallel sides, and the like.

To avoid the apparent divergence of vertical parallel lines, a slight amount of convergence is often desirable in a photograph of a building of this shape.

Convergence of horizontal lines, or the steepness of perspective, can be controlled by swinging the camera back. In the lower of these two illustrations, the camera back was swung to reduce the convergence.

THE ILLUSION OF DEPTH

The foregoing discussion of perspective was concerned mainly with image geometry and the way it helps to create an illusion of depth or distance in a two-dimensional representation of a three-dimensional scene or object. There exist, however, a number of other indications of depth which are of considerable interest to the photographer. These indications are sometimes called depth clues; some of them, binocular vision for example, operate only in viewing a three-dimensional scene. Others termed monocular depth clues, are probably well known to most photographers, but they may not have been used in a deliberate fashion to enhance the three-dimensional effect of a photograph. The following is a brief description of how these clues can be used deliberately in creating the illusion of depth.

Contrast: In black-and-white photography, one of the most important indications of distance is given by the contrast between highlights and shadows, and between varying tones of gray. This type of contrast can be controlled in several different ways; such as lighting, choice of film, development of the film, and the correct choice of paper in printing. Excessive contrast, however, tends to defeat the purpose because highlight and shadow areas that lack detail in a print also lack the essential three-dimensional effect.

In photographing objects of different colors that record on black-and-white film as similar tones of gray, the contrast between such objects can be increased by using suitable filters. These are usually called contrast filters, and their use is described in the section "Use of Filters," page 42.

In black-and-white pictures contrast is one of the most important indications of depth.

Lighting and Shadows

Lighting effects can, of course, yield vastly different impressions of depth in a photograph, according to the type of light source and the direction from which the light falls on the subject. Lighting for various photographic purposes is a large subject beyond the scope and purpose of this book, but in the simplest terms it is the means of producing light and shadow or, in other words, contrast. However, the way shadows affect the apparent distance between various objects in a scene by their shape, the direction in which they fall, and their length, is a much more subtle effect.

Generally speaking, people are aware of the source and nature of the light that makes objects and scenes visible to them. Consequently, the relative positions and sizes of objects are often judged by the shadows they cast. This is particularly noticeable in photographs in which the subject is sidelighted or backlighted and the shadows of objects such as trees, lamp standards, and the like are cast on the foreground. The judging of distance in this way is largely an unconscious process on the part of the observer; the result of his constant mental effort to determine the correct position of objects relative to himself and to other objects.

The visual effect just described can be seen in a photograph in which trees that cast shadows into the foreground stand some distance from a building. Since the shadows of the trees fall close to the observer, the trees are judged to be small because of their nearness. Thus, a fair estimate of the distance from the trees to the building, and to the observer, is made. If the tree shadows are removed, however, the trees appear to retreat to a position much closer to the building. The pair of illustrations on this page is an attempt to demonstrate this illusion, but in small pictures, the effect must be sought consciously. In larger prints, it becomes more obvious. When the photographer realizes that such visual effects exist, he can sometimes use them to advantage, although it requires a careful choice of camera position and some patience in waiting for suitable lighting.

Color as an Indication of Depth

In black-and-white work, the photographer must rely almost entirely on light and shade, and to some extent on the gray-tone rendering of colors, to give form and to provide depth in a photograph. In color photography, the three-dimensional effect is greatly enhanced by the addition of color contrast to that of light and shade. This is a natural

Shadows provide an indication of distance in a picture, and help the observer to judge the relative positions of, and distances between, objects in the scene.

In this illustration the shadow of a tree has been removed from the foreground. As a result, the tree appears to be nearer to the building than it does when the shadow is visible.

consequence of the observer's constant viewing of scenes in color whenever the light is bright enough to do so. When a color photograph and one in black-and-white of the same scene are viewed side by side, the point is demonstrated clearly. Other things being equal, the black-and-white version will usually be disappointing.

Aerial Haze

The effect of aerial haze caused by dust and moisture particles in the atmosphere is sometimes termed aerial perspective. The gradual lightening and loss of detail with increasing distance is a familiar visual experience that the observer associates with distance. Haze in photographs of mountainous country is effective in creating an illusion of great distance when there are a number of planes of decreasing density in the print. On the other hand, pictures of mountains can appear quite flat if haze is at a minimum and if the lighting is frontal or from an overcast sky. This is probably because linear perspective plays only a small part in creating the illusion of distance in purely scenic pictures, unless some converging lines, such as those of a road or a long fence, appear somewhere in the picture.

Photographic printers often use the effect just described to give an appearance of more depth in a flat scenic picture by gradually lightening the print from the foreground to the horizon, and darkening the sky gradually from the horizon upwards. Thus an illusion of distance is created.

The Overall Effect of Depth Clues

Depth clues are seldom seen separately; in fact, they are rarely seen at all unless the observer is sufficiently interested to look for them. It is the combined effect of all the clues that happen to be present in a scene that gives the three-dimensional effect. When the photographer is aware of all the factors that create the illusion of distance in a photograph, he will be in a position to use them deliberately and so enhance the quality of his pictures.

Aerial haze gives an illusion of great distance in a pictorial subject.

VIEW-CAMERA ADJUSTMENTS

These adjustments are used to control parallelism, the position of the image on the film, and sharpness of the image, as well as the shape of the image. The terms used by photographers, camera manufacturers, and writers to describe the various camera adjustments are not universal. Sometimes, they are referred to collectively as "swings and tilts," and such terms as "rising front," "cross front," "swing back," and so forth, will also be encountered. To avoid any misunderstanding of the terminology by those unfamiliar with the subject, the term "view-camera adjustments" will be used throughout this discussion, but to avoid tedious repetition, the word "movements" will sometimes be substituted. A brief description of each adjustment, and its effect on the image as projected on the film, is given at the end of this section.

Some view-camera adjustments are used to modify image geometry when that provided by the camera lens seems to be unnatural, or is distracting to the observer, or to overcome the limitations of a particular camera position. A common example is when the vertical lines of a building converge in a photograph to an extent that is unacceptable to the viewer. The same remark applies when it seems desirable to correct convergence of horizontal lines in a picture. The use of other adjustments is necessary when the image must be displaced on the film to include a part of the scene that would otherwise be cut off. Some other adjustments are necessary to obtain sharp focus over a subject plane that is not parallel to the film plane. Sometimes, this use of camera movements is referred to as a method of increasing depth of field. Sharpness is often increased over selected distances in this way, but remember that the effect is not the same as the overall increase in depth of field given by a small lens aperture.

Effect of Adjustments on the Image

Many or all of the movements described below will be found on a good-quality modern view camera, but with some older models the degree of adjustment may be less, or some movements may even be absent. Very often, however, when a certain adjustment is not provided, its effect can be duplicated by using a combination of other movements. For example, if no downward vertical movement of the lensboard from the central position is available, the adjustment can be duplicated by tilting the camera bed, or base, downwards, and then restoring the lensboard and camera back to the vertical position.

Vignetting at the top of the picture was caused by using the vertical movement of the lensboard (rising front) with a lens of insufficient covering power.

Vertical Movement of the Lensboard: This adjustment moves the image up or down relative to the film. In effect, it places the film nearer to the edge of the circle of illumination, or field, of the lens. The amount of vertical movement of the lensboard that can be used depends, therefore, on the size of the circle of illumination or, in other words, on the covering power of the lens. Also, some loss of definition and light intensity can be expected at or near the edge of the field, particularly with lenses of relatively short focal length.

Horizontal Movement of the Lensboard: This adjustment moves the image to the right or left relative to the film. The same remarks apply to the horizontal movement as to the vertical movement just described.

Tilting Lensboard: Vertical rotation of the lensboard about a horizontal axis. This adjustment affects overall focus without altering the shape (parallelism) of the image. The tilting lensboard causes some displacement of the image relative to the film, but the amount of displacement depends on the location of the pivot, or axis, about which the lensboard rotates. The adjustment is valuable for obtaining sharp focus over a subject plane that inclines from the vertical.

Swinging Lensboard: Horizontal rotation of the lensboard about a vertical axis. Again, this adjustment does not alter the shape of the image. As with the tilting lensboard, the swinging lensboard is used to control sharpness, but on subject planes that are inclined in a horizontal direction relative to the camera back.

Vertical Movement of the Camera Back: This adjustment moves the film up or down relative to the image. An upward vertical movement of the back achieves the same result as a downward movement of the lensboard and vice versa. Vertical adjustments are often used to augment one another when one alone has insufficient travel to get the desired result. A number of view cameras, however, do not have a downward adjustment of the back from the central position. Remember that when the camera back is raised or lowered, the film is displaced nearer to the edge of the lens field. Consequently, a lens with sufficient covering power is needed to use this adjustment. Also, there may be a loss of definition and illumination at that side of the negative nearest to the edge of the lens field. The amount of loss will depend on the focal length of the lens and its quality.

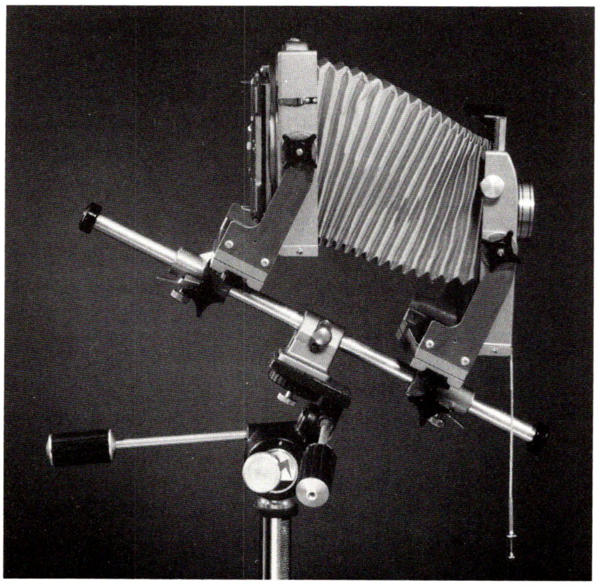

Vertical adjustments can be augmented or duplicated by tilting the camera base and then returning the lensboard and camera back to the vertical position.

Horizontal Movement of the Camera Back: An adjustment that moves the film to the right or left in relation to the image. The effect is the same as that just described for the vertical movements of the camera back, except that the travel is horizontal. Therefore, the remarks about lens coverage apply equally to the vertical and horizontal adjustments. On some cameras there may not be provision for horizontal movements of the back, but the effect of its use can be duplicated by swinging the camera base horizontally to the left or right, and then making the lensboard and camera back parallel to one another and to the subject plane.

Tilting Camera Back: This movement is a vertical rotation of the back about a horizontal axis. When the camera back is tilted backwards or forwards, it is, of course, no longer parallel to the lensboard. Consequently, the shape of the image is changed, because the top of the film is either nearer to, or farther from, the subject. Since any change in this distance causes a size differential, the shape of the image changes accordingly.

When the image has been focused, and then the camera back is tilted, the image will be sharp only along a line corresponding to the axis around which the camera back rotates. This assumes, of course, that the subject plane was parallel to the camera back in the first place. Sharp focus can be restored, however, by tilting the lensboard in the opposite direction to the tilt of the back. When the orientation of the subject plane, lens plane, and film plane is correct, lines lying along these three planes meet at a common point. The accompanying drawing illustrates this principle.

The tilting camera back does not in itself require lens coverage greater than that which is normal for the size of the film, but because this adjustment is very often used in conjunction with other movements, some extra lens coverage is usually necessary.

As a general rule, the shape of the image is controlled by using the camera back movements, and sharpness is controlled by the lensboard movements. While the sharpness of an inclined subject plane can also be controlled by adjusting the tilt of the camera back, this movement should not be used unless an alteration to the shape of objects in the picture is of no consequence, or when elongation or foreshortening is desirable. For example, when it is desired to make a short, stout person appear taller in the picture. Moreover, there may be occasions when the tilt of the back must be used to augment that of the lensboard when the latter has insufficient tilt to achieve sharpness over a steeply inclined subject plane.

Swinging Camera Back: This adjustment rotates the camera back in the horizontal direction about a vertical axis. Its effect and purpose are the same as those of the tilting back, except that the movement alters parallelism of horizontal lines and foreshortens upright figures and objects. For example, an automobile can be made to appear longer and lower than it is by swinging the camera back in an appropriate direction. As with the tilting back, the swinging back does not alter the position of the image within the circle of illumination of the lens; its use, therefore, does not require lens coverage greater than that normally used to cover the film size.

Reversing and Rotating Camera Back: On practically all view cameras the back can be changed so that the film is in either the horizontal or vertical position. On many cameras, the back also has provision for rotating the film holder to any intermediate position between horizontal and vertical.

This movement is useful for restoring the image on the film to an exactly vertical or horizontal position after the camera has been set up. The adjustment is also useful for slanting the image on the film when such a position is desirable.

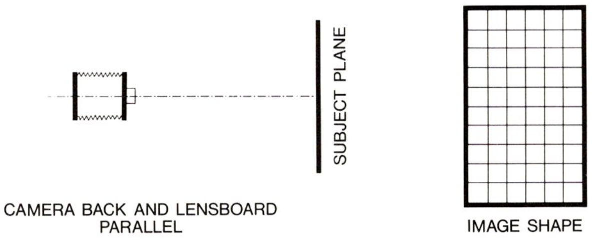

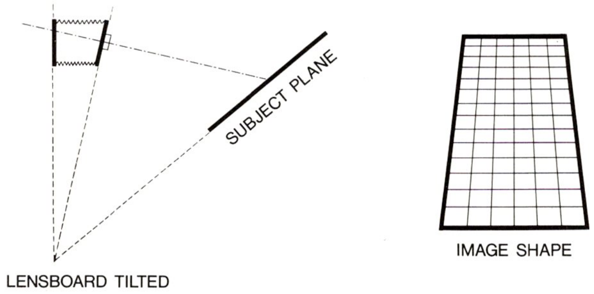

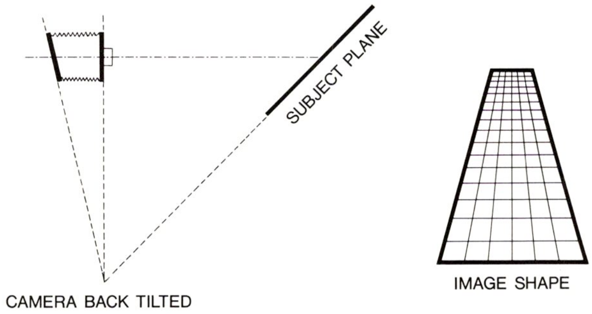

Basic Rules for Using the View Camera

When the purpose and effect of the view-camera adjustments have been mastered, the following basic rules should be observed. Their use will save a great deal of the time spent in making adjustments by the trial-and-error method.

1. Set the camera up so that the base is level—that is, horizontal—and place all the adjustments in the zero position.
2. To preserve the correct shape of the subject, keep the camera back parallel to the principal plane of the subject.
3. To preserve sharpness over an inclined subject plane, use the tilt or swing of the lensboard.
4. To control the shape of the subject or the perspective, use the swing or tilt of the camera back.
5. If the subject contains more than one inclined plane, first adjust the focus by swinging or tilting the lensboard to obtain focus over the longest inclined plane.

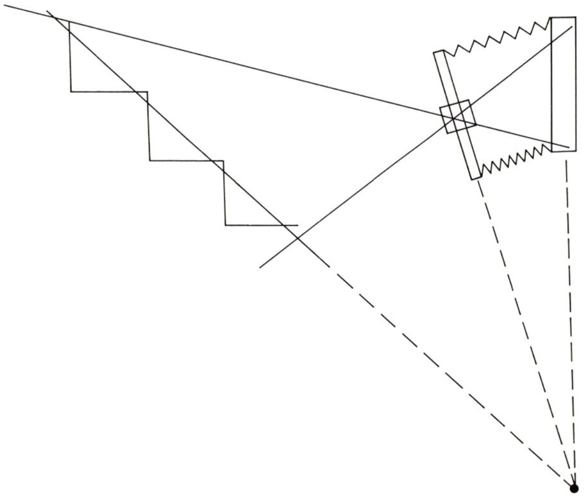

The best overall sharpness is obtained when extensions of the subject plane, lens plane and film plane meet at a common point.

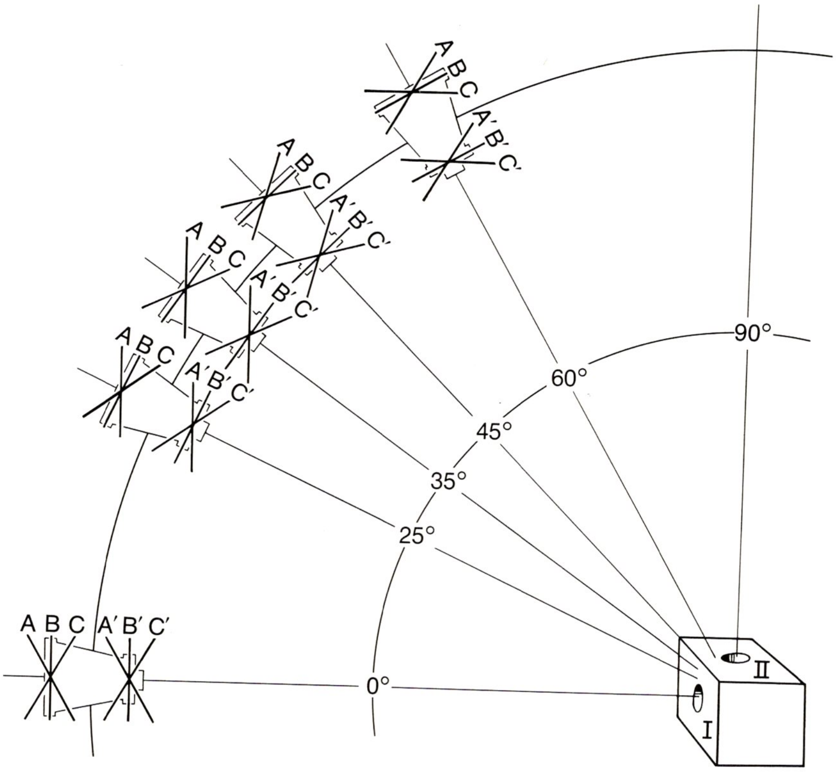

6. For the best depth of field, focus the lens on a point about two-fifths of the distance from the nearest and farthest points in the subject.
7. For the best overall sharpness over inclined subject planes, lines lying along the planes of the subject, camera back, and lensboard should meet at a common point. This effect is known as the Schiempflug principle.
8. A long camera bellows may sag when it is partially extended, and so cut off a part of the image. To avoid this, place a support under the bellows to keep it aligned correctly.
9. To avoid distortion, particularly of circular objects, use a lens with the longest focal length that circumstances permit.

Guide for Adjusting Camera Back and Lensboard

This diagram and table serve as an approximate guide for adjusting the back and lensboard of a versatile view camera for several different camera viewpoints. Note that the subject contains both horizontal and vertical lines as well as a circular hole in each of the principal planes nearest the camera. The problem is threefold: In each camera position it is desirable, of course, to photograph the subject so that the lines are parallel, the shape of the holes is undistorted, and as great a field depth as possible is obtained at the maximum lens aperture.

Camera Height	Back Positions*	Lens Positions	
		Plane I	Plane II
0°	A never	—	—
	B always	B′	—
	C never	—	—
25°	A generally	A′	C′
	B occasionally	A′ B′	B′
	C seldom	—	C′
35°	A frequently	A′ B′	B′
	B occasionally	A′	C′
	C seldom	—	C′
45°	A frequently	A′	A′
	B generally	A′ B′	B′ C′
	C seldom	—	C′
60°	A seldom	A′	B′
	B frequently	A′	C′
	C generally	—	C′

*This diagram represents a side view of the camera-subject relationships. If it is regarded as a top view, the camera back is generally used in B position.

As the table indicates, the lens position can be determined only after deciding which of the two principal subject planes is the more important.

It should also be noted that in many instances the eye will tolerate subject distortion of diverging lines with less annoyance than it will tolerate elongation of the subject obtained when one adheres too strictly to the "vertical back rule." Judgment is obviously needed in making compromises between elongation, parallelism, and the location of the plane of sharp focus. For example, at the 45° camera viewpoint, the camera back is generally at the zeroed B position. This means that parallelism has been sacrificed in favor of less elongation, which would result if the back were vertical.

Incidentally, with the back at the 45° B position, the lens is seldom used in a zeroed B position. In fact, in actual practice, it is usually desirable to swing or tilt the lens in accordance with the requirements of the subject.

Focusing the Camera

One of the objects in using a large-format camera is to get negatives of the greatest possible sharpness so that detail can be recorded to the best advantage in the photograph. Focusing the camera, therefore, should be done carefully. When you have composed the picture on the ground-glass screen and have made any necessary corrections or adjustments to the image, pause for a moment to rest your eyes, and then check the focus again, preferably with a focusing magnifier. Then, stop the lens down to an aperture that yields the depth of field that you consider adequate for the particular shot, but remember that the image on the ground glass usually appears to be sharper than it will appear to be in the negative. You will become accustomed to this effect after some experience in using view cameras.

Before assuming that the image is as sharp as possible after focusing and stopping the lens down, you should be aware that with some otherwise excellent lenses the point of sharpest focus shifts as the aperture is changed. If you suspect that this is a characteristic of a lens, make one test negative with the lens focused at full aperture and another focused at the aperture you intend to use; then compare the two images to see if there is a difference in sharpness.

Always mount your camera on a good, solid tripod or other type of stand. A large camera with a heavy lens is always prone to vibrate. Probably, more unsharpness is due to camera movement or shake than is due to improper focusing or inferior optical quality of lenses. Before making the exposure, pause to allow any possible vibration to die out. On a windy day, try to expose between gusts. Allow heavy vehicles, railway trains, and the like, to pass before making the exposure.

Other Factors That Affect Sharpness: Large-format cameras are generally used to produce photographs that convey information of some kind to the observer. The precision of modern view cameras, the performance of high-quality lenses, and the high definition of present-day sensitized materials are somewhat academic unless they are realized in the form of clear, sharp prints with a minimum of graininess. To obtain such results, every significant element in your photographic system must receive the same careful attention as you give to composing and focusing the picture on the ground-glass screen of the camera. Here are some points to consider:

1. Make sure that your camera lenses are clean and free from dust or finger marks. Otherwise, your negatives will lack contrast and critical sharpness, and the resolution of fine detail will suffer accordingly.
2. To minimize the effect of flare caused by reflection of light from the interior of the camera, be sure that the interior is painted matte black. Flare is nonimage-forming light that affects the negative by adding density to the shadows. Thus, shadow detail is reduced in contrast and the overall density range is lowered.
3. Because overexposure causes increased graininess and loss of definition, give only sufficient exposure to obtain satisfactory shadow detail.
4. Do not develop negatives much longer than the time recommended in the instruction sheet packaged with the film, because overdevelopment results in high contrast and increased graininess.

To get the best results from good negatives, follow these suggestions in printing:

1. Always use the highest quality enlarging lens that you can get. Otherwise all your efforts that went into making excellent negatives will be wasted. Brilliant, sharp prints with a long range of tones cannot be made with a dirty, dusty, or inferior enlarging lens.

2. The slightest vibration of your enlarger will cause a loss of definition. Many vertical enlargers are prone to vibrate when the head is at or near the top of its travel. In this situation, attach the top of the column to a solid wall by means of a bracket.
3. When definition and the best rendering of detail are important, use a smooth or glossy paper.
4. In black-and-white printing, always use the contrast grade of paper that suits the density range of the negative. Too-high contrast paper tends to increase the appearance of graininess, whereas too-low contrast paper impairs the resolution of fine detail.

It will be obvious that some of the foregoing remarks apply only to black-and-white photography and that others apply equally to black-and-white and color.

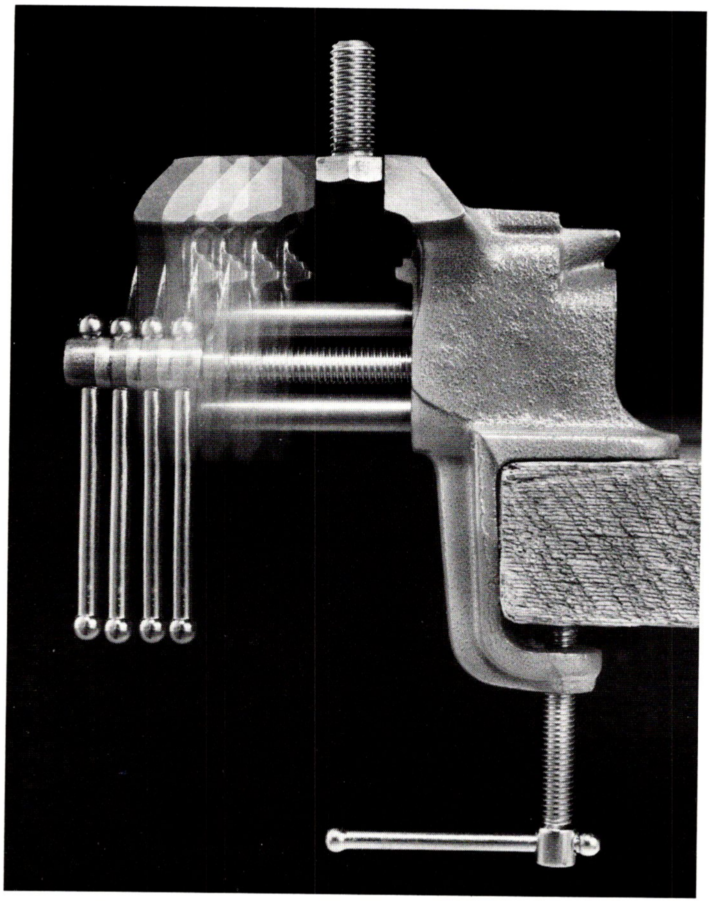

The sharpness of a good camera lens can be realized only by using an enlarger lens that is free from dust or finger marks.

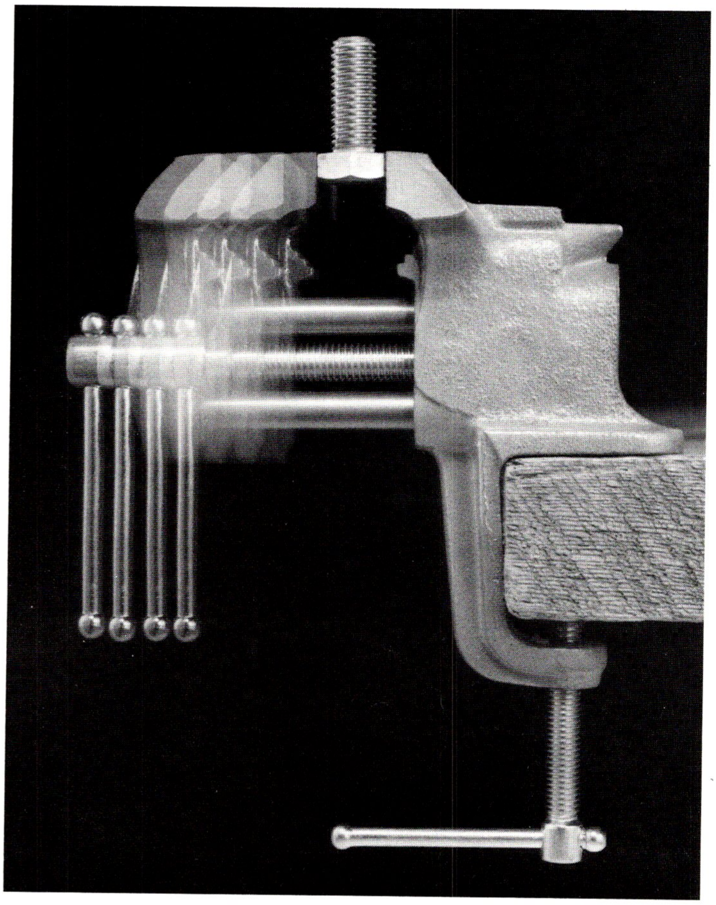

This print was made with a finger-marked enlarger lens. Note the reduction in contrast and the loss of clarity in fine detail.

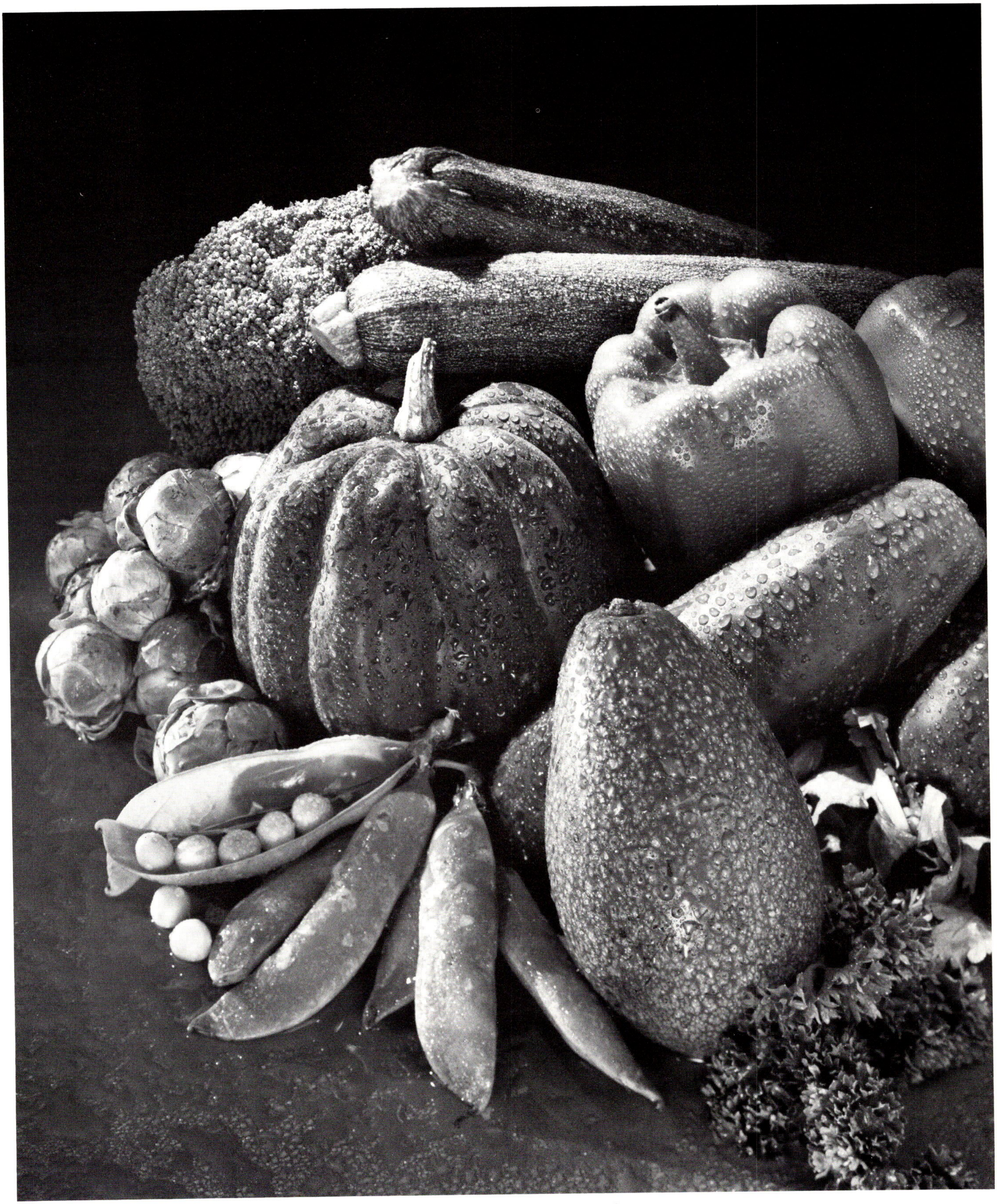

The best quality prints are those made from correctly exposed and developed negatives.

EXPOSURE OF NEGATIVES AND TRANSPARENCIES

It is well known that exposure in color photography is critical, and that exposure for transparencies on reversal color film is particularly so. It is desirable, therefore, to bracket the calculated exposure and so obtain at least one negative or transparency that has the best possible characteristics.

In exposing color negative materials, you have some latitude, because latitude also exists in exposing color prints. In photographing scenes with normal luminance ratio, therefore, it is sufficient to bracket your exposure with one stop less and one stop more than the calculated exposure.

The calculated exposure for reversal color-transparency material is usually bracketed in one-third stops. There is little tolerance to overexposure with this kind of film, because highlight detail can be lost rapidly. The denser transparencies obtained with slight underexposure are often usable, or even preferable in some cases. In critical work, many cameramen make only one or two exposures on the overside and several on the underside. Thus, they are sure of having at least one or two usable transparencies. Remember, also, that this is an insurance against the risk of damage to the films in processing.

At first sight, making several exposures on single subjects seems to be an undue waste of material and processing cost, but in professional work, the cost of time in making an elaborate setup, working on location, and employing models far outweighs the cost of extra film and processing. In fact, on many occasions, failure to get satisfactory results the first time would be a financial disaster.

Although the bracketing of exposures is often necessary to get the best results, it should not be made an excuse for careless assessment of the basic exposure. Whether bracketed or not, the results may depend on how careful you were in determining the basic exposure. Moreover, the habit of care could make the difference between getting a satisfactory negative and one that's poor on those occasions when you must rely on only one exposure to obtain a picture.

Exposing Black-and-White Negatives: The "ASA" speed ratings for black-and-white films are determined by the procedure specified in ANSI Standard Method for Determining Speed of Photographic Negative Materials (Monochrome Continuous-Tone), PH2.5-1960. These speed numbers are based on the statistical average of a large number of scene-luminance measurements, and in general, their use leads to the minimum exposure necessary to obtain satisfactory shadow detail in black-and-white negatives.

Speed values are not independent of other factors in the photographic process; in fact, every significant element in a photographic system can potentially alter the *effective* speed of a film. In most instances, use of the rated speed will yield satisfactory results, but if your negatives are consistently overexposed or underexposed, then use a speed value higher or lower than that given for the material.

Exposure Latitude

The amount that you can deviate from the ideal exposure and still get a satisfactory negative is called exposure latitude. It is sometimes stated that the latitude of black-and-white films is so great that you can tolerate gross errors in exposure. This statement needs to be qualified: It is true that a film can be overexposed by several stops and still yield a printable negative, but in professional work, the aim is not to produce negatives that are just printable, but those that yield the best quality prints. Another aspect of poor-quality negatives is the time and material it takes to print them. Any time or effort taken to assess exposure correctly will be amply repaid by the time and material you save in printing, as well as by the satisfaction afforded by producing high-quality work.

It is generally accepted that the best negatives are those that receive the minimum exposure consistent with good shadow detail. Exposure appreciably less than this minimum results in thin shadows that lack detail. Thus, there is little tolerance to underexposure. Most continuous-tone films can be exposed for several times the minimum exposure and still yield a fair-quality negative, but remember that excessive exposure results in high density and an increase in graininess. Moreover, the higher the luminance ratio of the scene, the lesser is the available latitude, because overexposure may place the high densities on the shoulder of the characteristic curve, where increases in exposure do not result in density differences. As a practical matter, this means that highlights will be flat and lacking in detail.

For a more complete discussion of negative exposure, refer to Publication No. F-5, *KODAK Professional Black-and-White Films.*

Reciprocity Effects

This effect is generally insignificant with normal exposure times, say 1/10 second-1/1000 second. Exposures of 1 second and longer require extra exposure to obtain a normal negative. As the exposure becomes longer, the reciprocity effect becomes greater, and a still longer exposure is necessary to avoid underexposure. At the same time, the contrast of the image increases, so that a reduction in development is needed to obtain normal contrast.

With exposures shorter than 1/1000 second, you might notice some loss of density in the highlights of a negative. This effect can usually be compensated by an appropriate increase in development. In using automatic electronic-flash equipment at short camera to subject distances, exposures are extremely short. Then, you may need extra exposure, as well as development, to compensate for the reciprocity effect.

Reciprocity Effect with KODAK Color Films: In using color materials the reciprocity effect is complicated by the presence of three different emulsions with different characteristics. At abnormally long exposure times, color films exhibit changes in color balance as well as loss of density. These effects can sometimes be compensated by using appropriate filters and exposure adjustments.

When longer-than-normal exposure is necessary, use KODAK EKTACOLOR Professional Film 6102, Type L (Long Exposure). This film is designed to avoid appreciable reciprocity effects at exposure times from 1/10 second to 60 seconds.

For the maximum exposure times recommended for Kodak color films, as well as exposure and filter recommendations to compensate for reciprocity characteristics, refer to Publication No. E-77, *KODAK Color Films.*

Bellows Extension and Effective Aperture

Exposures calculated by means of the *f*-numbers engraved on the lens barrel are correct for a lens focused at infinity, and sufficiently so for object distances greater than eight times the focal length of the lens. As the object distance becomes progressively shorter, the lens-to-film distance, or bellows extension, increases in proportion, and so the brightness of the image is reduced. Thus, the effective *f*-number yields insufficient exposure by normal calculation; then exposure must be increased by using a larger aperture or a slower shutter speed.

The formula below gives the effective *f*-number:

$$\frac{\text{Indicated } f\text{-number} \times \text{Bellows Extension (lens-to-film distance)}}{\text{Focal Length of Lens}} = \text{Effective } f\text{-number}$$

For correct exposure, the effective aperture must be opened by an amount equal to the difference between the effective *f*-number and the indicated *f*-number. For example, when a 10-inch lens has been extended 10 inches beyond the infinity setting, the bellows extension is then about 20 inches. Suppose the calculated exposure for an object at infinity is 4 seconds at *f*/16, the above formula gives an effective aperture of *f*/32. Then, the correct *f*-number to use would be *f*/8, or two stops more than the indicated—or calculated—*f*-number.

In many cases, it is desirable to increase the exposure time rather than to open the lens aperture to compensate for an extended bellows. The table below gives some exposure corrections for typical situations.

NOTE: The above formula does not hold for telephoto lenses.

Sharpness and the Contrast of Fine Detail

The way unsharpness affects the contrast of an image and its effect on the clarity of fine detail is not generally understood, but the subject is of considerable importance in photographs that are primarily intended to convey information. First, it can be stated that a lack of definition, whatever the cause, reduces contrast to an extent that depends on the degree of unsharpness. What is not generally understood is that a slight lack of critical sharpness reduces the contrast in fine detail without affecting the overall contrast of the picture. For example, the surface texture of a material photographed can be seen clearly only when the image is quite sharp.

Suppose that an image is made so far out of focus that it ceases to be an image, properly speaking, but is merely a patch of light. As the image is brought more nearly into focus, the contrast increases as the image takes form. For large areas of light and shadow, the limit of contrast is reached before the image is quite sharp, but for small areas of light and shadow—fine detail—the maximum contrast of which the optical system is capable is not reached until the image is quite sharp. The reason for this difference can be explained in the following way: Suppose that a fine white line is photographed against a black background. If the line is not focused sharply, it will be imaged on the film as a wider line than that in the subject. In this situation, the light reflected by the white line, and transmitted by the lens, is spread over a larger area than it would be if the line were focused sharply. For example, if the line is imaged at three times the width that it would be if sharply focused, the light from the line is spread over three times the area of film; then it will have only one third the density, and one third the contrast in relation to the black background. These figures are approximate of course, the net loss in contrast might be more or less, depending on other factors such as the contrast of the film, the amount of development, and the quality of the lens.

The effect of unsharpness on contrast is not noticed in the larger areas of density, because these areas are not much changed in size by unsharpness; only the boundaries are affected. Consequently, the overall appearance of contrast is not changed. The effect just described is often applied in portraiture by using a soft-focus lens, which reduces the contrast between skin and small areas of low density—such as lines, wrinkles, and small blemishes—while maintaining a normal contrast for the whole portrait.

Exposure Compensation for Long Bellows Extension

Bellows Extension (in multiples of focal length)	Scale of Reproduction (percentage of object size)	Multiply exposure calculated for infinity by:*	Multiply exposure indicated for same-size reproduction by*
1⅛	12½%	1¼	5/16
1¼	25%	1½	⅜
1½	50%	2¼	½
1¾	75%	3	¾
2	100% (same size)	4	1
2½	150%	6	1½
3	200%	9	2¼
4	300%	16	4

*Since there is some tolerance in camera exposures, these figures have been rounded off for the sake of simplicity.

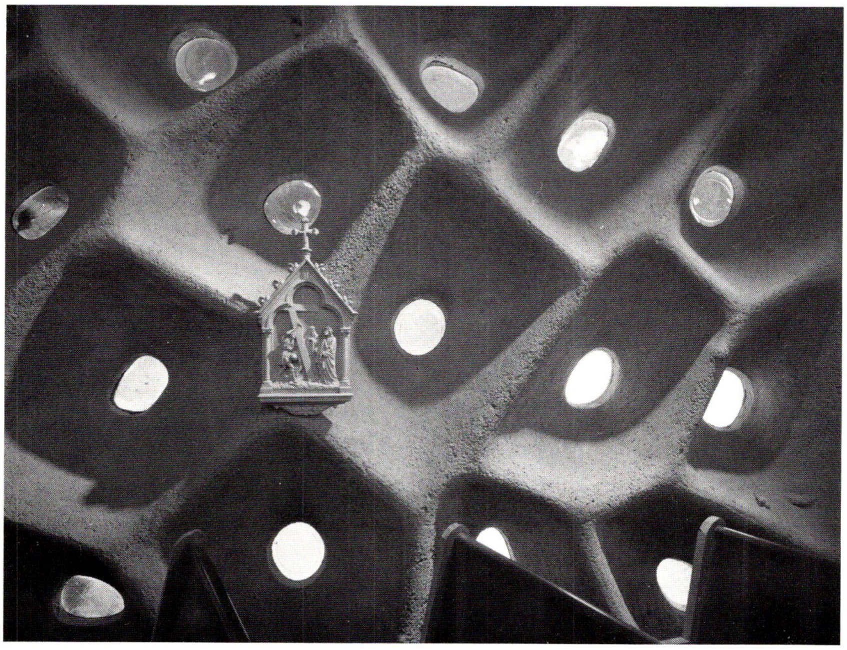

Critical sharpness is essential to the rendering of fine detail.

PORTRAITURE

Although there is a modern trend in portraiture towards making portraits in informal situations, large numbers of portraits are still made in the studio with large-format cameras. Film sizes from 4 x 5 inches up to 8 x 10 inches are normal. The most suitable size film to use depends on circumstances, such as the degree of enlargement required, the cost, and the amount and quality of retouching. In general, a black-and-white portrait negative should not be enlarged more than about three times. Always use the largest size negative that conditions permit, because retouching is easier and the results of retouching are less visible on a large negative than they are on a small one. As a rule color negatives require less retouching than black-and-white ones, and because sharpness is not a prime consideration in a portrait, color negatives can be enlarged to greater magnifications without undesirable graininess.

Studio Cameras

Professional studio cameras are usually of the square-bellows type and are constructed from heavier materials than the ordinary view camera. Some of the view-camera adjustments described in this book will be found on a studio camera, but as a rule, the swing and tilt of the lensboard are absent. Control of perspective is afforded by altering the camera elevation in relation to the sitter, and by tilting the camera bed as well as the camera back. To bring the lensboard parallel to an inclined subject plane, the camera bed can be tilted. To alter the size relationships—between the sitter's hands and his face, for example—the back can be tilted in an appropriate direction. However, this adjustment must be used with discretion to avoid undesirable distortion.

Studio cameras are not portable objects in the ordinary sense; they are mounted on heavy, wheeled stands that provide great rigidity and some ease of movement within the studio.

Lenses for Portraiture

To avoid unnatural size relationships in pictures of people, it is customary to use lenses of longer focal length than those used in general photography. A focal length of about one and one half or two times the diagonal of the negative is suggested for head-and-shoulders portraits, while a somewhat shorter focal length is adequate for three-quarter length and full length figures. In small studios, however, it may not be possible to meet these ideal conditions. Then, the photographer should try to keep the depth of the subject to a minimum to avoid unnatural perspective, or drawing. The following table gives suggested lens focal lengths and minimum working distances for various kinds of portraits taken in the studio. These suggestions are not necessarily ideal, but they are the minimum distances in which the work can be done satisfactorily.

Soft-Focus Lenses

Although the question of whether or not to use a soft-focus lens may be a matter of personal preference, high-quality portraits are rarely made with ordinary, sharp commercial lenses. Such lenses record every wrinkle, line, and blemish in the skin. As a result, the portrait is somewhat crude unless the sitter has practically flawless skin. Otherwise, an inordinate amount of skillful retouching may be needed to make the picture presentable.

Unnatural size relationships result from using a lens with a focal length too short for the format.

Working Distances for Portraiture

Film Size (in inches)	Type of Portrait	Suggested Focal Length*	Minimum Working Space† (in feet)
4 x 5	Head and Shoulders	8½ to 10 in.	15
	Full-Length Figure	6 in.	16
	Groups 10 Feet Wide	100mm (Wide field)	18
5 x 7	Head and Shoulders	12 to 14 in.	15
	Full-Length Figure	8 to 8½ in.	15
	Groups 10 Feet Wide	135mm (Wide field)	16
8 x 10	Head and Shoulders	14 to 16 in.	15
	Full-Length Figure	12 in.	17
	Groups 10 Feet Wide	190mm (Wide field)	18

*Not using camera swings.

†These values assume the image occupies 90 percent of the negative dimension and include an allowance of about 7 feet for lights, background, and camera working room.

A sharp lens yields a rather harsh portrait that needs a considerable amount of negative retouching.

A soft-focus lens gives a pleasing result and helps to minimize facial lines and skin blemishes.

Soft-focus lenses are specially designed to leave a moderate residue of spherical aberration. The effect of such aberration is to image a point, not sharply as with an ordinary lens, but with a halo of decreasing intensity around it. The effect is to diffuse and reduce the contrast of fine detail in the image. Remember that putting a lens out of focus does not achieve this effect. With most soft-focus lenses the amount of spherical aberration, and therefore the degree of softness, can be controlled either by stopping the lens down or by altering the separation between the component elements. Some older portrait lenses, however, relied on a measure of chromatic aberration to achieve softness; this type of aberration is not affected by reducing the lens aperture. If a soft-focus lens is not available, diffusing discs placed over the camera lens can be used to give a similar effect. Diffusing discs can also be used with an enlarger lens to achieve soft focus, but this method degrades the image, and it should only be used as a last resort to improve a harsh result.

Portrait lenses are generally used at a fairly large aperture, because too great a depth of field is not usually an advantage. In a head-and-shoulders portrait the depth should be just sufficient to render the tip of the nose and the eyes in focus, while anything behind this point is allowed to become progressively softer. Otherwise the effect may suggest a cutout pasted on the background. In using sufficiently large apertures to maintain a short depth of field, it is sometimes necessary to reduce exposure without altering the lens stop. In this situation, neutral density filters over the lens can be used to control exposure. A table of neutral density values and exposure increments, in lens stops, is given on page 44.

PHOTOGRAPHY OF SMALL OBJECTS

Close-up photography, ultra close-up photography, and photomacrography are terms that are encountered in the literature describing the photography of small objects. The terms close-up and ultra close-up are somewhat elastic, but photomacrography usually means the making of images the same size as, and up to magnifications of about 25 times the size of the object with simple optical systems. In photomacrography, magnification is limited by the resolving power of lenses when they are used in this way; and by practical considerations, such as extremely long bellows extensions, long exposure times, and the difficulty in keeping the setup rigid enough for critical sharpness.

In making magnifications of unity (1:1) and greater, optical conditions different from those that exist in ordinary photography must be taken into consideration, although the lens and camera may be the same. The easiest way to understand these differences is to compare a camera set up for photomacrophotography with an ordinary enlarger. The two optical situations are essentially the same. In the former, an enlarged image of a small object is being recorded on a sensitized material; in the latter, an enlarged image of a negative is being recorded. The lens-to-easel distance in the enlarger corresponds to the lens-to-film distance in the camera, and the lens-to-negative distance in the enlarger corresponds to the lens-to-object distance in using a camera. As in enlarging a negative, exposure increases with magnification, so exposure increases with magnification when the image of a small object is enlarged with a camera. In both cases, it's just a matter of increasing distance.

In close-up photography optical conditions are different from those that exist in ordinary photography.

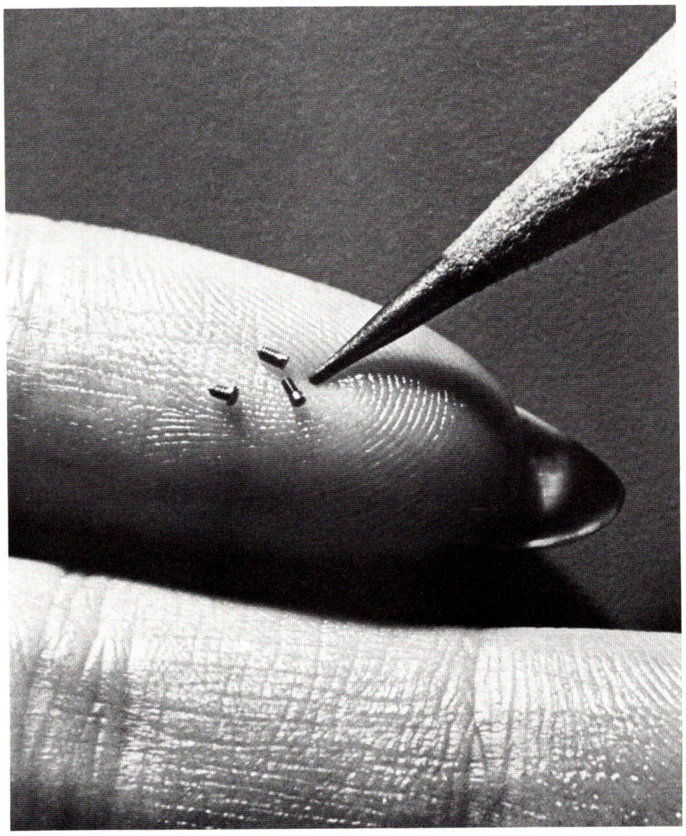

Exposure in Small-Object Photography

The exposure required to compensate for increased lens-to-film distances can be calculated by using the following formulas:

Indicated *f*-number $\times (M+1) =$ Effective *f*-number

Where indicated *f*-number is that obtained by ordinary exposure calculation and M is the magnification or ratio of image to object size.

To obtain the exposure required by the effective *f*-number:

Indicated exposure $\times (M+1)^2 =$ Exposure required

Lenses for Small-Object Photography

Most camera lenses are designed to yield their best performance when the lens-to-film distance approximates the focal length, as is usual in ordinary picture-taking situations. When the lens is used for close-up and macro work, where the lens-to-film distance is considerably greater than the focal length, some loss of definition and flatness of field may be noticed. The amount of such loss depends on the particular lens. An improvement in performance can be obtained by mounting some lenses so that the rear element faces the object being photographed. Reversing adapters are obtainable for many lenses, but in critical work and work involving high magnification, a specially corrected lens, usually called a macro lens, is preferable.

As mentioned earlier, the covering power of a lens is important in ordinary photography; that is, the circle of illumination thrown by a lens must be large enough to cover the film adequately. In close-up and macro situations, where the image is larger than the object, a particular lens covers a much larger film, depending on the degree of magnification. Again, a macro setup can be compared with an ordinary enlarger to clarify this point. If the focal length of an enlarger lens equals the diagonal of the negative, the circle of illumination at the easel covers the enlarged image whatever the magnification. By the same token, if the focal length of the camera lens is equal to, or perhaps a little greater than, the longest dimension of the object, the circle of illumination will usually be sufficient to cover the object however much it is magnified. This situation becomes clear when it is understood that the circle of illumination is enlarged in the same way as the image of the object.

Depth of Field in Small-Object Photography: As an image of a small object is magnified, so the depth of field becomes smaller, and at high magnifications it becomes difficult to obtain acceptable definition in the nearest and farthest parts of the object. Depth of field is improved by stopping the lens down, but critical definition may be impaired if the aperture is too small. In other words, the effect of diffraction on sharpness will be felt if the lens is stopped down too far. This is particularly true in using lenses of short focal length, because the physical size of the aperture—irrespective of *f*-number—is smaller as the focal length decreases.

Remember that in close-up work, focusing must be carried out by moving the entire camera backwards or forwards; not by moving the lens or the camera back separately.

If depth of field is not sufficient for an object at a particular magnification, it is preferable to make the image smaller to obtain more depth and to rely on enlarging to get the required magnification.

Supplementary Lenses

Positive supplementary lenses, or close-up attachments, provide a useful means of getting a larger image than can be obtained with cameras or lenses with limited focusing movements. These lenses effectively reduce the focal length of the camera lens with which they are used.

In large-format photography generally, both negative and positive supplementary lenses are used in situations where a slight change in the focal length of a lens is an advantage. For example, when the camera position cannot be changed for some reason and you need to make the image a little larger or a little smaller to fill the negative area; then, a positive or a negative supplementary lens would make the necessary change.

Supplementary lenses are usually specified by their power in diopters, rather than their focal length. The diopter is the power of a lens having a focal length of 1 meter. A 2-diopter lens has a focal length of ½ meter, and so on. The powers are additive; for example, a 1- and a 2-diopter lens together give a 3-diopter lens, or a focal length of approximately 13 inches. Note that when the camera lens is focused at infinity and a supplementary lens is used, the lens-to-object distance equals the focal length of the supplementary lens, regardless of the focal length of the camera lens.

The use of low-power supplementary lenses does not seriously affect the corrections of the camera lens, particularly those of medium to long focal length. In fact, a slight improvement in sharpness might be noticed if the camera lens happened to be a poor performer at close-up distances, but in any case, sharpness is improved when the camera lens with a supplementary attachment is stopped down to *f*/8 or *f*/11. As with all close-up work, the depth of field when using positive supplementaries is very small; consequently, the camera should be focused with great care.

The *f*-numbers marked on the camera lens are not affected by the use of a positive supplementary lens, because the lens-to-film distance is reduced. Remember, however, that the angular coverage remains constant; there is no wide-angle effect in this situation. Only when the camera lens has covering power in excess of that needed to cover the film can the lens-to-film distance be reduced with a supplementary lens in position.

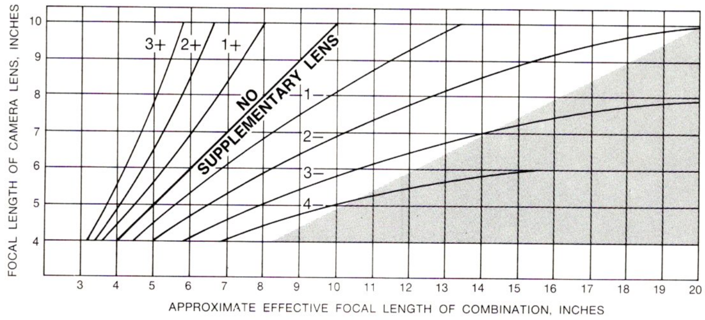

In this table of combined focal lengths, combinations in the shaded area require more than double bellows extension. Combined focal length should be shorter than the bellows length.

GROUP PHOTOGRAPHY

In photographing groups that consist of more than just a few people, always use the longest focal-length lens that studio space permits. Otherwise, the figures at the extreme ends of the group may be broadened in a lateral direction. The effect is characteristic of wide-angle lenses, and is sometimes referred to as wide-angle distortion. Strictly speaking, this is not distortion in the ordinary sense; rather, it is the effect of viewing the subject from a fixed point of perspective. When cylinders, spheres—and human heads—are viewed thus, they appear wider than they should be. The accompanying drawing explains this point.

When it becomes necessary to photograph a group in a confined space, the wide-angle effect can be reduced by placing slim individuals at the ends of the group and by turning them slightly so as to face the camera.

The focal length of a lens considered normal for a given format includes an angular field of about 50 degrees. At this angle, the image of a spherical object is about 10 percent wider than the same object would be at the center of the field. This degree of elongation is tolerable, but when the lens covers a much wider angle, say 70 degrees or more, the widening is 30 percent, which is obvious and objectionable in a human figure.

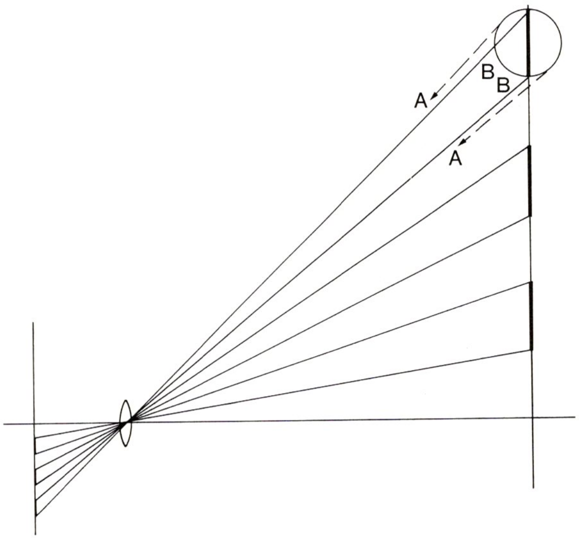

Spheres, cylinders and objects of similar shape appear elongated when they are placed near to the edge of the field of a wide-angle lens. The lines AA represent rays from the outer sides of round, solid objects. The lines BB represent rays from the sides of flat objects.

Group Photography Outdoors

Large groups are more often than not photographed out of doors, although the job can be done in a large ballroom or in a reception hall. However, lighting can be a problem if the group is a large one. The photography of large groups is a skilled operation that requires a certain amount of forethought and prior arrangement. The procedure to follow is outlined in the following section.

First, you will need chairs or benches for people in the first row to sit on. Bear in mind that dignitaries—sales managers, distinguished guests, and the like—will be seated in the front row. You will need to find out beforehand who these people are. The second row stands on the ground, and the third and any further rows will stand on benches, or bleachers, each being 8 inches higher than the row in front of it. Any stands used for this purpose must be constructed so that they can support the weight of the people. A stand 16 feet in length is needed for each 10 people. The stands should be made in convenient lengths for easy handling. Alternatively, you can use a flight of steps, such as those found in front of some buildings or in parks. Thus, you will save a great deal of time and effort.

Composing a Group

In some cases it is possible to take an informal group photograph with the people standing on a slight incline that slopes towards the camera. A high camera position is needed and care must be taken to be sure that all the faces are visible. The accompanying illustration of a group of young girls is an example of this arrangement.

If the arrangement of the group is intended to be formal, care is necessary to avoid a ragged or untidy appearance. First, determine the number of people that will be in the group, and then make a sketch of the arrangement. Thus, you will have a mental picture of the group before starting to work on it.

When the stands are in position, the first step is to call out for people 6 feet 6 inches tall or taller; place these people at the center of the back row. Then call for people an inch or so shorter until the back row is complete, with the figures gradually becoming shorter towards the ends. Compose each succeeding row—if any—in the same way. The rows should be "staggered" so that each head in a back row appears between two heads in the one in front of it. Avoid placing stout people at the ends of the front row.

Careless posture of people in the front row can

This informal arrangement of a group was appropriate in the circumstances. Note the high camera position and the oblique backlighting.

make a group appear untidy. Direct these people to cross their feet—right foot over left—and ask them to place their hands in a uniform position.

Exposing Group Photographs

Choose the largest format that you have available and a relatively long focal length lens. An 8 x 10-inch film with a 12-inch or 14-inch lens is a good combination. There are two reasons for using a long focal length in taking group photographs. One reason, of course, is to avoid the wide-angle effect mentioned earlier. The other reason is that the steep perspective given by a short focal length might so reduce the width of the background in relation to the group that unwanted background objects would be included in the picture. Remember that the distance between the group and the background also has a bearing on this relationship. By the same token, a lens with a short focal length can be used to reduce the size of an overpowering background, but only insofar as wide-angle distortion can be tolerated.

Since daylight is unpredictable in many latitudes, give some thought to alternative sites where the picture can be taken. Avoid having the sun shine directly onto the faces of people in the group. Rather, choose the shady side of a building or some similar location. If the sky is overcast or cloudy-bright, light is not a problem, but if you must take the photograph in bright sunshine, do so in the morning before the sun is too high or too hot. Place the group in such a position that the sun provides an oblique backlighting. The accompanying group photograph illustrates this point. To avoid flare, always use a deep lens hood with the sun in the position just described.

A group of people consisting of several rows constitutes an inclined subject plane which slopes away from the camera position. Sharp focus can, therefore, be obtained over this plane by tilting the lensboard forward. Thus, the lens need not be stopped down to a small aperture to get a depth of field sufficient to include all the rows in the group. To avoid distortion—particularly the convergence of vertical lines in the background—the camera back should be kept in the vertical position.

In making the exposure, watch for people with their heads turned away from the camera and those with their eyes closed, as well as for untidy posture of people in the front row. Try to be sure that no one's face is obscured by those in front of him. Make as many exposures as seem necessary to satisfy these conditions.

USE OF FILTERS

Filters for camera use are made from glass (dyed in the mass), gelatin, gelatin cemented between optically ground and polished glass, or those made from glass laminated with a bonding material which contains the color. Glass filters are widely used in pictorial photography, but the range of available colors is rather limited, principally because of economic reasons. If a wide range of spectral transmissions is required, dyed gelatin filters, cemented between glass or otherwise, can be used.

Optical Properties of Filters

The use of a filter nearly always involves an increase in the normal exposure, because a part of the effective exposing light is absorbed by the filter. The number by which the normal exposure must be multiplied is called the filter factor. Filter factors for commonly-used filters are given in the instruction sheets that accompany Kodak black-and-white films. Exposure increases caused by the use of light-balancing filters with color films are usually given as exposure indexes.

Gelatin filters (not cemented between glass) do not significantly affect the definition or the focus of a lens if they are clean and flat. A dirty or finger-marked filter has the same effect on image quality as a dirty lens, and for the same reason. Up to three thicknesses of gelatin filter material can generally be used without affecting the image. This is true whether the filter is placed in front of or behind the lens. Glass filters, whether dyed in the mass or cemented between glass, have a small effect on the image-forming rays, the extent of this effect depends on the thickness of the filter and its position relative to the lens. When a glass filter is placed in front of the lens, which is its normal and most convenient position, the effect on the focus position is negligible, but a thick glass filter placed behind the lens alters the focus by an amount about equal to one third the thickness of the filter. In most applications, this shift is not important, but in close-up work, where focus is critical, the camera should be focused with the filter in position.

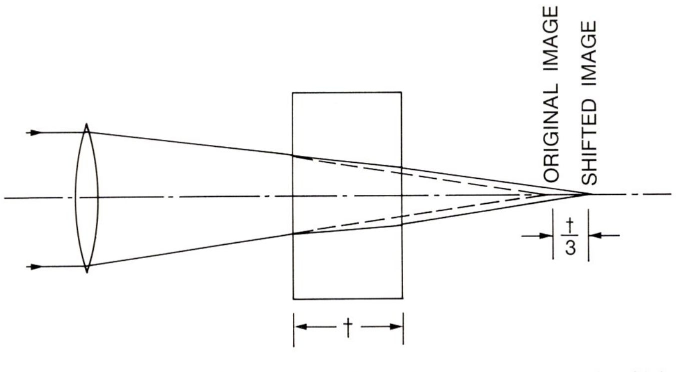

A thick glass filter shifts the image by about one-third the thickness of the glass.

Filters in Color Photography

In color photography, filters are most often used to balance the color quality of the light source with that for which the film was designed. The correct filter to use depends on the light source and, of course, on the type of color film in the camera. Information about using filters with a particular color film is usually given in the instruction sheet packaged with the film. Details on the use of filters with various Kodak color films are also given in *KODAK Color DATAGUIDE,* publication No. R-19, which is available from photo dealers.

Another type of filter is sometimes used with color films to reduce the bluish appearance of some scenes, such as landscapes or seascapes, in which there is a large amount of ultraviolet radiation. Since this radiation has an effect on the film similar to that of blue light, an ultraviolet absorbing filter reduces the overall blue effect. With Kodak color reversal films, the correct filter to use for this purpose is Kodak Filter No. 1A (Skylight). No increase in exposure is required with this filter.

Filters in Black-and-White Photography

In black-and-white work, the main reason for using a filter is to control the gray-tone reproduction of colors so that they are rendered in luminosities similar to those in the original scene. Since such rendering is largely a subjective matter, the choice of filters is dictated by the purpose of the picture or by the photographer's preference.

Filters for controlling gray-tone reproduction can be divided conveniently into two different kinds: correction filters and contrast filters. Correction filters are usually those that make minor alterations to the rendering; contrast filters are those that have a more pronounced effect in changing the balance of tones in the photograph.

As a guide in selecting filters, remember that to darken a tone, use a filter of the color complementary to the color of the object—for example, a yellow filter darkens a blue sky—and to lighten a

A dark sky is generally effective in black-and-white photographs of light-colored buildings. This picture was taken with a red filter. The negative was made on KODAK TRI-X Pan Professional Film 4164 (ESTAR Thick Base).

tone, use a filter similar in color to the object. Selection of the most suitable filter for multicolored objects requires some judgment, but if the scene is examined visually through various filters some idea of the gray-tone rendering can be obtained. The filters most often used to obtain a pleasing rendering in daylight are yellow and yellow-green. These filters do not increase contrast greatly.

Contrast Filters: A number of colors that have considerable visual contrast in a color picture are often indistinguishable from one another in a black-and-white photograph. For example, green and orange are contrasting colors, but they photograph in black-and-white as similar tones of gray. This situation calls for the use of a contrast filter to make one color appear lighter—or darker—than the other. In the example just mentioned, a red filter will absorb green and so render it darker than the orange. Alternatively, a green filter can be used to obtain the reverse effect. Tables of filters for gray-tone correction and for increasing contrast are given at the end of this section.

Haze Reduction in Black-and-White Photographs

Although atmospheric haze is a desirable indication of distance in pictorial photography, too much haze obscures distant objects completely in a black-and-white photograph, although the details may be quite visible to the eye. This is because the invisible ultraviolet radiation is scattered by haze, and is recorded by black-and-white films as visible haze. Yellow, deep yellow, and red filters are used with panchromatic films for haze penetration. Greater penetration can be obtained with infrared-sensitive films used with appropriate filters. For more information about the use of infrared films, refer to Kodak Publication No. M-28, *Applied Infrared Photography.* Remember that mist and fog are composed of water droplets and cannot be penetrated by any combination of film or filters.

Polarizing Screens

These screens, or filters, polarize the light passing through them so that all the vibrations lie in one direction. Polarized light has unusual reflecting properties that can be valuable in certain photographic situations. For example, light reflected obliquely from glass or still water is partly or almost completely polarized according to the angle of incidence and the refractive index of the reflecting material. Light so reflected can be extinguished by means of a polarizing filter over the camera lens when the screen is rotated to the proper orientation. The desired position can usually be found by looking directly through the screen and then rotating it until the best position is found.

Polarizing screens work only with polarized light because such light vibrates in one direction only and the screen can extinguish it only when the plane of polarization of both light and screen are at right angles to one another. Remember that reflections from metal objects do not usually consist of polarized light and therefore they cannot be eliminated in the manner described. In color photography, the only practical way of controlling the brightness of a blue sky is with a polarizing filter. The maximum darkening effect is obtained when the sun is at right angles to the line of sight. Also, when the sky is very clear the effect is greater than when the sky is hazy. In architectural work, a polarizing screen makes possible considerable control over the relative brightness of building surfaces, as well as of the sky. Again, the effect is greatest when the sky is very clear.

Reflections from metallic surfaces—polished metal; metals coated with transparent lacquer, oil, or water; metallic pigments, such as aluminum or bronze—are not polarized reflections and, therefore, cannot be extinguished by using a polarizing screen over the lens alone. In the studio, however, by using polarizing screens over the lights as well as over the lens, light reflected specularly from any surface can be subdued, but in some cases it cannot be eliminated.

Exposure with Polarizing Screens: When a polarizing screen is used over the camera lens, an exposure of two and one-half to three times more than normal is required. If screens are used over the lights as well as the lens, an exposure increase of 16 times or more will be needed. The actual exposure for a given situation is best determined by a series of trial exposures, using 16 times as the starting point.

Neutral Density Filters

As the name implies, neutral density filters have no color and, therefore, can be used with any sensitized material. The main purpose of these filters, which are available in a number of different specified densities, is to reduce the amount of light entering the lens when it is undesirable or impracticable to alter the lens aperture or to reduce the intensity of the light source. In portraiture with electronic flash illumination, for example, it is often necessary to adjust exposures without changing the lighting or the film. Moreover, the lens aperture cannot always be reduced appreciably because the increased depth of field may not be desirable. In this and similar situations, the alternative is to use a neutral density filter over the lens.

KODAK WRATTEN Neutral Density Filters, No. 96 (gelatin squares), are available in 2-inch and 3-inch squares. Values higher than those given in the table can be obtained by combining two or more of these values.

Neutral Density Filters and Exposure Compensations

KODAK WRATTEN Neutral Density Filters, No. 96	Filter Factor	Exposure Increase (in lens stops)	Percentage Transmission
ND 0.1	1¼	⅓	80
ND 0.2	1½	⅔	63
ND 0.3	2	1	50
ND 0.4	2½	1⅓	40
ND 0.5	3	1⅔	32
ND 0.6	4	2	25
ND 0.7	5	2⅓	20
ND 0.8	6	2⅔	16
ND 0.9	8	3	13
ND 1.0	10	3⅓	10

Correction and Contrast Filters for Black-and-White Photography

The following table gives a selection of the filters normally used in black-and-white photography and some details of their characteristics and principal uses. The complete range of Kodak filters is not listed, but if a complete listing is required, refer to the publication *KODAK Filters for Scientific and Technical Uses,* No. B-3.

Filters for Black-and-White Photography

Filter Number	COLOR	Description and Uses
1A	Very faint pink	Skylight or haze filter. Absorbs ultraviolet. Use for reducing the bluish cast in color pictures.
2B	Very faint yellow	Absorbs ultraviolet strongly. Use for haze reduction at high altitudes or when excessive ultraviolet is present.
6	Light yellow	Partial correction filter for outdoor scenes with panchromatic films.
8	Yellow	Correction filter for outdoor scenes with panchromatic films. Absorbs ultraviolet and some blue. Yields correct tonal relationship with panchromatic films in daylight.
9	Medium yellow	Absorbs ultraviolet and some blue. Renders blue sky somewhat darker than No. 8.
11	Light yellow-green	Correction filter. Absorbs ultraviolet, some blue, and some red. Gives pleasing tone rendering with panchromatic films in tungsten light. Lightens tone rendering of green in daylight.
12	Deep yellow	Absorbs ultraviolet and blue. Gives strong overcorrection in daylight. Renders blue very dark. Strong haze penetration.
15	Very deep yellow	Contrast filter. Absorbs ultraviolet, blue, and small amount of green. Strongly overcorrects gray tone rendering in daylight.
16	Orange	Contrast filter. Absorbs ultraviolet, blue, and a small amount of green. Strongly overcorrects sky, and enhances detail in brick work and furniture.
25	Red	Standard red filter for color separation. Absorbs ultraviolet, blue, and green. Very strong overcorrection in daylight. Used for haze penetration with panchromatic films, and for blue absorption with infrared films.
30	Light magenta	Contrast filter. Absorbs green.
31	Medium magenta	Stronger green absorption than No. 30.
38	Light blue	Contrast filter. Corrects tendency for reds to reproduce as a too-light gray tone in tungsten illumination.
47	Blue	Contrast filter. Adds the effect of haze to pictorial subjects. Tricolor blue filter for separation work.
58	Green	Standard green filter for separation work. Lightens foliage in outdoor scenes. Particularly useful in close-up photography of green plants.
59	Light green	Contrast filter. Has less blue and red absorption than No. 58.

USEFUL OPTICAL FORMULAS

In your photographic work, have you at times wanted to know what focal-length lens to use when you have a limited subject distance? How much depth of field you'll have for a certain picture? What close-up lens to use for a particular subject size and image size? How about projection distances for slide and movie projectors? You can answer these and many other questions by using the basic optical formulas on the following pages.

To Find the Focal Length of a Lens

Most lenses have the focal length printed on the front or side of the lens mount. The focal length of a normal camera lens (not a telephoto or wide-angle lens) is equal to the distance from approximately the center of the lens to the image plane when the lens is focused on infinity. If you don't know the focal length of a normal lens, you can measure the approximate focal length from a point midway between the front element and the rear element of the lens. This is sufficiently precise for use in the formulas in this book.

You can determine the focal length of a lens more accurately by first focusing on an object at infinity and then focusing on an object close to the camera to obtain a full-size image (unit magnification). Measure the lens-to-film distance at each setting. The difference between the two lens-to-film distances is equal to the focal length. When you use this technique to find the focal length, your camera must have a bellows or extension tubes that permit extending the lens to obtain an image the same size as the subject.

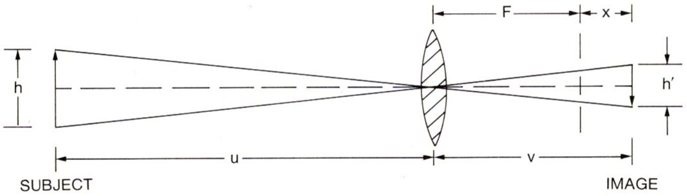

Lens-subject-image positions. For key to symbols, see table below.

Approximate Position of Subject and Image

F = focal length

m = magnification

u = subject distance

v = image distance

h = height of subject*

h' = height of image*

x = distance of image from focal point, or distance that lens is extended from infinity setting.

*You can use width of the subject for h; then h′ becomes width of the image.

All dimensions must be expressed in the same unit of measure.

To convert dimension in	divide by
mm to meters	1000
cm to meters	100
inches to meters	39.4
feet to meters	3.28
mm to inches	25.4

The fundamental relationship between focal length, image distance, and subject distance is

$$\frac{1}{F} = \frac{1}{v} + \frac{1}{u}$$

Formulas that are more directly useful and some examples follow:

Magnification:

$$m = \frac{h'}{h} = \frac{v}{u} = \frac{v-F}{F} = \frac{F}{u-F}$$

Lens movement from infinity position:

$$x = \frac{F^2}{u-F}$$

Lens to image:

$$v = \frac{Fu}{u-F} = mu = (m+1)F$$

Subject to image:

$$u + v = \frac{(m+1)^2}{m}F$$

Lens to subject:

$$u = \frac{Fv}{v-F} = \frac{v}{m} = \left\{\frac{1}{m} + 1\right\}F$$

Example 1: How long must a studio be for you to photograph groups 10 feet wide when you use a lens with a focal length of 8 inches on a 4 x 5-inch camera?

Solution: Allow 4½ inches for image on horizontal axis of negative.

$$\text{Then } m = \frac{h'}{h} = \frac{4.5}{120} = .038$$

$$\text{and } u = \left\{\frac{1}{.038} + 1\right\}F =$$

$$(26.3 + 1)F = 27.3 \times 8 = 218 \text{ inches} = 18+ \text{ feet}$$

This answer gives the lens-to-subject distance. You will also need to add at least 7 feet to allow room for the camera, operator, background separation, etc. The minimum room length is therefore 25 feet. The room width must be at least 15 feet in order to accommodate the group and lights.

Focal length:

$$F = \frac{u}{\left\{\frac{1}{m} + 1\right\}} = \frac{v}{m+1}$$

Example 2: For a studio 20 by 32 feet, and a 2¼ x 2¼-inch camera, what is the longest focal-length lens feasible for photographing a scene 10 feet wide?

Solution: Since you need about 7 feet of room length for working space, the maximum lens-to-subject distance available is 25 feet or 300 inches; u = 300. You should allow at least ⅛ inch of space on either side of the negative. The usable width of the negative is then 2 inches. Since the width of the subject is 10 feet, or 120 inches, the magnification (m) equals 2 divided by 120, or .017. The formula now reads:

$$F = \frac{300}{1/.017 + 1} = \frac{300}{59 + 1} = \frac{300}{60} = 5$$

Answer: 5 inches, or 127mm, is the maximum usable focal length.

Field size (front-element focusing lenses):

$$\text{Field width} = \text{negative width} \times \frac{u}{F}$$

With a normal lens (not telephoto or wide-angle), measuring u and v from a point midway between the front element and the rear element of the lens is accurate enough for practical use. The formulas that do not include v are valid for telephoto lenses and wide-angle lenses when u is large enough so that any inaccuracy in measuring u from the center of the lens is insignificant.

Effective *f*-Number for Lens Extension is greater than the indicated *f*-number because of the increased image distance (lens-to-film distance). When the subject distance, u, is less than 8 times the focal length of the camera lens, use one of the following formulas to determine the required exposure compensation.

Effective *f*-number (for any subject distance) =

$$\frac{v \times f}{F} = f\,(m + 1)$$

$$\begin{array}{l}\text{Exposure}\\ \text{time for lens}\\ \text{extension}\end{array} = \begin{array}{l}\text{Normally com-}\\ \text{puted exposure}\\ \text{time}\end{array} \times \frac{v^2}{F^2}$$

Where v = lens-to-film distance, or focal length plus lens extension from infinity focus, *f* = *f*-number indicated on aperture scale, and F = focal length. For close-up pictures with lens extension, (1) use effective *f*-number for computing your exposure, or (2) compensate your exposure time directly by using the second formula, which includes exposure time.

Depth of Field

Depth-of-field computations are made on the basis of a fixed circle of confusion or on a circle of confusion equal to a fraction of the focal length. Lenses of different focal lengths used at the same *f*-number have the same depth of field for equal image sizes. As a general rule, one-third of the depth of field is in front of the subject and two-thirds is behind the subject. An exception to this rule is extreme close-ups, including those made with close-up lenses, where depth of field is about equal on both sides of the subject.

Method A, fixed circle of confusion:

F = focal length of lens
f = *f*-number of relative aperture
H = hyperfocal distance
u = distance for which camera is focused
d = diameter of circle of confusion

Camera	**Fixed Circle of Confusion Most Widely Used (in inches)**
8mm movie	.0005
Super 8 movie	.00065
16mm movie	.001
135 (24 x 36mm)	.002
126 (28 x 28mm)	.002
Roll-film	.005
4 x 5-inch and larger	F/1720 critical use or F/1000 liberal use

Near limit of depth of field (measured from camera lens) =

$$\frac{H \times u}{H + (u - F)}$$

Far limit of depth of field (measured from camera lens) =

$$\frac{H \times u}{H - (u - F)}$$

Hyperfocal distance (near limit of depth of field when lens is set at infinity):

$$H = \frac{F^2}{f \times d}$$

Method B, circle of confusion a fraction of the focal length of the lens:

u = distance focused upon
0 = angular size of circle of confusion. For critical definition, 0 is 2 minutes of arc and the linear size of the circle of confusion is approximately F/1720 (tan 2′ = .00058).

$$L = \text{effective diameter of lens} = \frac{F}{f}$$

$$\begin{array}{l}\text{Near limit of depth of}\\ \text{field (measured from plane}\\ \text{focused upon)}\end{array} = \frac{u^2 \tan 0}{L + u \tan 0}$$

$$\begin{array}{l}\text{Far limit of depth of}\\ \text{field (measured from plane}\\ \text{focused upon)}\end{array} = \frac{u^2 \tan 0}{L - u \tan 0}$$

Close-Up Lenses

These formulas will help you to find subject distance, depth of field, and field size when you are using close-up lenses.

The following quantities, except s, must all be expressed in meters. The answer will be in meters.

F_S = focal length of close-up lens = $\frac{1}{D}$
D = power in diopters (1+, 2+, 3+, etc) of close-up lens
u = distance from close-up lens to subject
s = focusing-scale setting **in feet**
F_C = combined focal length of camera lens and close-up lens
F = focal length of camera lens
W = field width
w = negative width

Subject Distance

For Infinity Setting:

$$u = F_S = \frac{1}{D}, \text{ for two close-up lenses } = \frac{1}{D_1 + D_2}$$

For Focusing Scale Set at s Feet:

$$u = \frac{1}{\left. D + \frac{3.28}{s} \right\}}\ *$$

To Find s and D for Given u:

$$\frac{1}{u} - D = \frac{3.28}{s}$$

Take highest whole number of D (1, 2, 3, etc) that is not larger than $\frac{1}{u}$. Solve for s.

*3.28/s is "power of focusing scale." This is equivalent to the power of a close-up lens which would cause the same change of focus. For example, changing the focusing scale setting from infinity to 3 feet is equivalent to adding slightly more than one diopter to the power of the close-up lens used.

Combined Focal Length

$$F_C = \frac{F}{1 + FD}$$

Depth of Field for Given u

Use the depth-of-field formulas on the preceding page and substitute F_C for F.

Use the distance from the close-up lens to the subject for u.

For greatest convenience consult the Depth-of-Field Computer in the **Kodak Master Photoguide.**

Field Size

For Infinity Setting:

$$W = \frac{w F_S}{F}$$

For Front-Element Focusing† Lens at s Feet:

$$W = \frac{w}{F\left\{D + \frac{3.28}{s}\right\}}$$

For Unit-focusing† Lens, at s Feet:

$$W = \frac{\left\{\frac{1}{F} - \frac{3.28}{s}\right\}}{\left\{D + \frac{3.28}{s}\right\}}\, w$$

Field height is proportional to negative height.

For Wide-Angle Use—with view-type cameras that permit you to use lens-to-film distances shorter than the lens-to-film distance when the lens is set on infinity.

Width of field with close-up lens =

Width of field without close-up lens × (1 + FD)

†Open the back of your camera and look at the lens while adjusting the focus. If the rear lens element moves, your lens is unit focusing; if it doesn't move, your lens is front-element focusing.

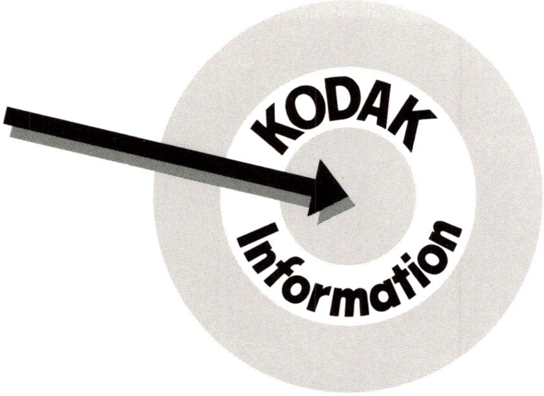

Here's your key to the library . . .

Published annually, the *Index to Kodak Information* lists more than 700 data books, Dataguides, and technical pamphlets, covering topics from acetate films to zoological photography. Anyone with a serious interest in photography will find this key to the Kodak library valuable indeed.

The Kodak library of practical photographic information stems from long-standing awareness that it is not enough to build quality into sensitized materials, chemicals, and equipment. Final results depend equally on the quality of the photographer's information. To put it another way, the quality of a product may be largely wasted if that product isn't used properly.

The *Index to Kodak Information* (L-5) includes a self-mailing order form for the publications it lists. To get your complimentary copy, write to Eastman Kodak Company, Department 412-L, Rochester, N.Y. 14650. Please include both title and code number (L-5).

View Camera Adjustments in Brief

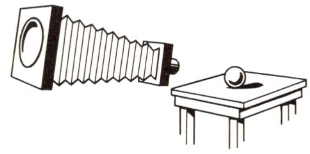

A long bellows draw is required for lenses of very long focal length, or for large images of small objects.

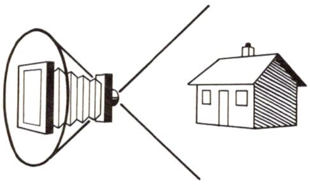

The full use of view camera adjustments requires a lens with adequate covering power.

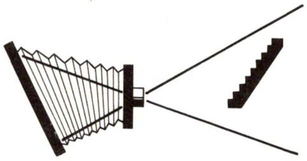

The swing or tilt of the camera back is used to correct the shape of the image or to control perspective.

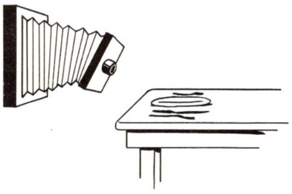

The swing or tilt of the lensboard helps to obtain sharp focus when the principal plane of the subject and the camera back are not parallel.

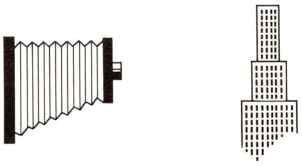

Horizontal and vertical adjustments of the lensboard help to centralize the image on the film.

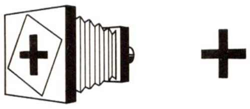

The rotating back rotates the negative as desired to fit the placement of the subject without the necessity of tilting the camera.

EASTMAN KODAK COMPANY • ROCHESTER, N. Y. 14650

Photography with Large-Format Cameras
KODAK Publication No. **O-18**
CAT 152 7894

New Publication 1-73
Printed in the United States of America