AUGUST 1952 PARTS LIST No. 2370A

KODAK MEDALIST CAMERA
KODAK MEDALIST II CAMERA
AND
ACCESSORIES

This revised parts list supersedes all previous parts lists. Parts which are common to both models are identified by part number and name only. Noninterchangeable parts are identified by the camera model. Service Tools are illustrated on pages 19 and 20.

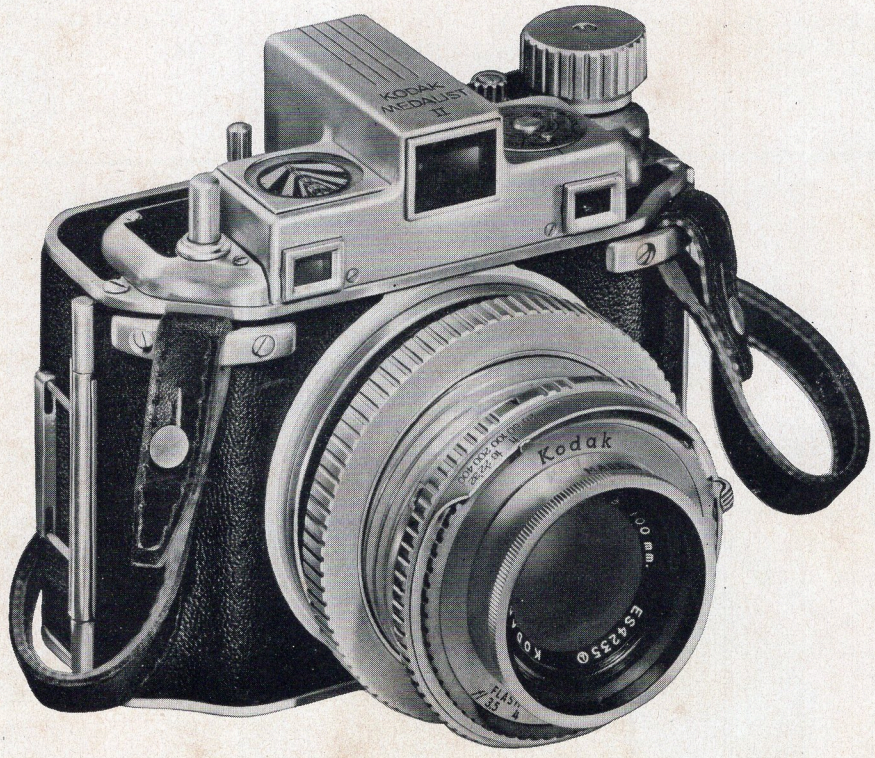

EASTMAN KODAK COMPANY • ROCHESTER 4, N.Y.

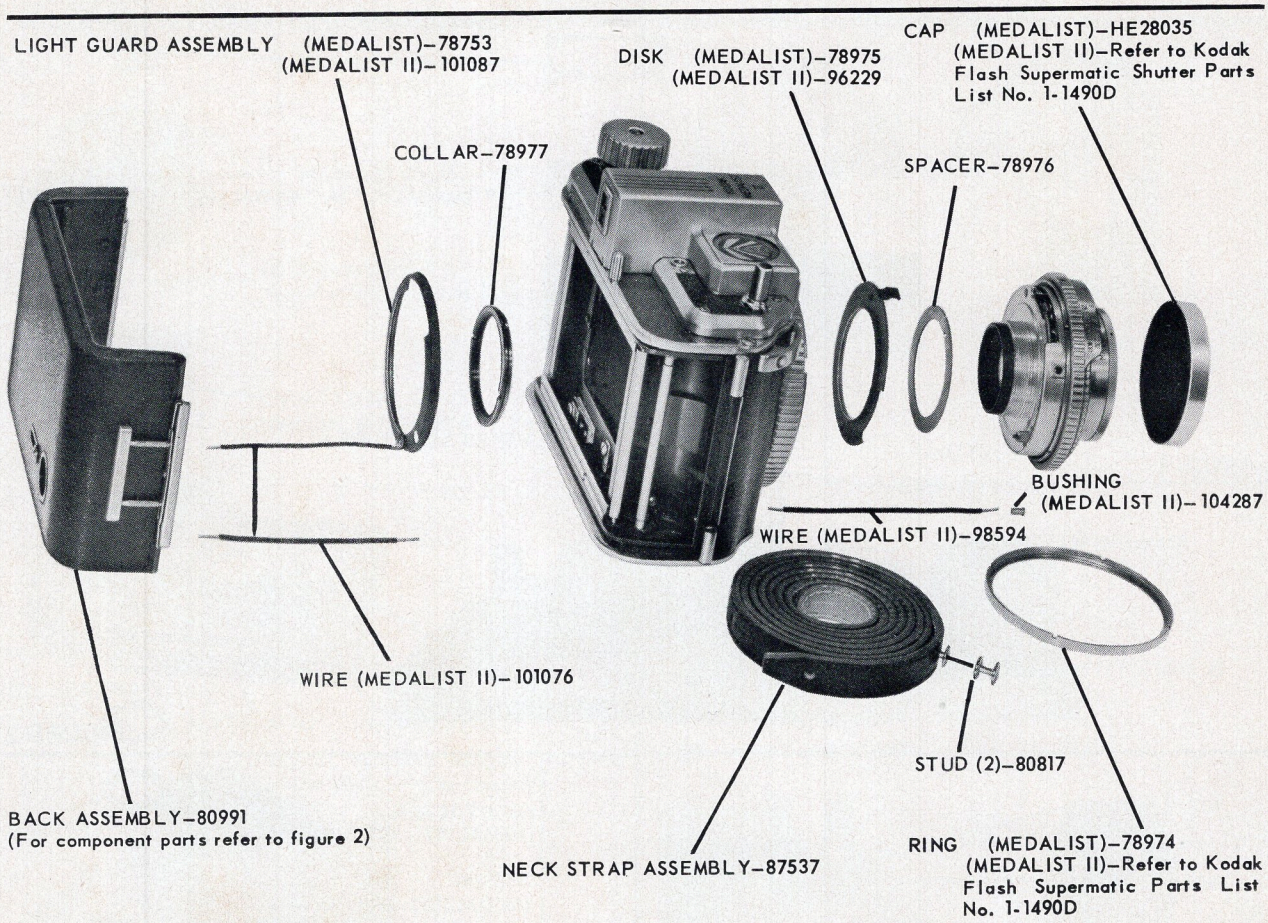

FIGURE 1

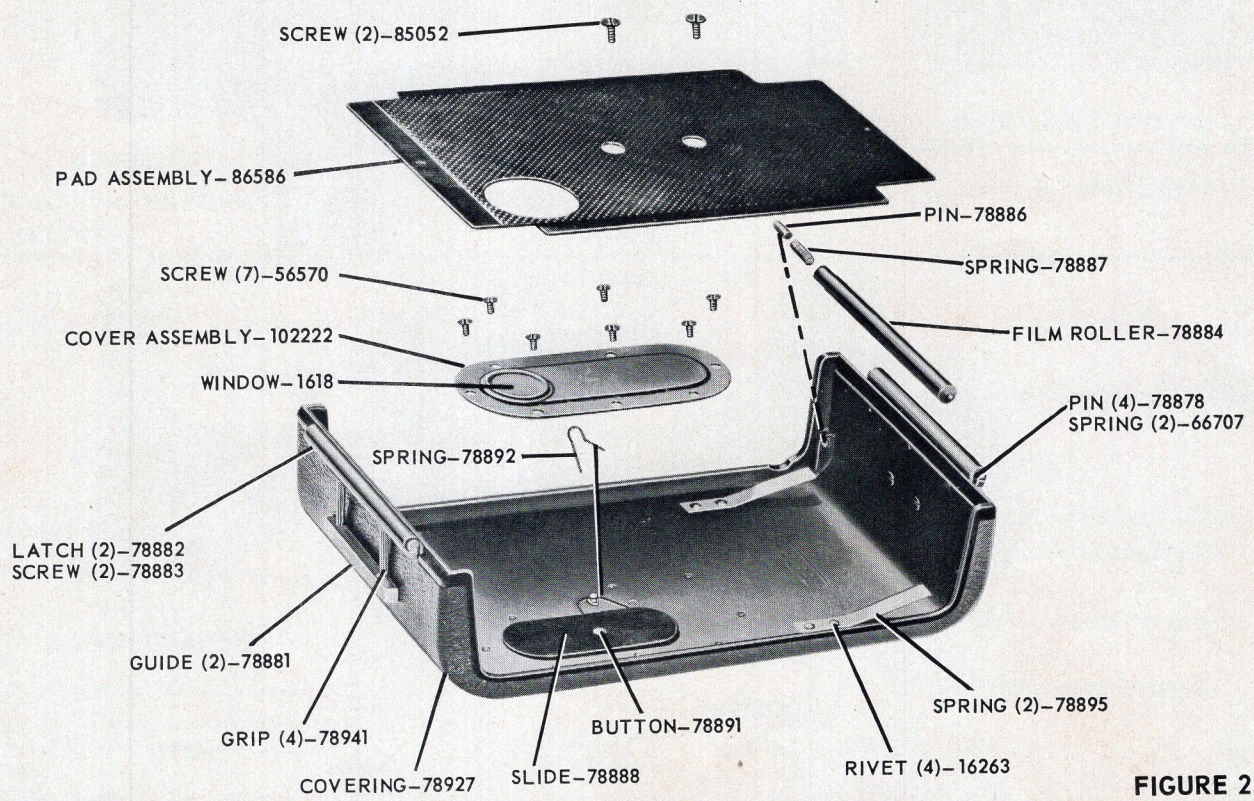

FIGURE 2

Always give PART NUMBER and NAME when ordering parts

Copyright 1952, Eastman Kodak Company
T.M. Reg. U.S. Pat. Off.

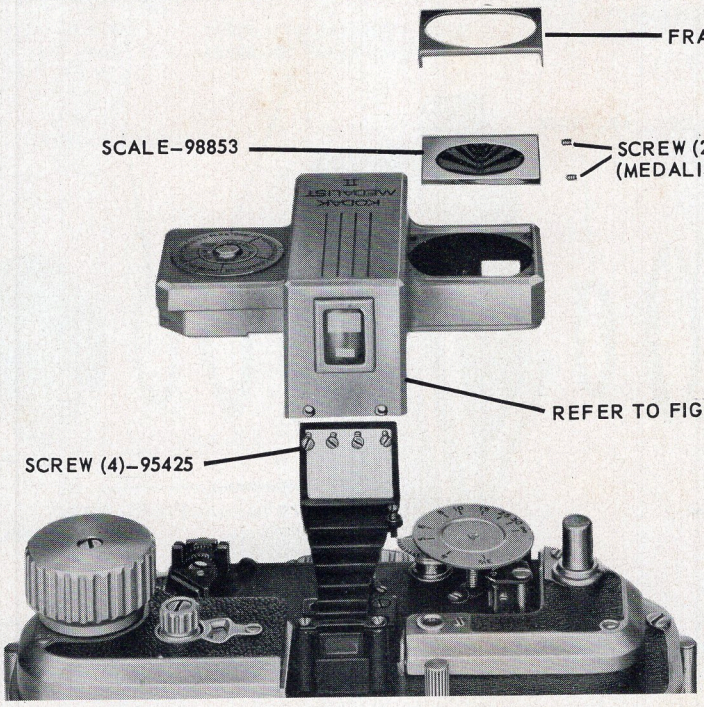

FIGURE 3

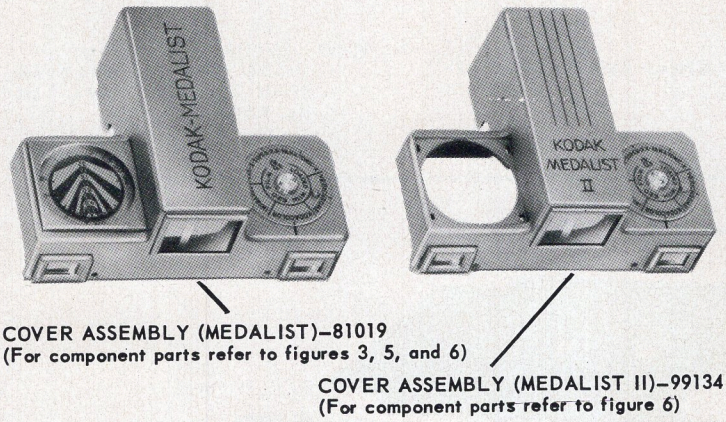

FIGURE 4

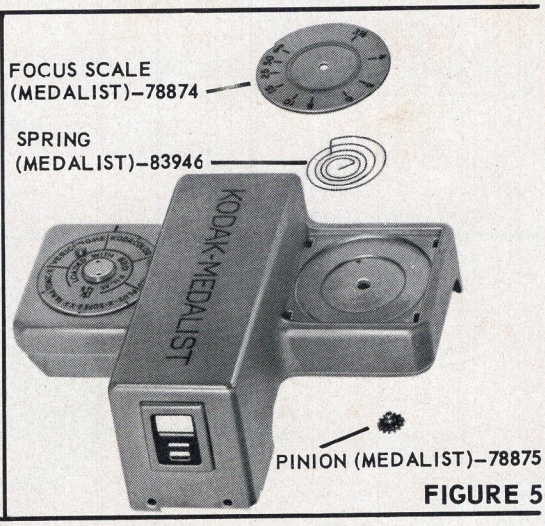

FIGURE 5

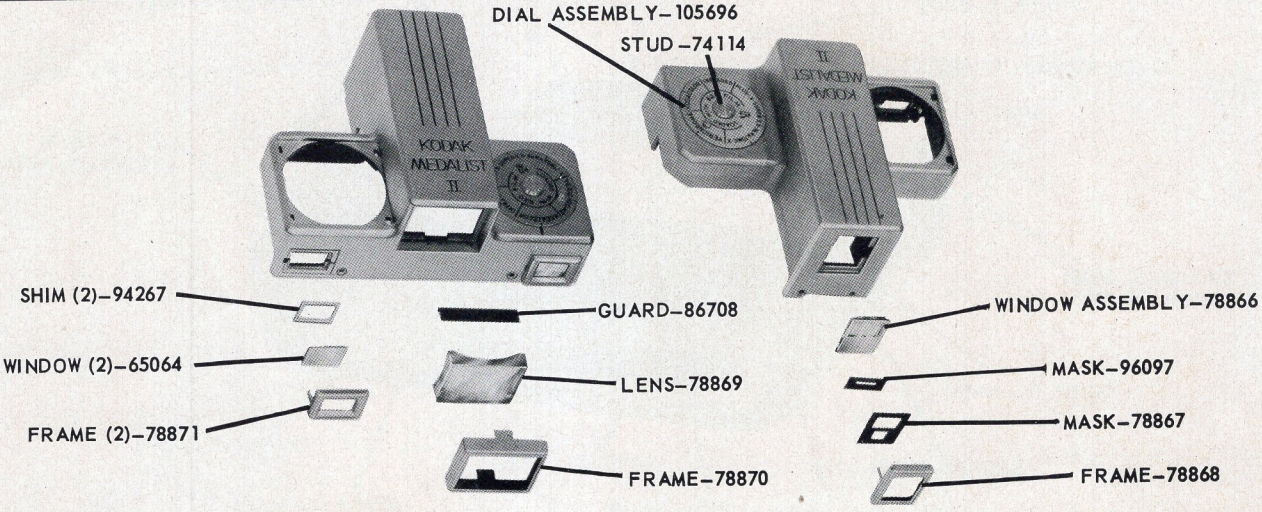

FIGURE 6

Always give PART NUMBER and NAME when ordering parts

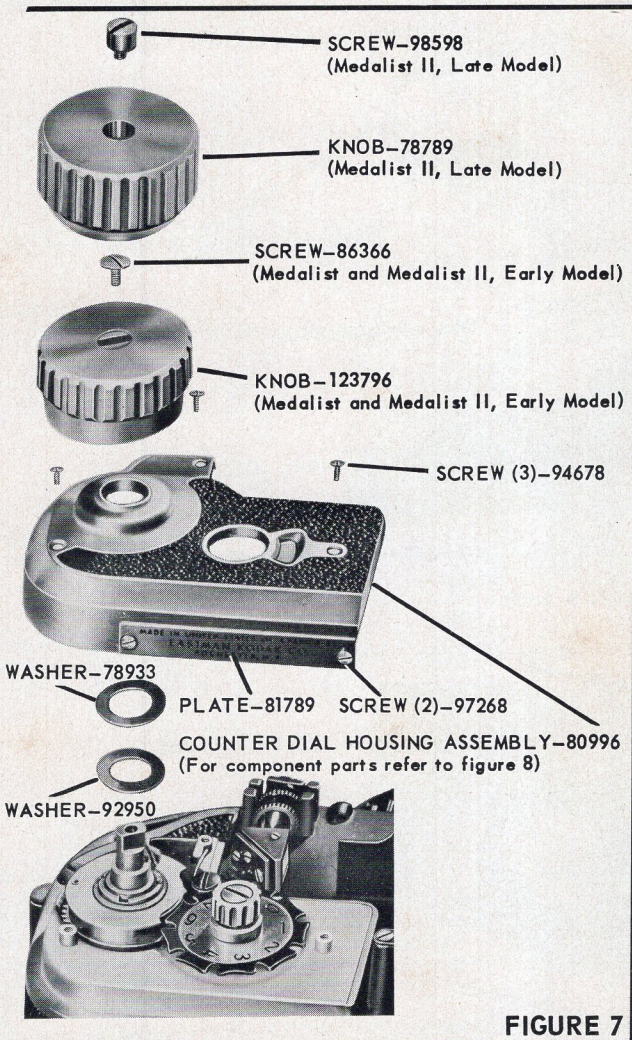

FIGURE 7

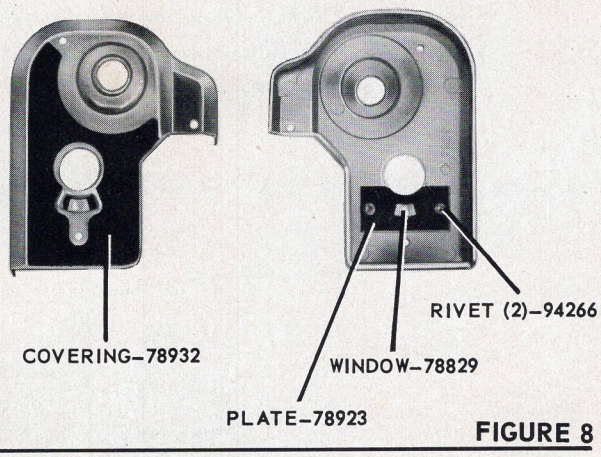

FIGURE 8

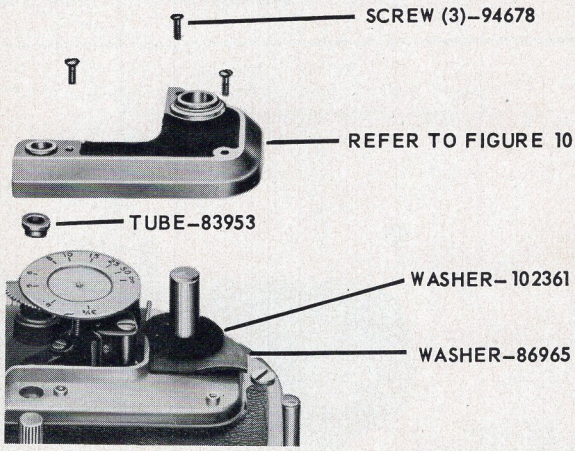

FIGURE 9

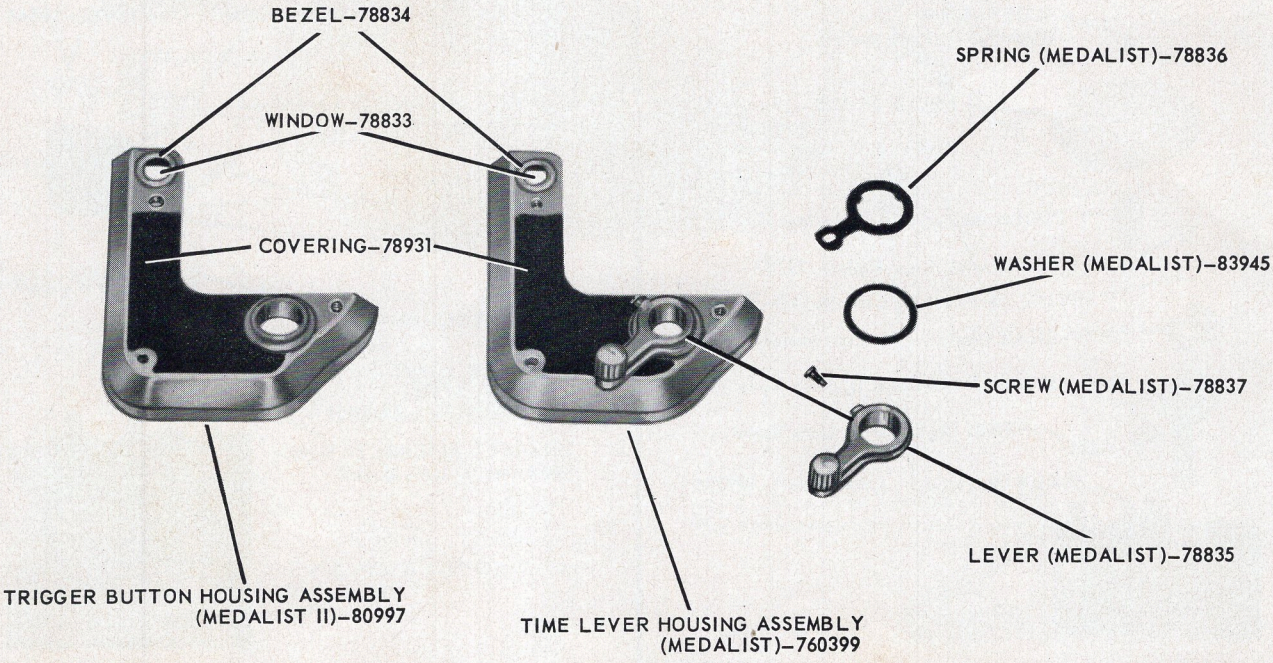

FIGURE 10

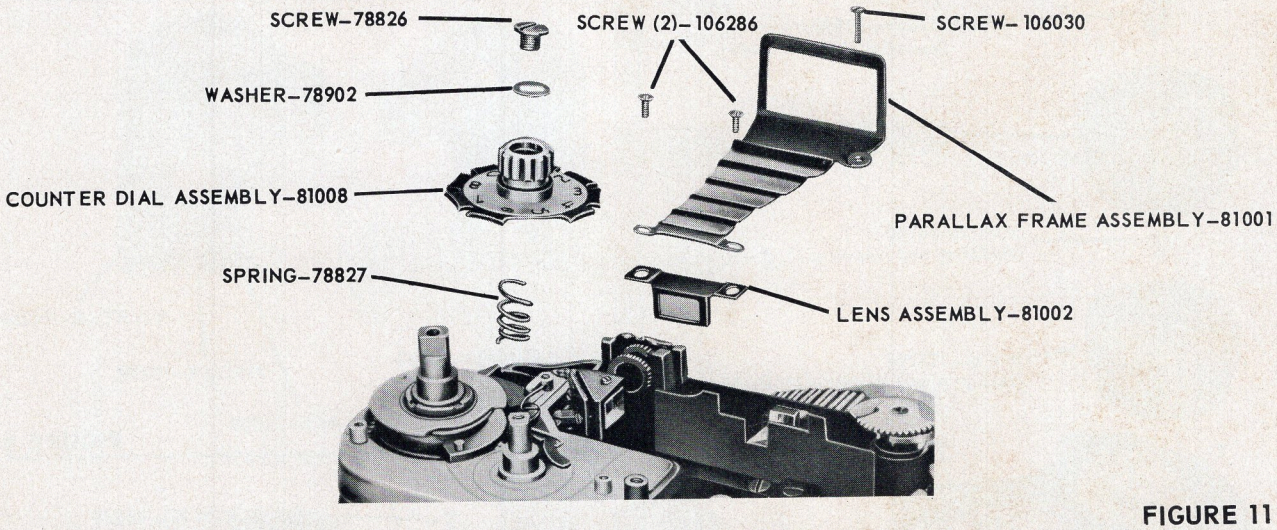

FIGURE 11

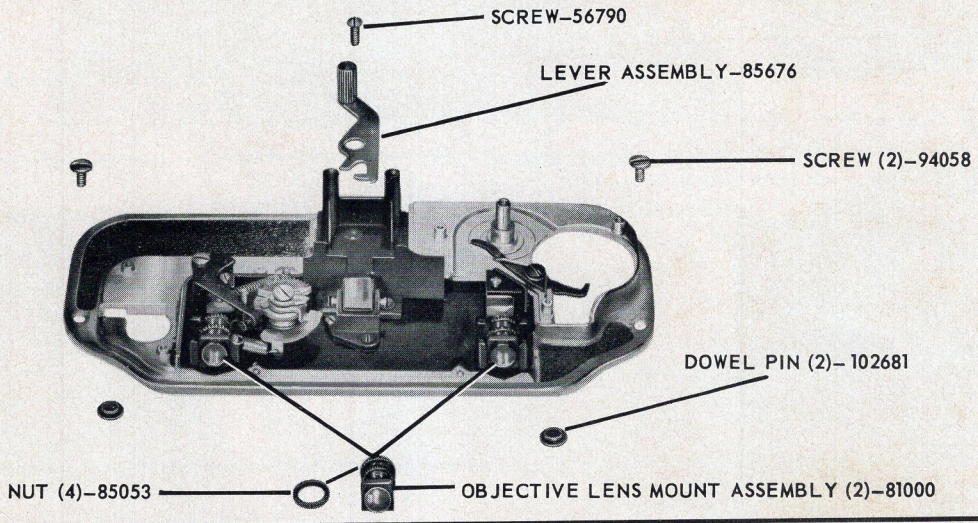

FIGURE 12

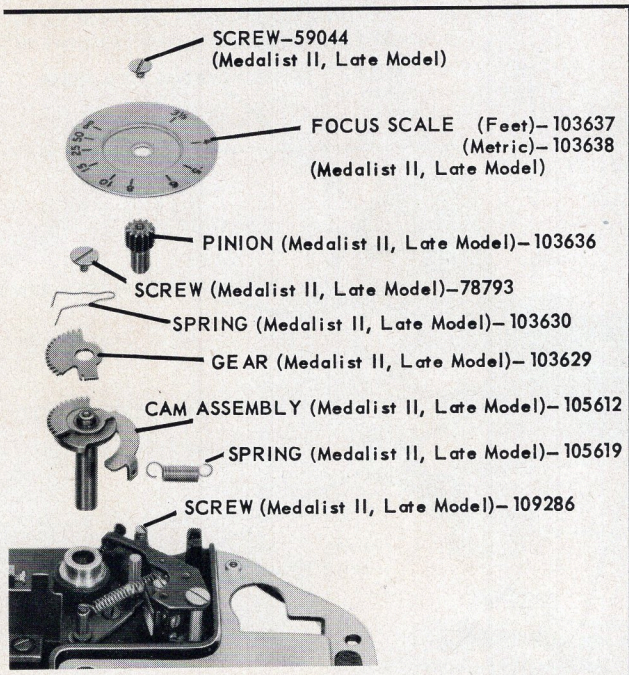

FIGURE 13

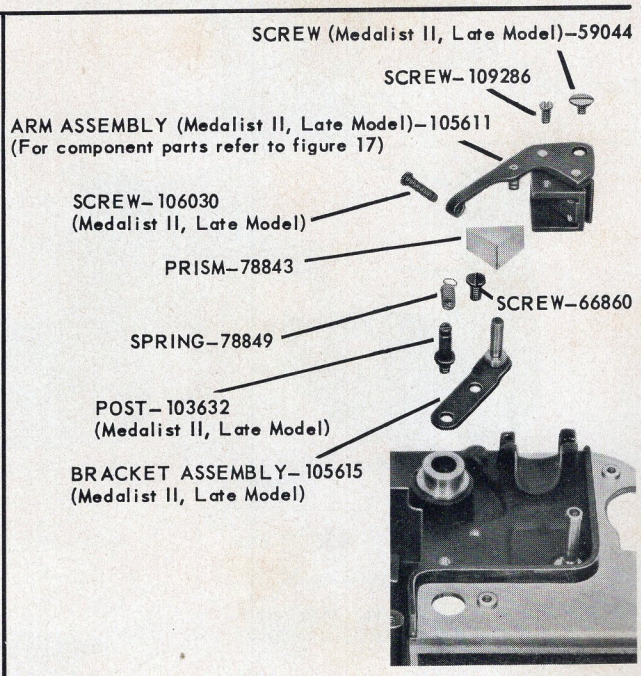

FIGURE 14

Always give PART NUMBER and NAME when ordering parts

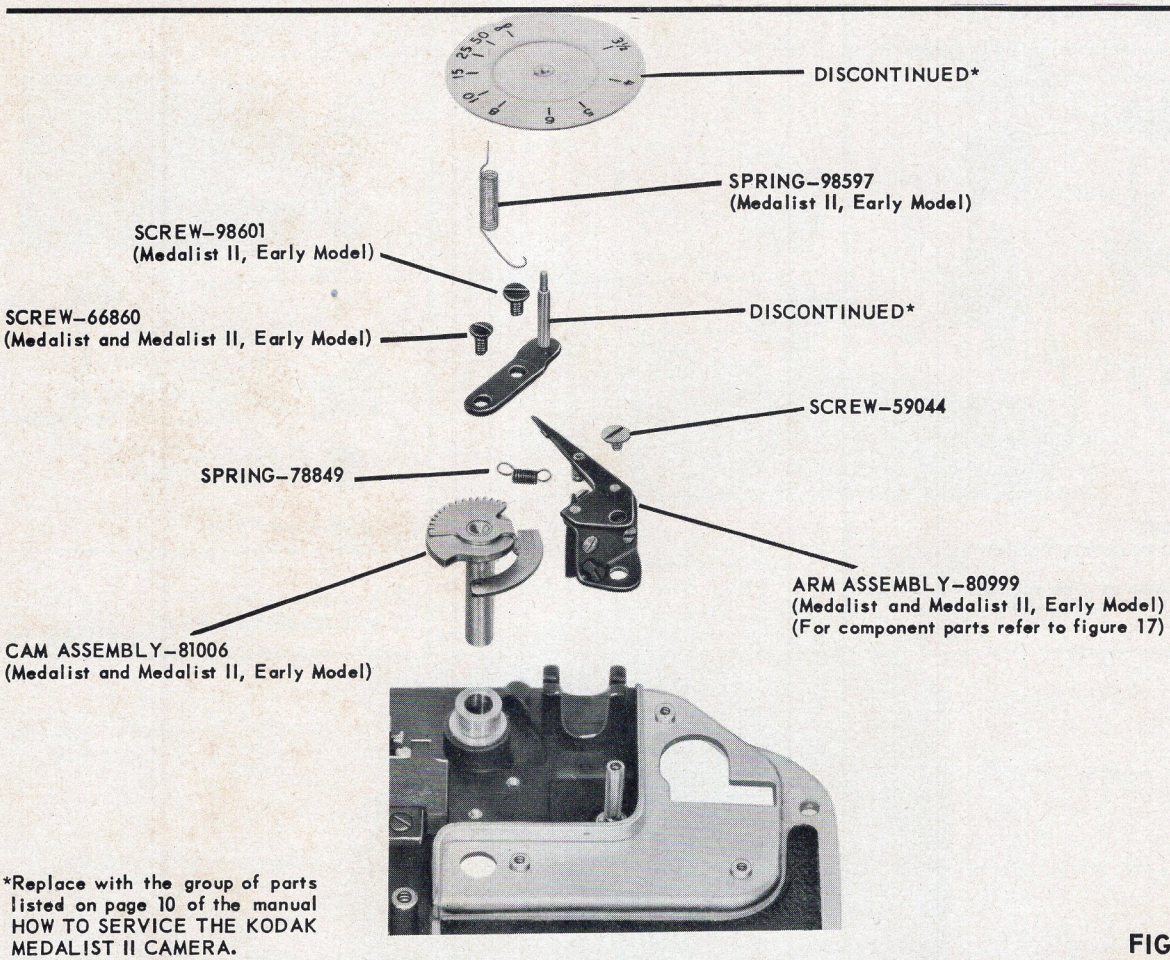

*Replace with the group of parts listed on page 10 of the manual HOW TO SERVICE THE KODAK MEDALIST II CAMERA.

FIGURE 15

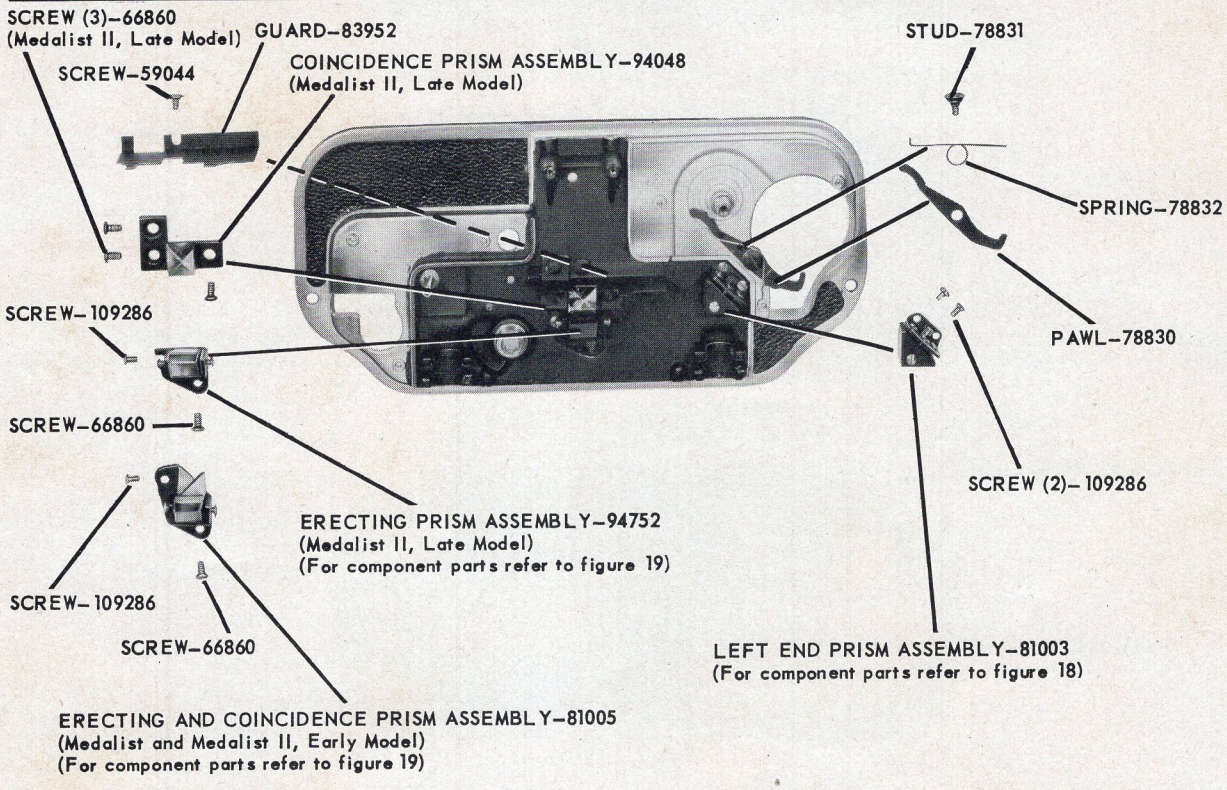

FIGURE 16

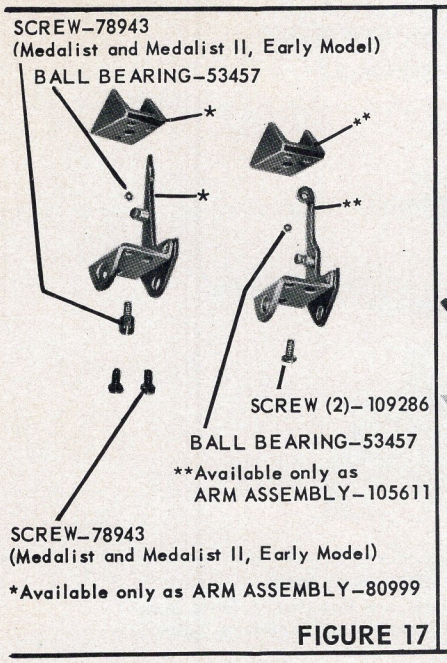

FIGURE 17

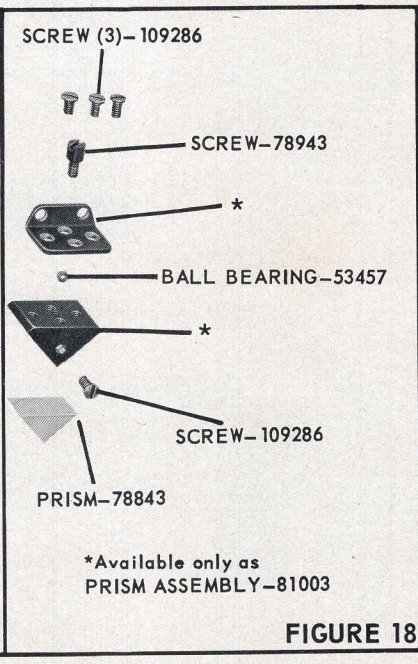

FIGURE 18

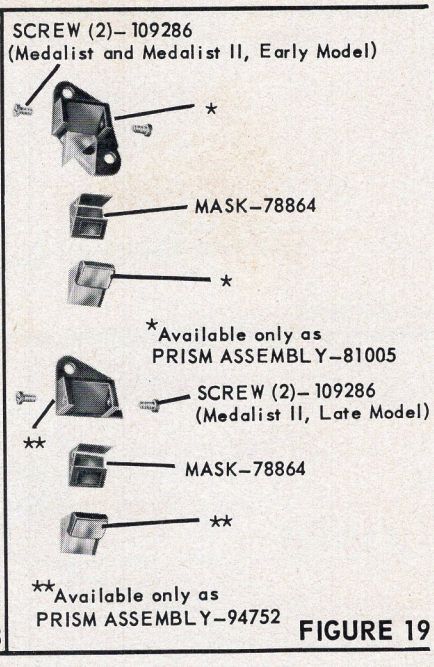

FIGURE 19

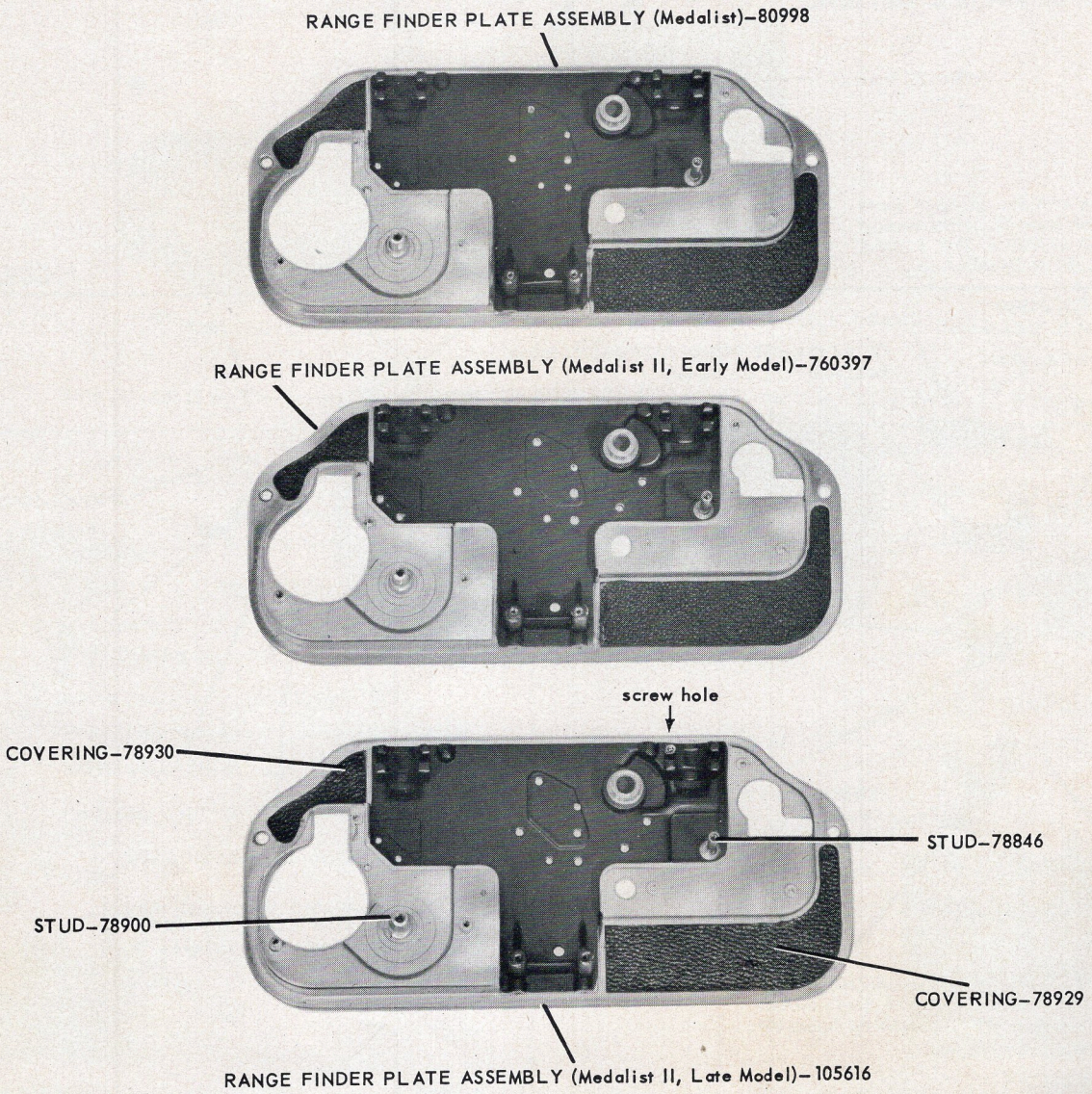

FIGURE 20

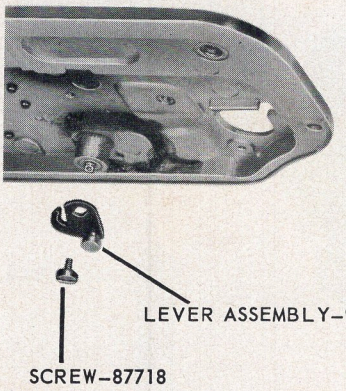

FIGURE 21

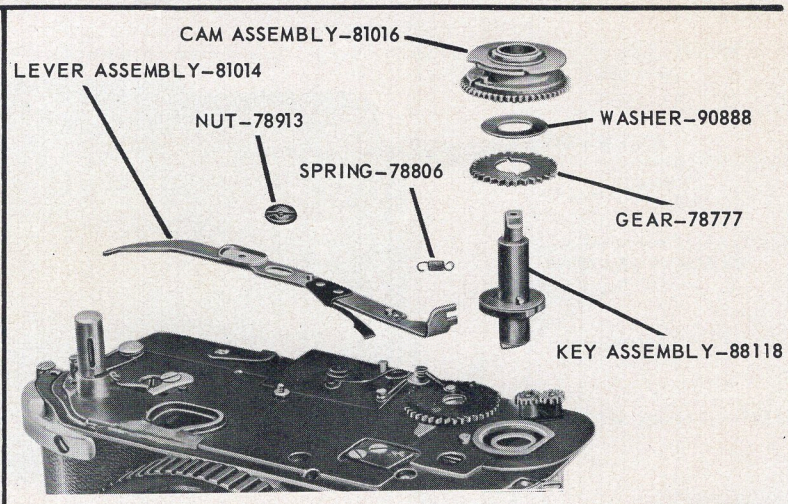

FIGURE 22

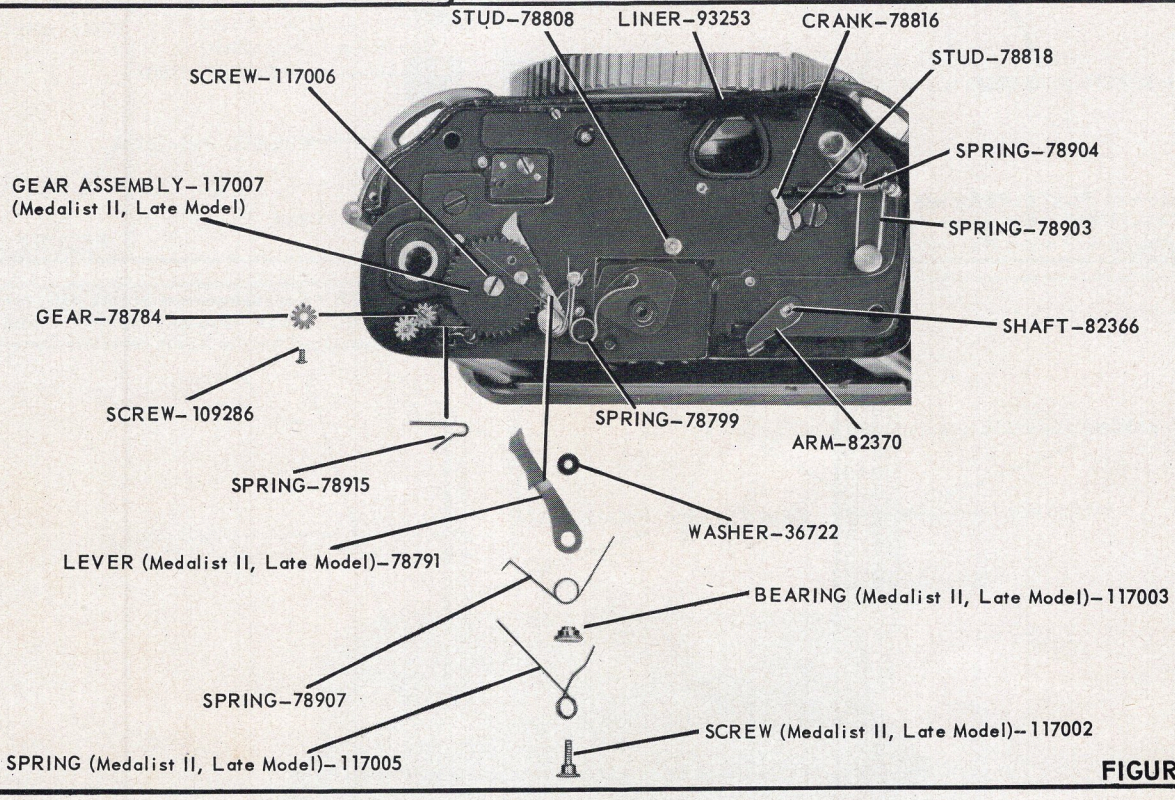

FIGURE 23

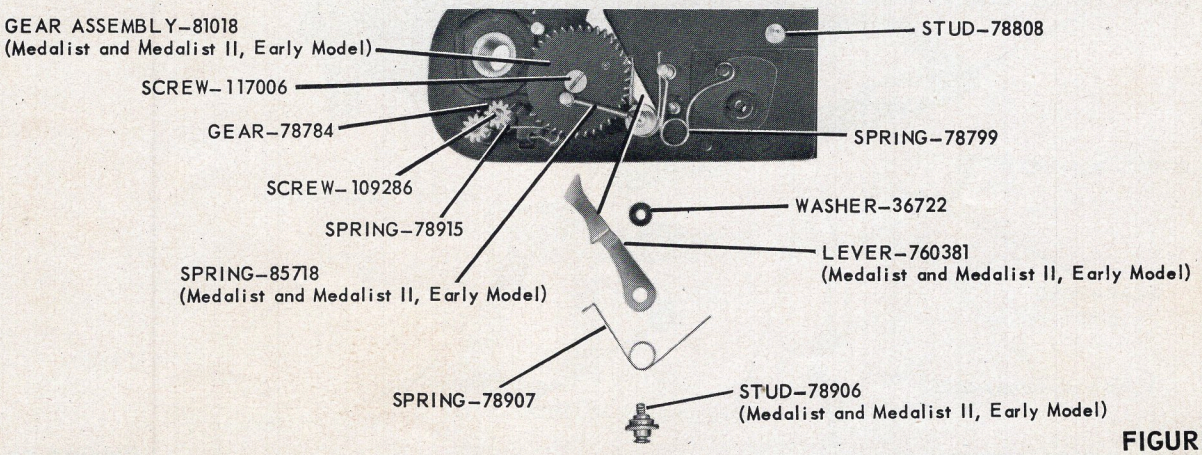

FIGURE 24

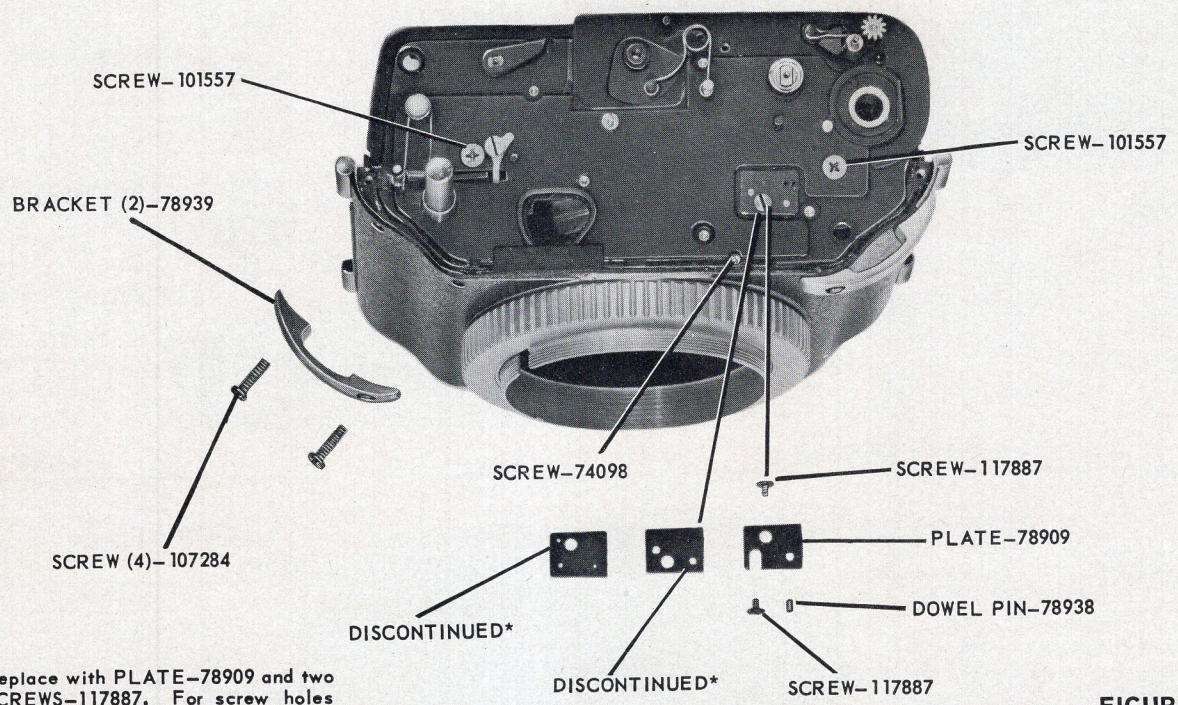

*Replace with PLATE–78909 and two SCREWS–117887. For screw holes use a No. 56 drill and a No. 0-80 tap.

FIGURE 25

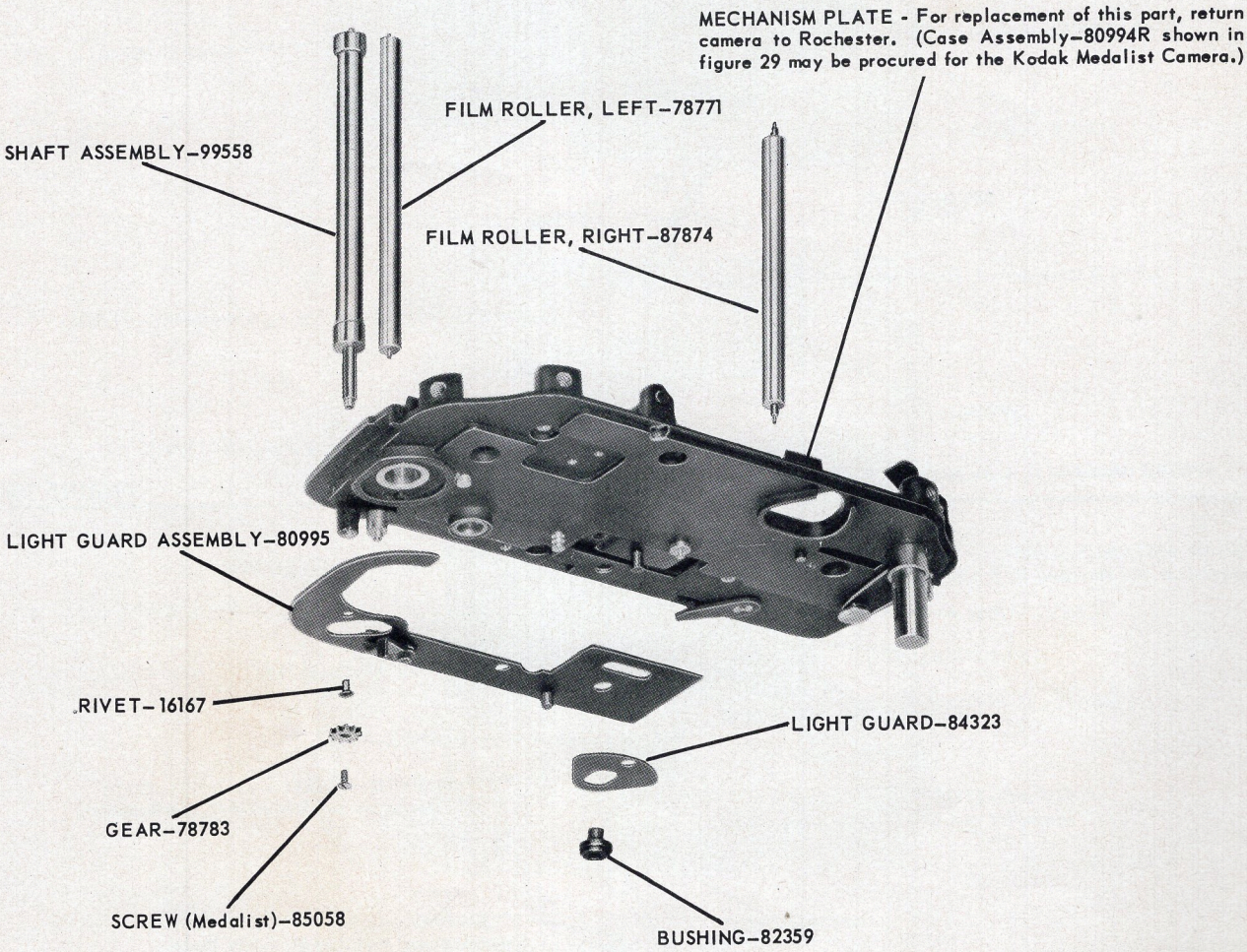

FIGURE 26

Always give PART NUMBER and NAME when ordering parts

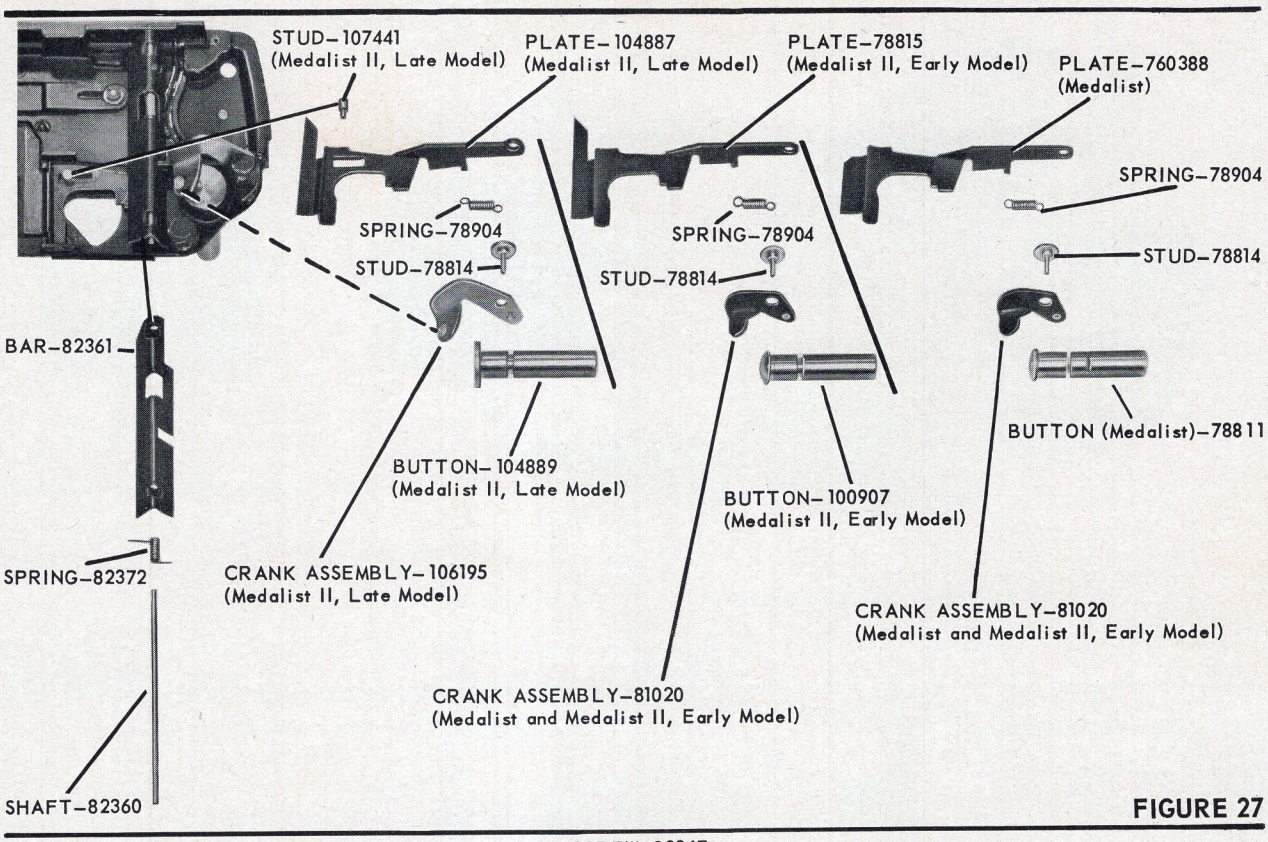

FIGURE 27

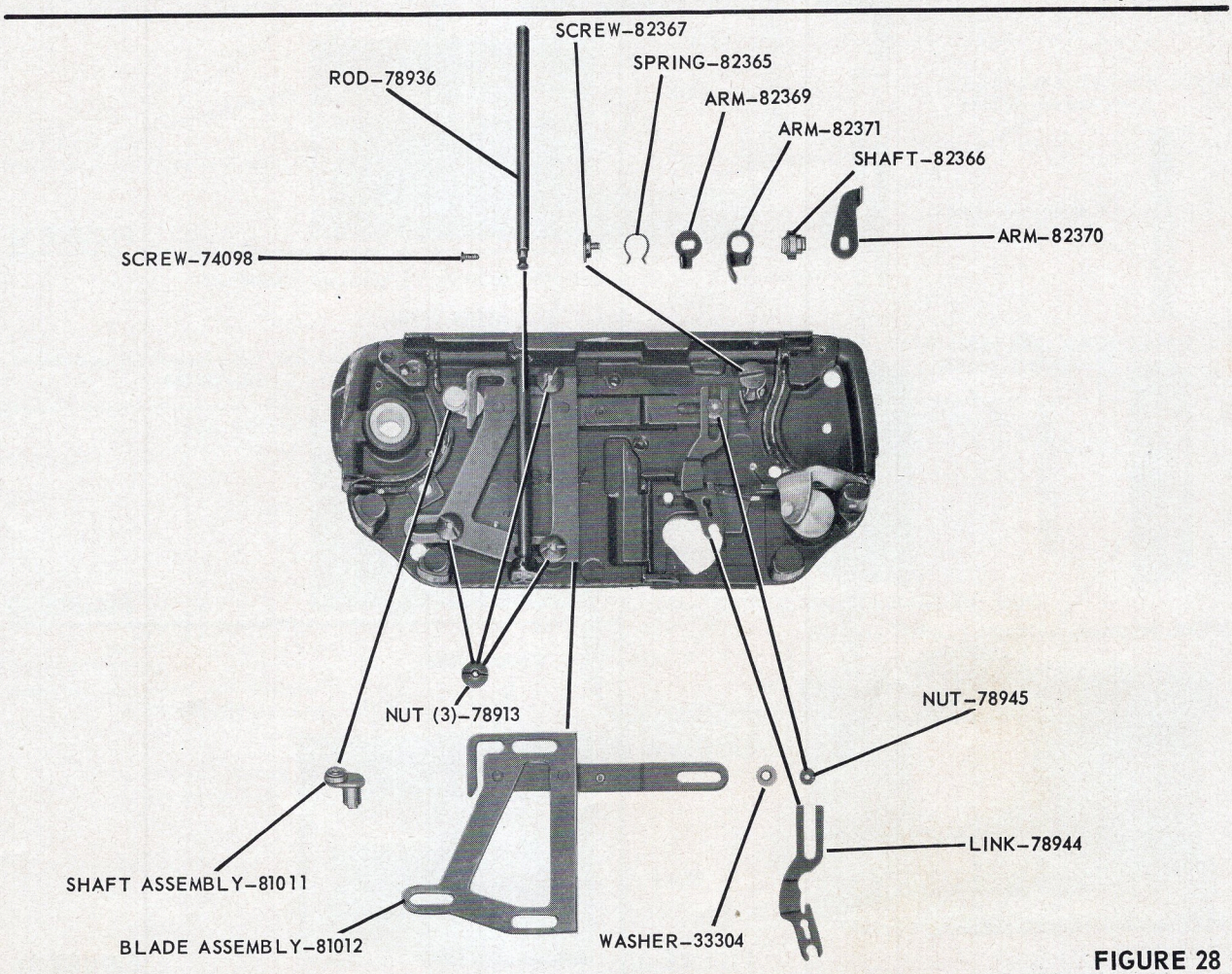

FIGURE 28

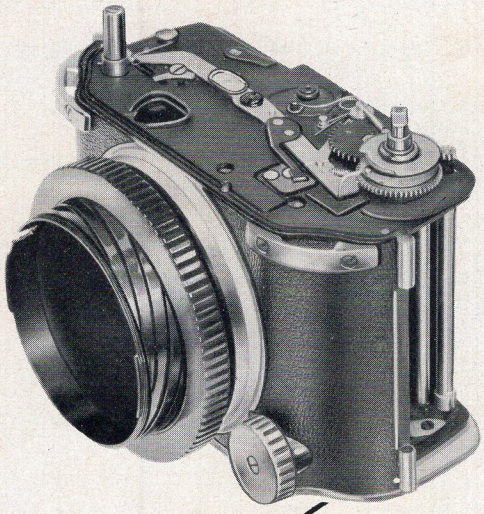

CASE WITH MECHANISM PLATE AND FOCUSING TUBE ASSEMBLY (Medalist)–80994R

FIGURE 29

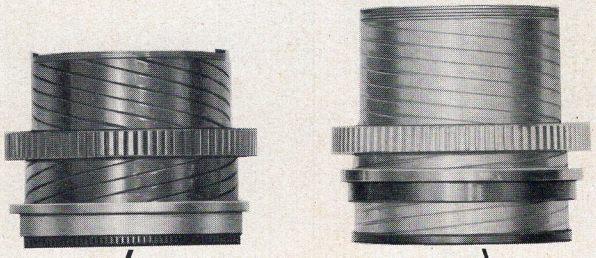

FOCUSING TUBE ASSEMBLY (Medalist II)–107466

FOCUSING TUBE ASSEMBLY (Medalist)–88364

FIGURE 30

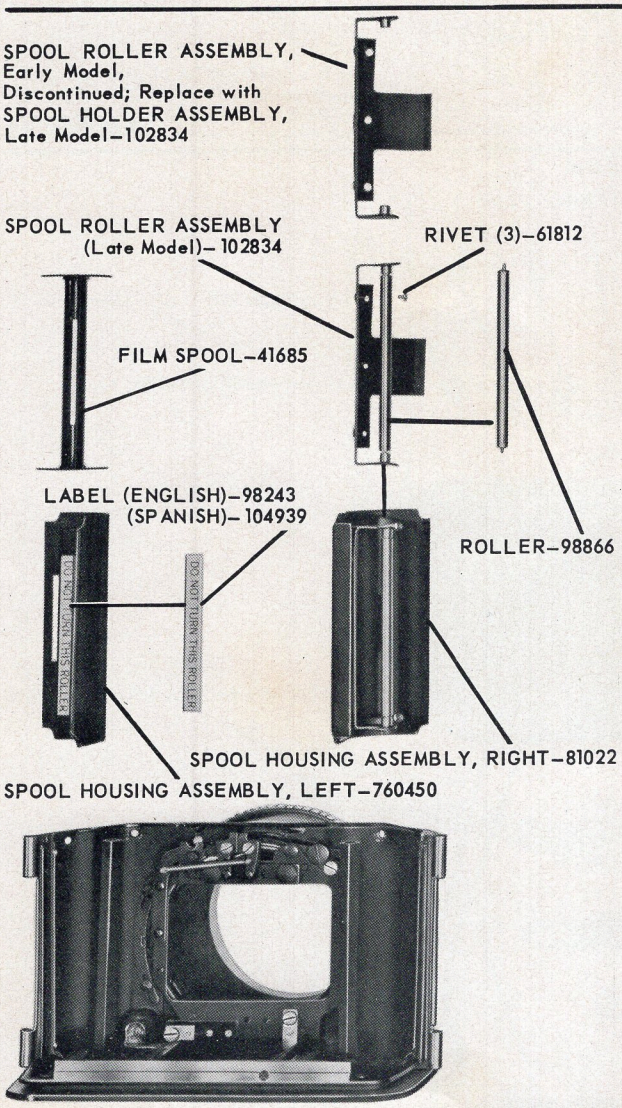

FIGURE 31

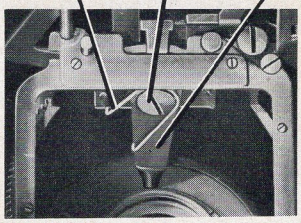

FIGURE 32

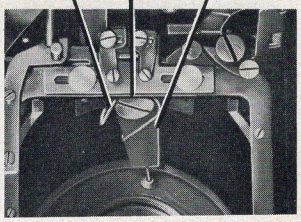

FIGURE 33

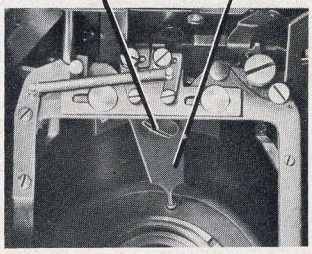

FIGURE 34

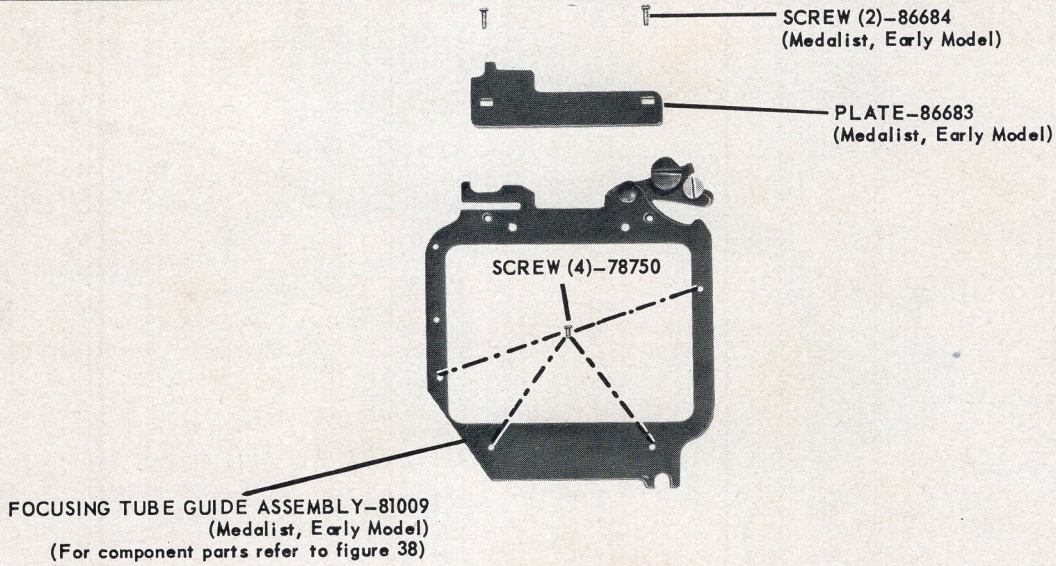

FIGURE 35

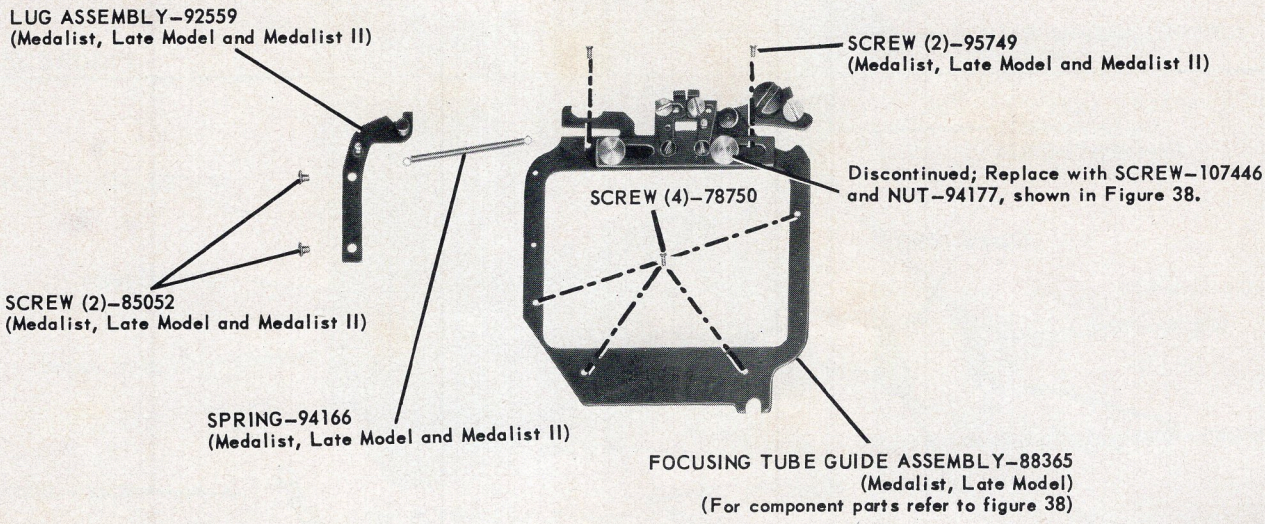

FIGURE 36

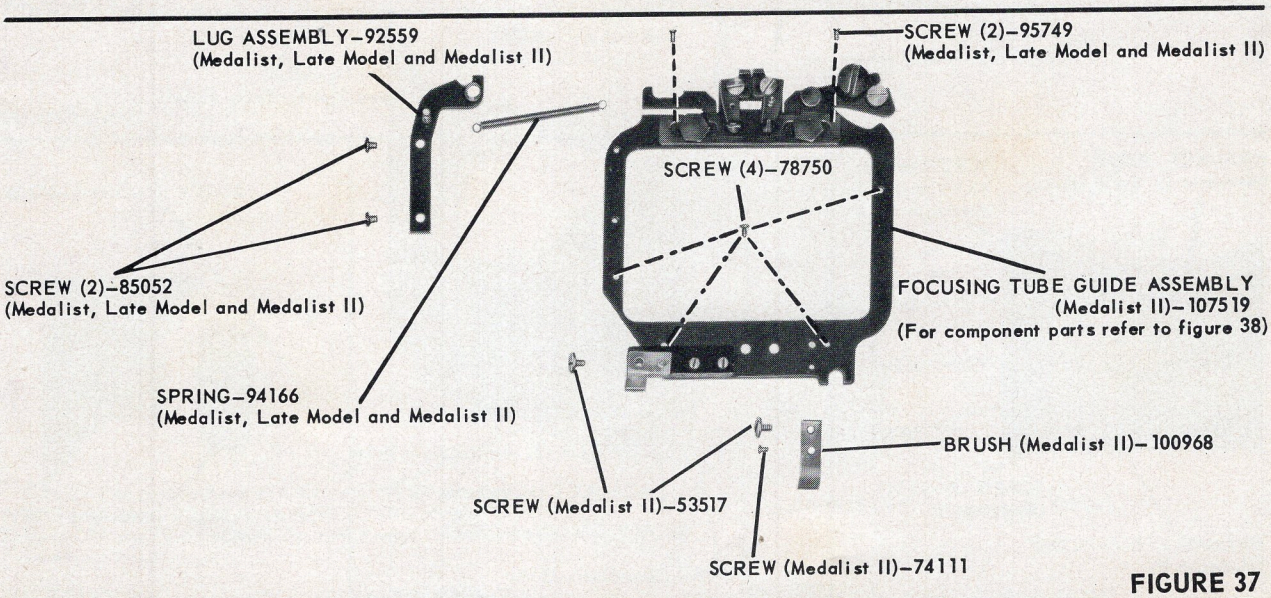

FIGURE 37

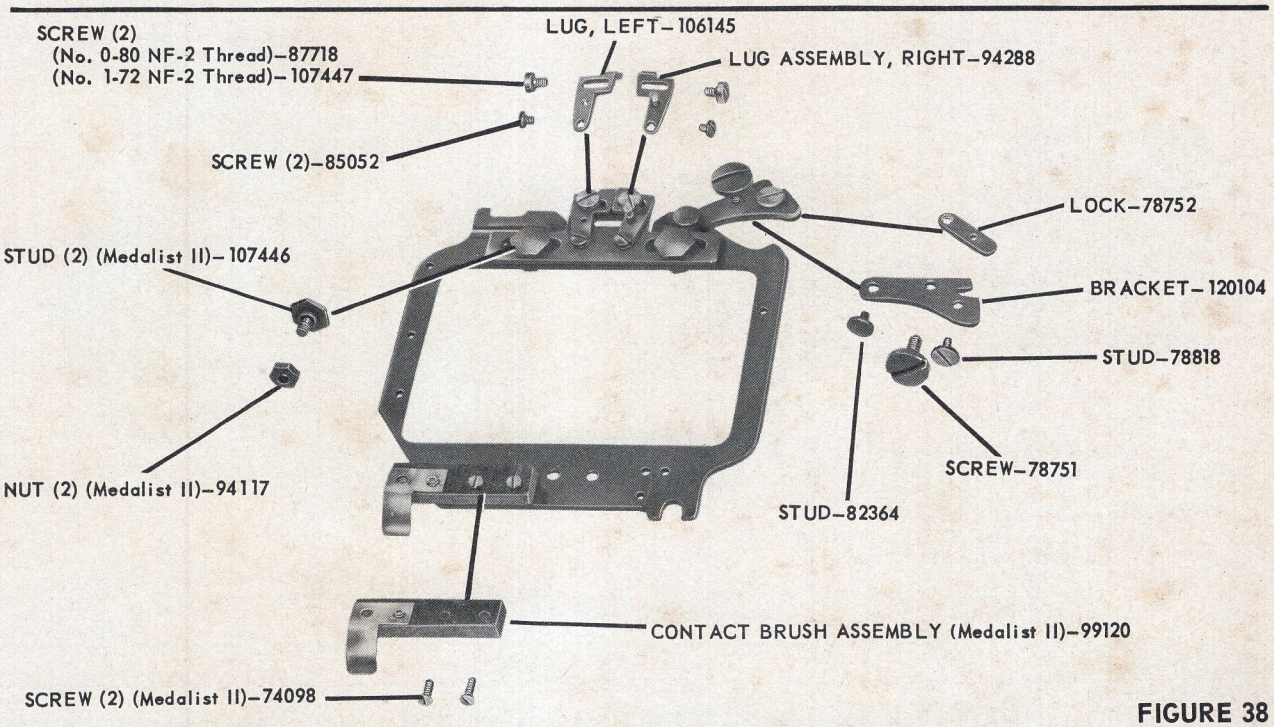

FIGURE 38

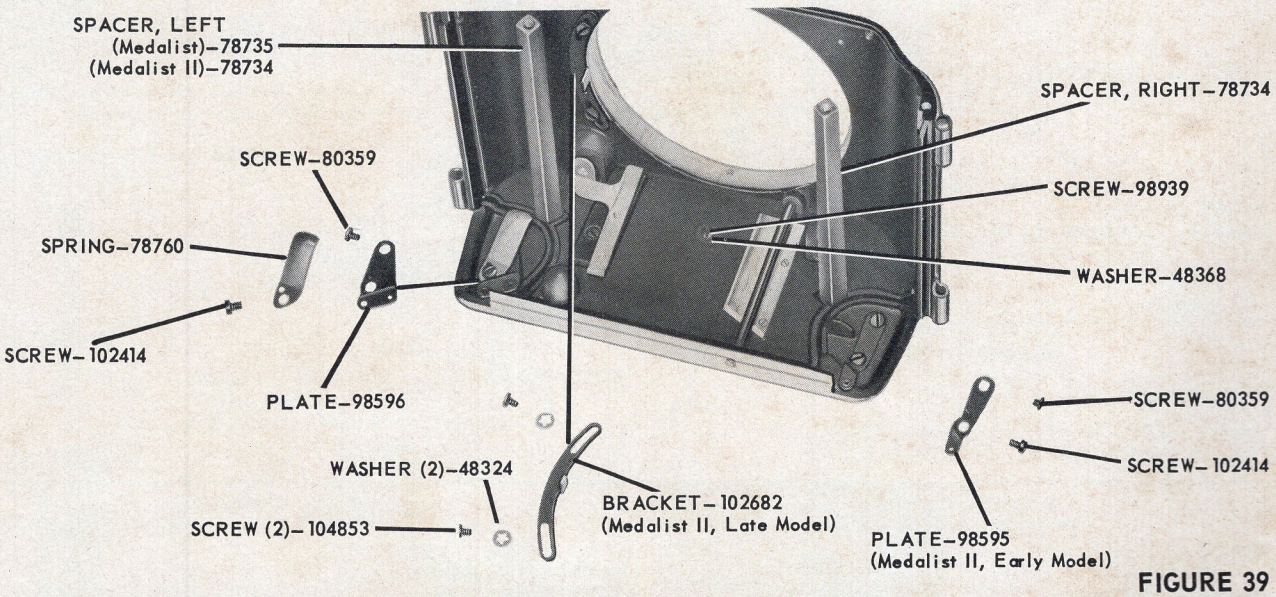

FIGURE 39

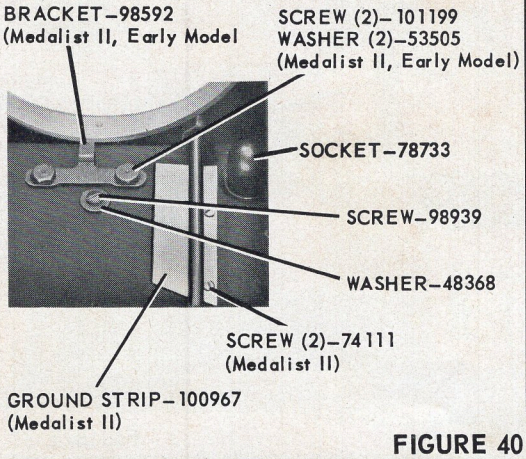

FIGURE 40

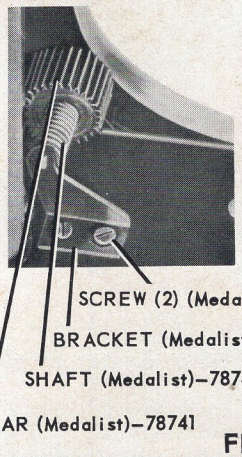

FIGURE 41

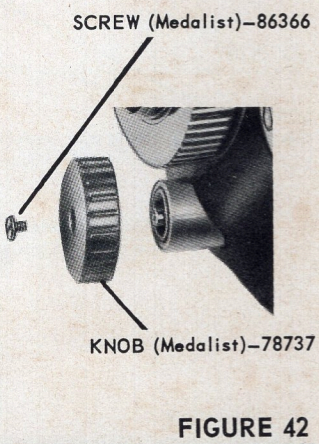

FIGURE 42

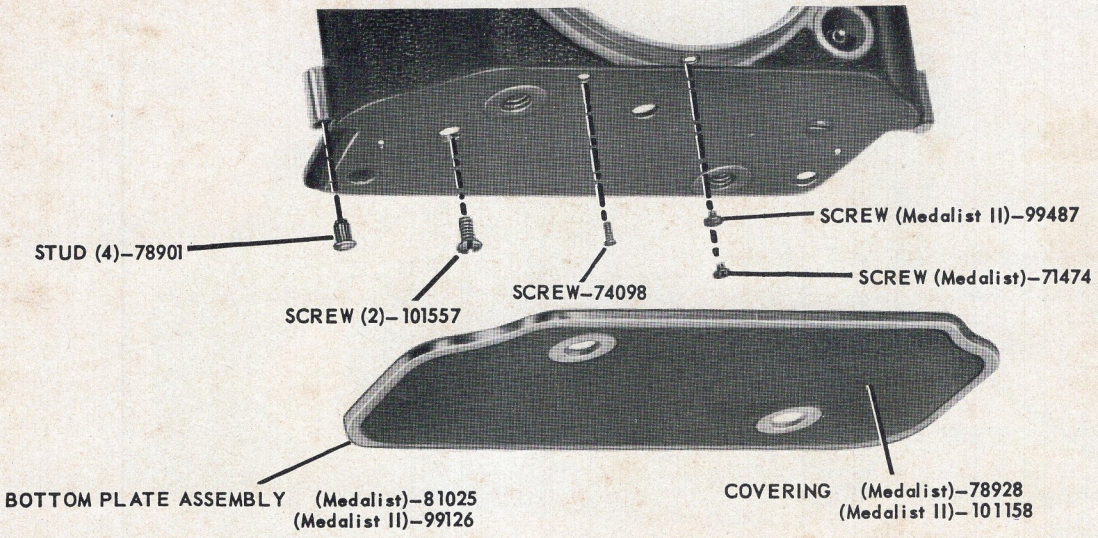

FIGURE 43

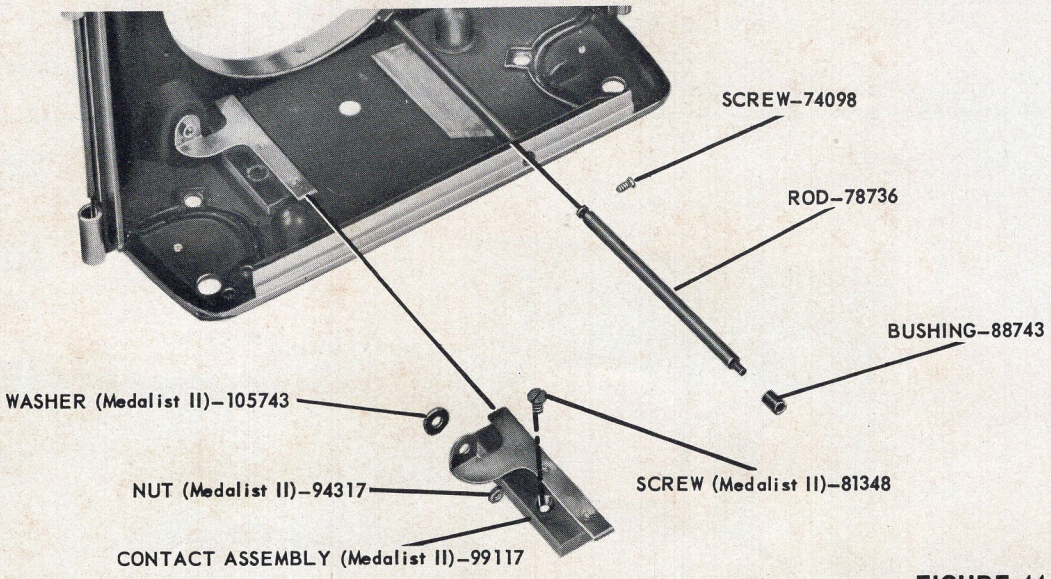

FIGURE 44

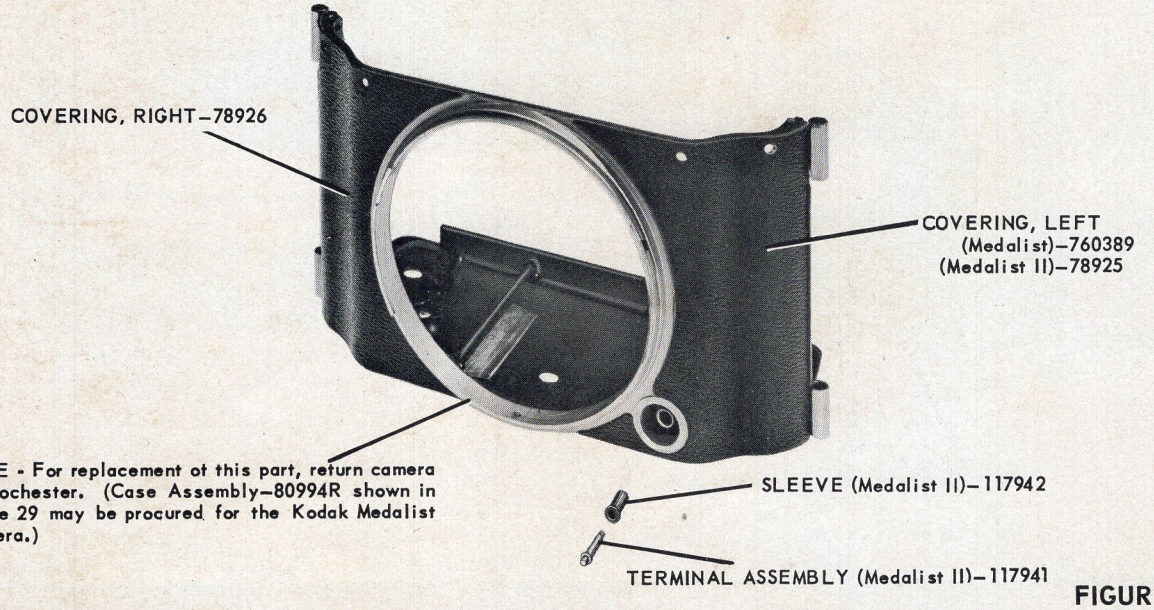

FIGURE 45

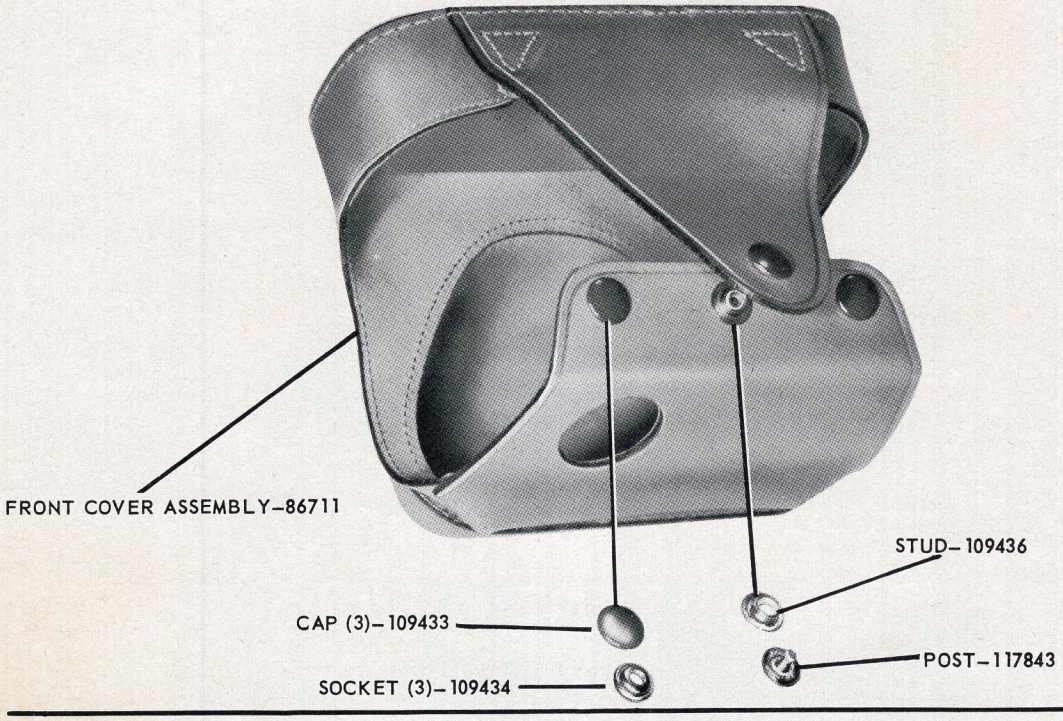

FIGURE 46

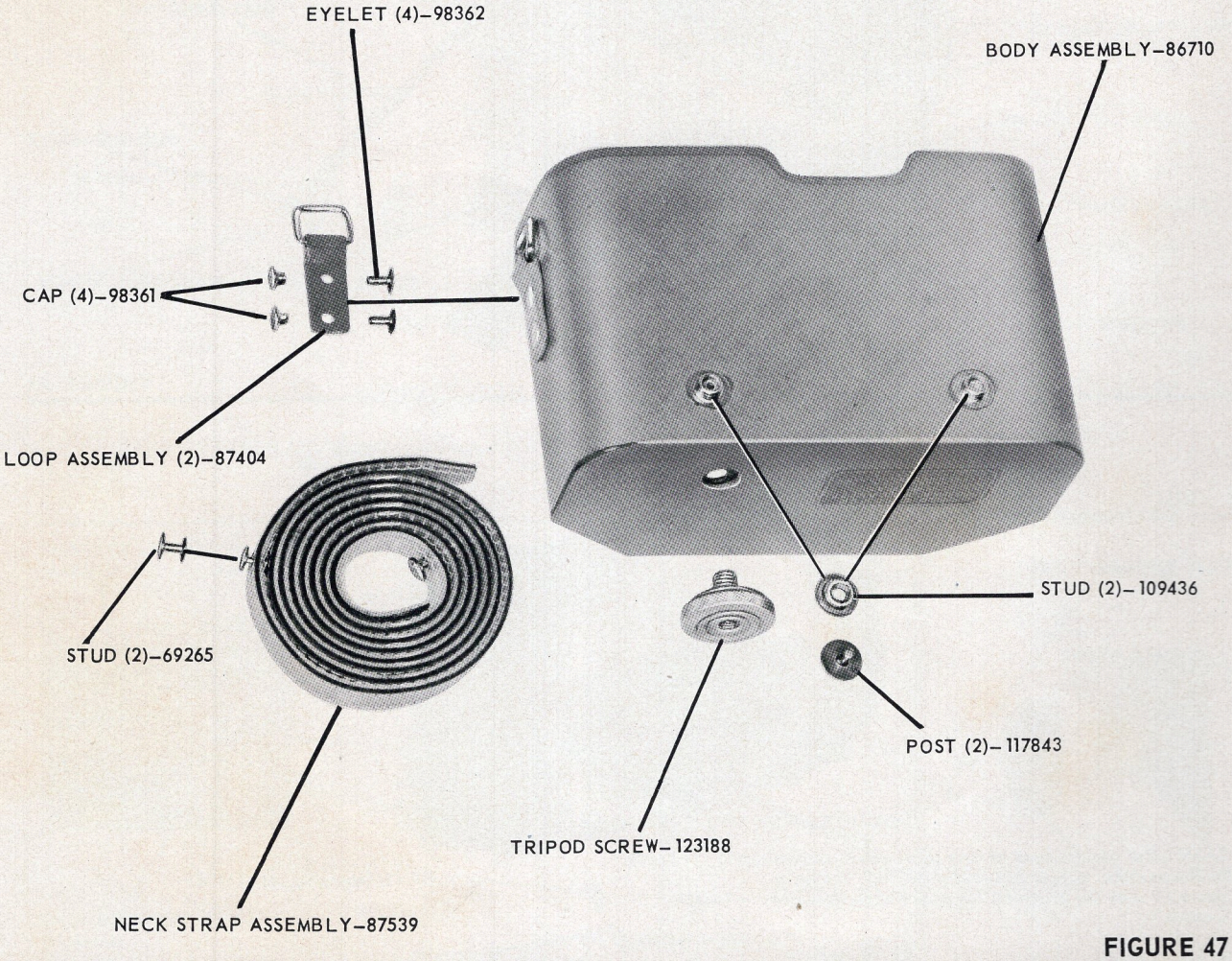

FIGURE 47

Always give PART NUMBER and NAME when ordering parts

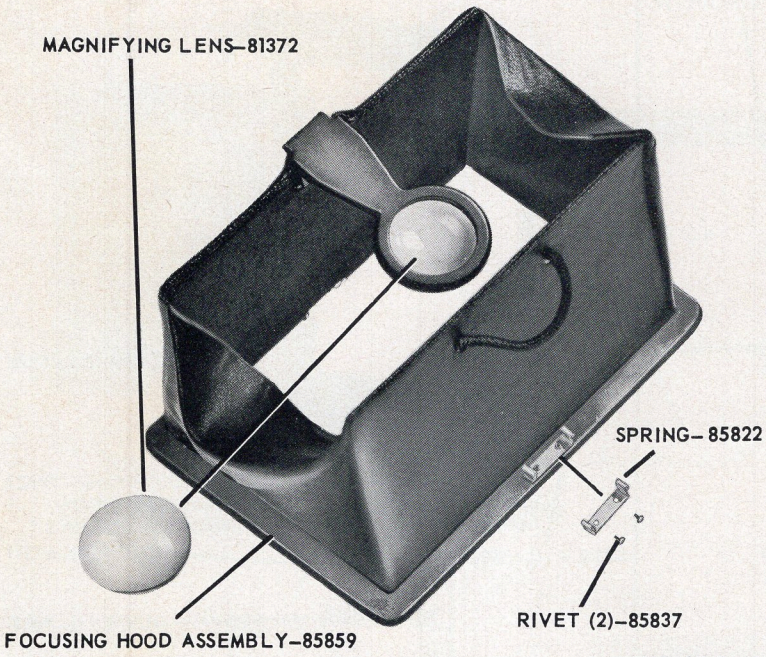

FIGURE 48

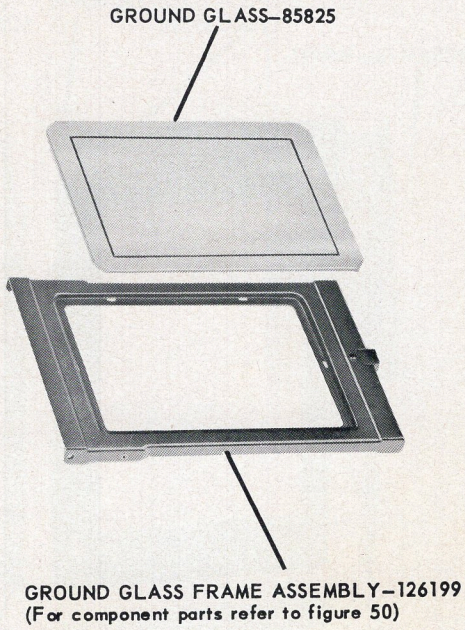

FIGURE 49

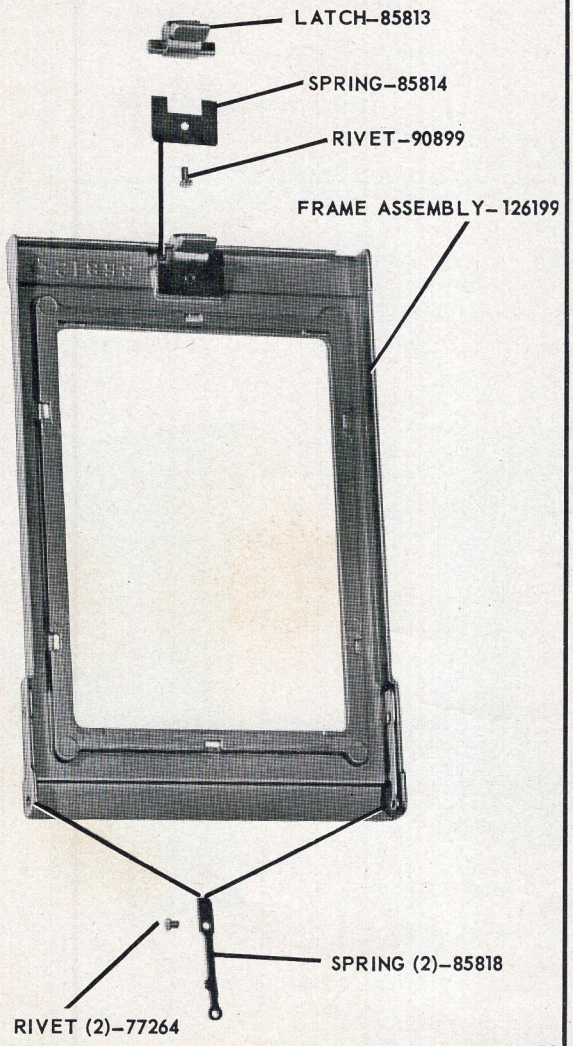

FIGURE 50

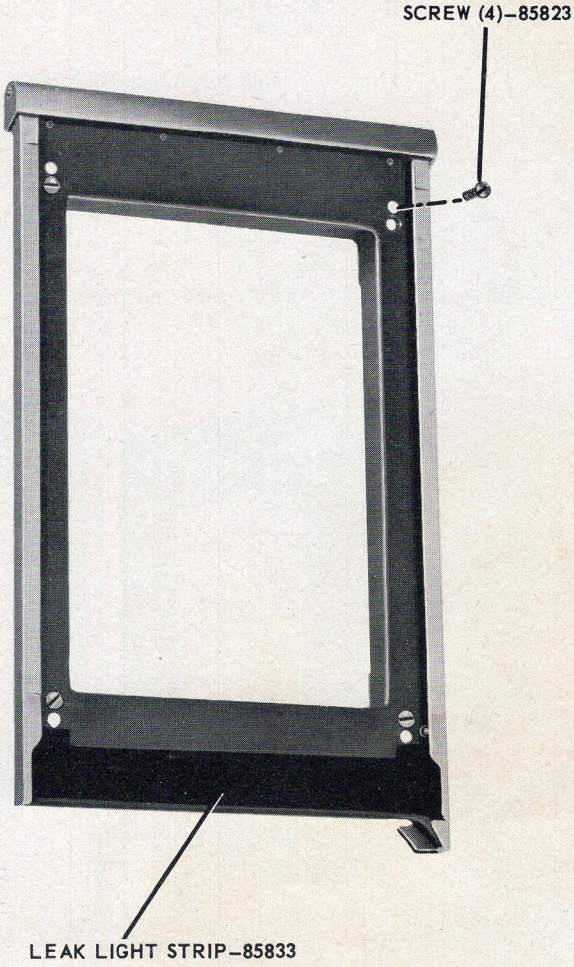

FIGURE 51

ACCESSORY BACK FOR KODAK MEDALIST AND KODAK MEDALIST II CAMERAS

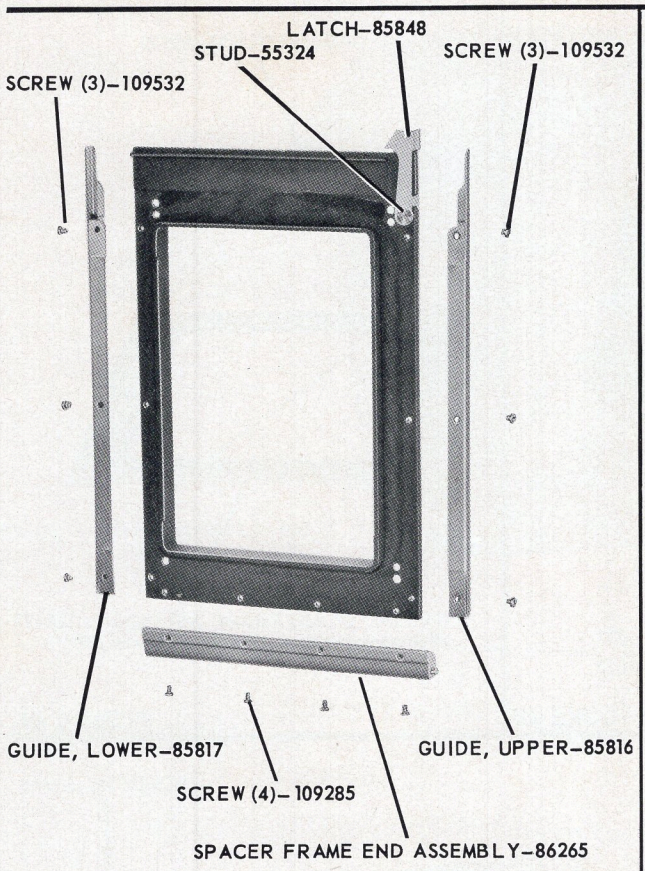

FIGURE 52

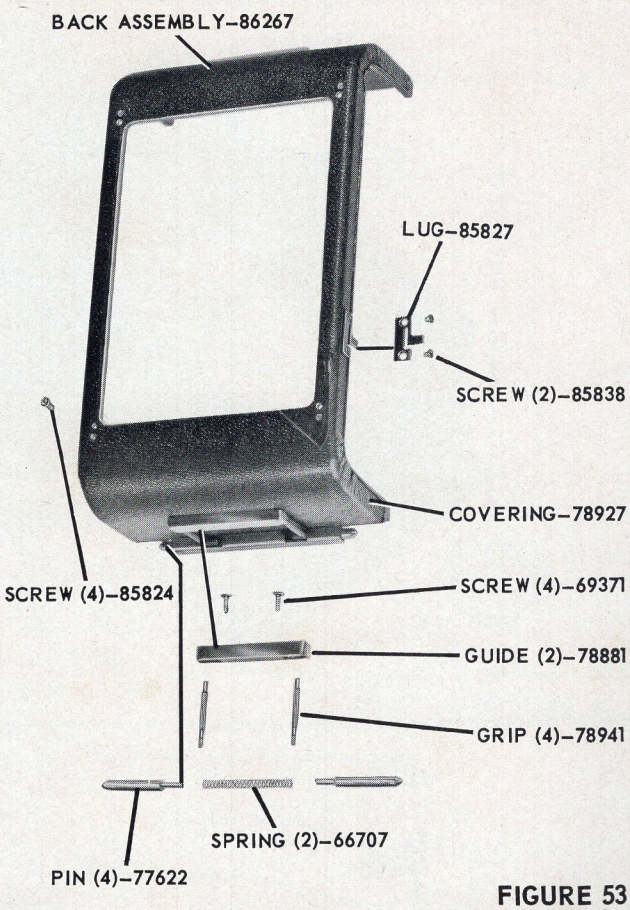

FIGURE 53

EXTENSION UNIT FOR ACCESSORY BACK FOR KODAK MEDALIST AND KODAK MEDALIST II CAMERAS

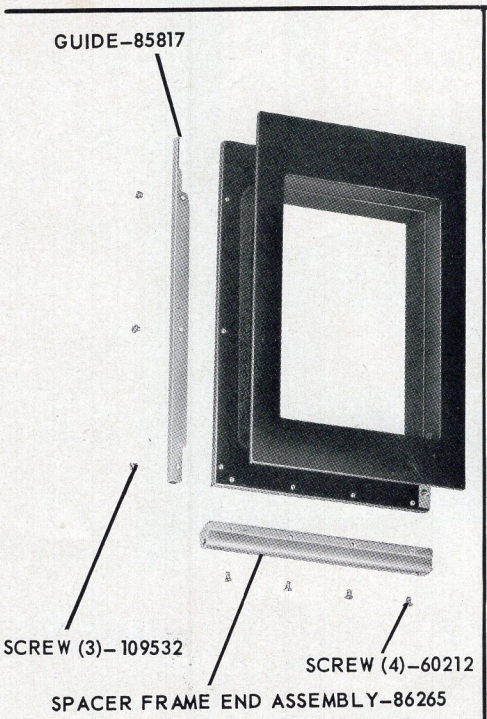

FIGURE 54

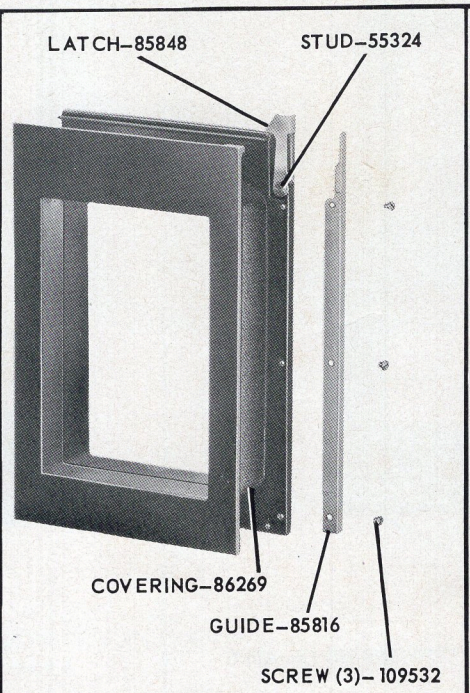

FIGURE 55

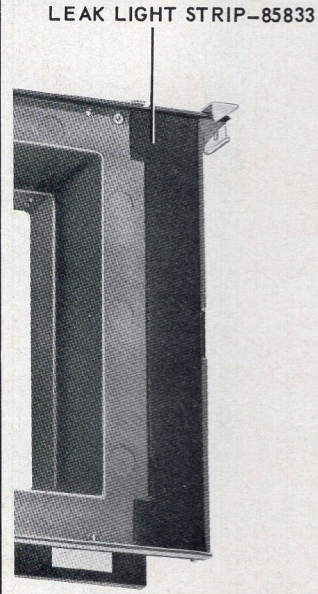

FIGURE 56

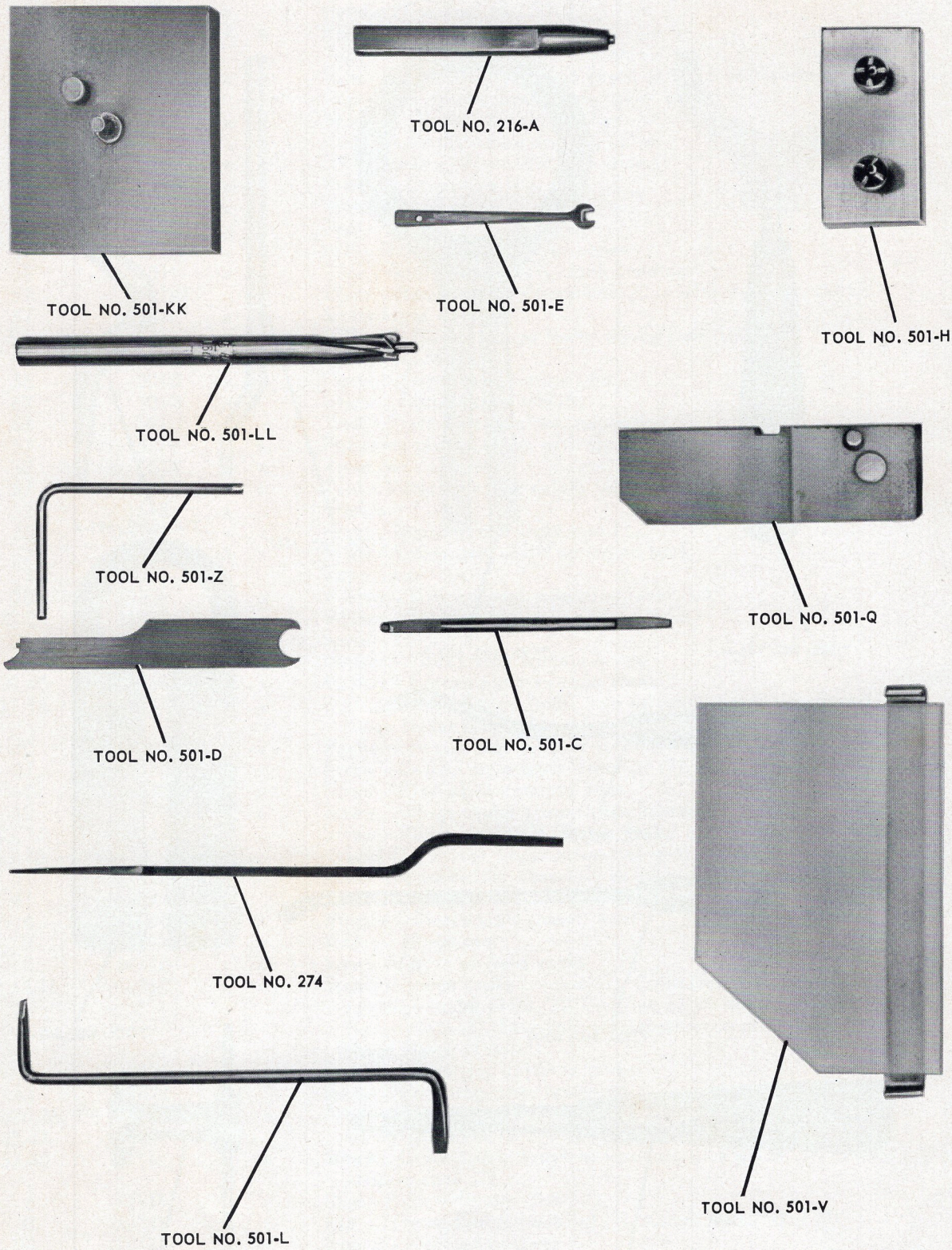
TOOL NO. 216-A
TOOL NO. 501-KK
TOOL NO. 501-E
TOOL NO. 501-H
TOOL NO. 501-LL
TOOL NO. 501-Z
TOOL NO. 501-Q
TOOL NO. 501-D
TOOL NO. 501-C
TOOL NO. 274
TOOL NO. 501-V
TOOL NO. 501-L

FIGURE 57

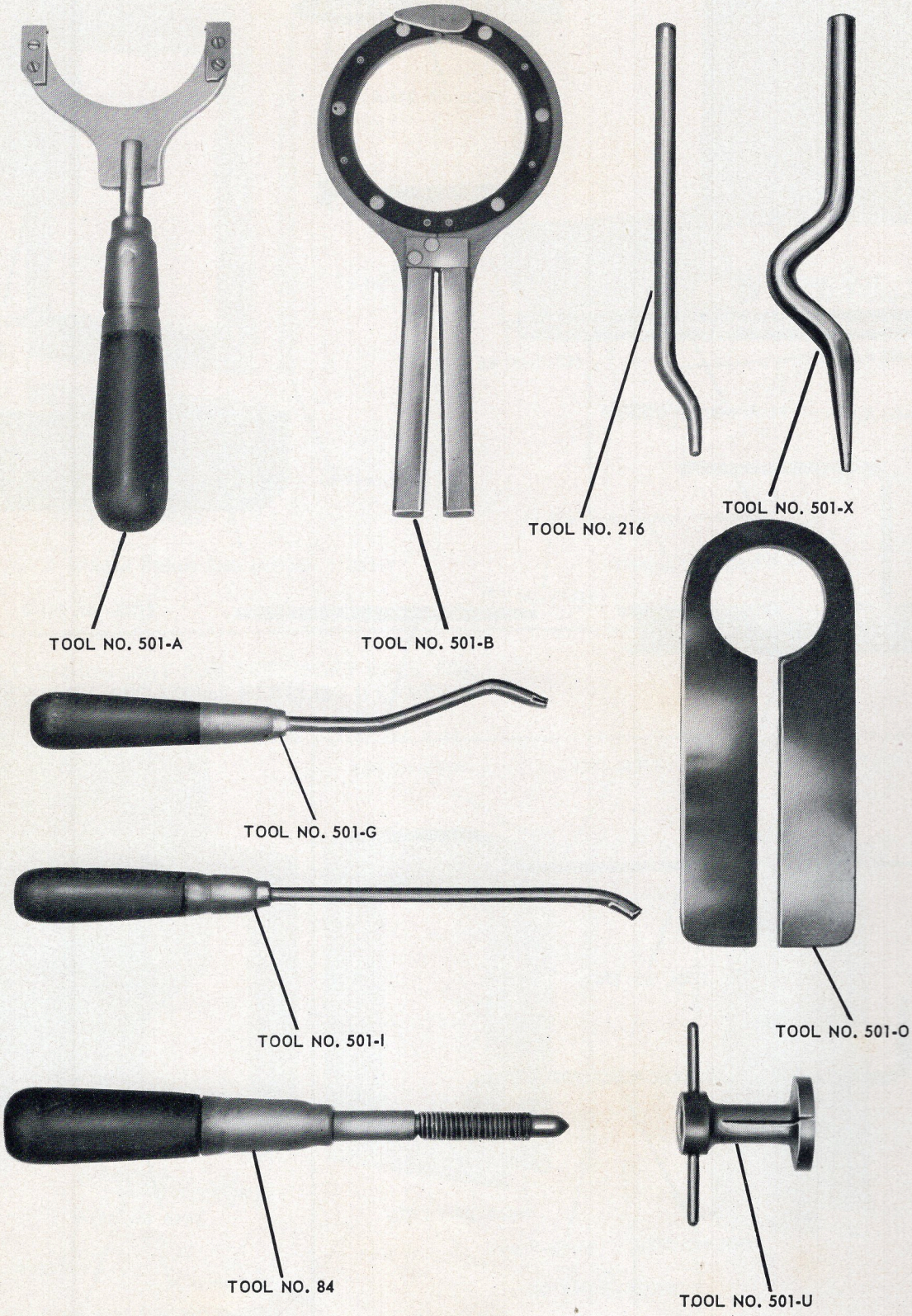

FIGURE 58

Always give PART NUMBER and NAME when ordering parts

Numerical List

FIG.	PART NO.	KODAK MEDALIST	KODAK MEDALIST II	PART NAME	REQD.
58	84	x		Handle (For Tool No. 501U)	1
58	216	x	x	Rivet Set - Offset	1
57	216A		x	Tool - Shutter body terminal staking	1
57	274	x	x	File - Offset (For filing the depth of focus scale frame shoulder on the direct view finder cover)	1
58	501A	x	x	Wrench - Shutter retaining collar	1
58	501B	x	x	Wrench - Focus tube retaining collar	1
57	501C	x	x	Screwdriver - Offset (For end prisms)	1
57	501D	x	x	Wrench - Objective lens	1
57	501E	x	x	Wrench - End prism	1
58	501G	x	x	Tool - Trigger plate bending	1
57	501H	x	x	Mill - Shutter setting lever screw	1
58	501I	x	x	Tool - Body release bell crank bending	1
57	501KK		x	Block - Range finder conversion (Use with Tool No. 501LL)	1
57	501L	x	x	Screwdriver - Offset	1
57	501LL		x	Mill with Pilot - Range finder conversion (Use with Tool No. 501KK)	1
58	501O	x	x	Clamp - Front combination lens	1
57	501Q	x		Block - Focus scale staking	1
58	501U	x		Tool - Front lens retainer, expanding	1
57	501V	x	x	Focusing ground glass with spring clamp	1
58	501X	x	x	Rivet Set - Offset	1
57	501Z	x	x	Tool - Metering roller safety latch bending	1
2	1618	x	x	Window - Film	1
26	16167	x	x	Rivet - Range finder light guard	1
2	16263	x	x	Rivet - Safety gear shaft spring to back	4
1	HE28035	x		Cap - Lens	1
28	33304	x	x	Washer - Range finder actuating lever link	1
23,24	36722	x	x	Washer - Shutter setting gear stop lever	1
31	41685	x	x	Spool - Film	1
39	48324		x	Washer - Focus stop bracket screw	2
39,40	48368	x	x	Washer - Bottom plate to case screw	1
17,18	53457	x	x	Ball Bearing - Range finder cam follower arm (1), Left end range finder prism (1)	2
40	53505		x	Washer - Focus stop bracket to case screw	2
37	53517		x	Screw - Ground strip brush terminal (1), contact brush terminal (1)	2
2	56570	x	x	Screw - Film slide cover to back	7
12	56790	x	x	Screw - Range finder plate to mechanism plate	1
13,14, 15,16	59044	x	x	Screw - Focus scale (1), Range finder cam follower arm to pivot stud (1), Range finder reflection guard to range finder plate (1)	3
31	61812	x	x	Rivet - Spool holder assembly to spool housing assembly	3
41	63894	x		Screw - Idler gear bracket to case	2
6	65064	x	x	Window - Direct view finder, front	2
2	66707	x	x	Spring - Hinge pin	2
3	66716	x	x	Screw - Depth of field scale	2
14,15,16	66860	x	x	Screw - Focus scale bracket (1), Coincidence prism assembly to range finder plate (3), Erecting prism assembly to range finder plate (1), Erecting and coincidence prism assembly to range finder plate (1)	6
2	69371	x	x	Screw - Hinge grip guide to back	4
43	71474	x		Screw - Focusing tube, retaining	1
25,28,38, 43,44	74098	x	x	Screw - Contact brush to focusing tube guide (Medalist II) (2), Upper guide rod retaining (1), Lower guide rod retaining (1)	AR
37,40	74111		x	Screw - Ground strip brush to focusing tube guide (1), Ground strip to case (2)	3
6	74114	x	x	Stud - Film indicator dial	1
40	78733	x	x	Nut - Tripod, Kodak Medalist (1), Kodak Medalist II (2)	AR
39	78734	x	x	Spacer - Mechanism plate	2
39	78735	x		Spacer - Mechanism plate, left	1
44	78736	x	x	Rod - Guide, lower	1
42	78737	x		Knob - Focusing	1

AR signifies As Required

Numerical List

FIG.	PART NO.	KODAK MEDALIST	KODAK MEDALIST II	PART NAME	REQD.
41	78741	x		Gear - Focusing idler	1
41	78742	x		Bracket - Focusing idler gear	1
41	78743	x		Shaft - Focusing idler gear	1
35,36,37	78750	x	x	Screw - Focus tube guide to focusing tube, lower	4
38	78751	x	x	Screw - Range finder adjusting	1
38	78752	x	x	Lock - Range finder adjusting screw	1
1	78753	x		Light Guard Assembly	1
32,33	78754	x		Spring - Shutter operating lever	1
32	78755	x		Lever - Shutter operating	1
32,33,34	78758	x	x	Stud - Shutter operating lever	1
39	78760	x	x	Tension - Spool	1
26	78771	x	x	Roller - Film, left	1
22	78777	x	x	Gear - Key post	1
26	78783	x	x	Gear - Safety control	1
23,24	78784	x	x	Gear - Safety control idler	1
7	78789		x	Knob - Film winding (Late Model)	1
23	78791		x	Lever - Shutter setting gear stop	1
13	78793	x		Screw - Anti-back lash gear retaining	1
23,24	78799	x	x	Spring - Shutter setting guide	1
22	78806	x	x	Spring - Safety lever return	1
23,24	78808	x	x	Stud - Safety lever to mechanism plate	1
27	78811	x		Button - Trigger	1
27	78814	x	x	Stud - Trigger bell crank to mechanism plate	1
27	78815		x	Plate - Trigger (Early Model)	1
23	78816	x	x	Crank - Trigger plate bell	1
23,38	78818	x	x	Stud - Trigger plate bell crank (1), Range finder adjusting screw lock (1)	2
11	78826	x	x	Screw - Counter dial	1
11	78827	x	x	Spring - Counter dial	1
8	78829	x	x	Window - Counter dial	1
16	78830	x	x	Pawl - Safety control stop	1
16	78831	x	x	Stud - Safety control stop pawl	1
16	78832	x	x	Spring - Safety control stop pawl	1
10	78833	x	x	Window - Exposure signal	1
10	78834	x	x	Bezel - Exposure signal window	1
10	78835	x		Lever - Time	1
10	78836	x		Spring - Time lever	1
10	78837	x		Screw - Time lever to trigger button	1
14,18	78843	x	x	Prism - Range finder end, right (1), Range finder end, left (1)	2
20	78846	x	x	Stud - End prism bearing	1
14,15	78849	x	x	Spring - Range finder cam follower	1
19	78864	x	x	Mask - Erecting prism	1
6	78866	x	x	Direct View Finder Rear Window Assembly	1
6	78867	x	x	Mask - Direct view finder, rear window	1
6	78868	x	x	Frame - Direct view finder, rear window	1
6	78869	x	x	Lens - Direct view finder negative	1
6	78870	x	x	Frame - Direct view finder negative lens	1
6	78871	x	x	Frame - Direct view finder, front window	2
3	78872	x	x	Frame - Depth of field scale	1
5	78874	x		Scale - Focus (feet)	1
5	78875	x		Pinion - Focus scale	1
2	78878	x	x	Pin - Hinge	4
2	78881	x	x	Guide - Hinge grip	2
2	78882	x	x	Latch - Hinge pin	2
2	78883	x	x	Screw - Hinge pin latch	2
2	78884	x	x	Roller - Film	1
2	78886	x	x	Pin - Film roller	1
2	78887	x	x	Spring - Film roller	1
2	78888	x	x	Slide - Film window	1
2	78891	x	x	Button - Film window slide	1
2	78892	x	x	Spring - Window slide	1

Numerical List

FIG.	PART NO.	KODAK MEDALIST	KODAK MEDALIST II	PART NAME	REQD.
2	78895	x	x	Spring - Safety gear shaft	2
20	78900	x	x	Stud - Counter knob	1
43	78901	x	x	Stud - Hinge	4
11	78902	x	x	Washer - Counter dial	1
23	78903	x	x	Spring - Trigger lock	1
23,27	78904	x	x	Spring - Trigger plate	1
24	78906		x	Stud - Shutter setting gear stop lever	1
23,24	78907	x	x	Spring - Shutter setting gear stop lever	1
25	78909	x	x	Plate - Safety lever spring stop	1
22,28	78913	x	x	Nut - Safety lever retaining (1), Shutter setting blade stud (3)	4
23,24	78915	x	x	Spring - Safety latch	1
8	78923	x	x	Plate - Counter dial window	1
45	78925		x	Covering - Case, left	1
45	78926	x	x	Covering - Case, right	1
2	78927	x	x	Covering - Back	1
43	78928	x		Covering - Bottom plate	1
20	78929	x	x	Covering - Range finder plate, right	1
20	78930	x	x	Covering - Range finder plate, left	1
10	78931	x	x	Covering - Time lever housing (Medalist), Trigger button housing (Medalist II)	1
8	78932	x	x	Covering - Counter dial housing	1
7	78933	x	x	Washer - Key post, spring	1
28	78936	x	x	Rod - Guide, upper	1
25	78938	x	x	Dowel - Safety lever spring stop plate to mechanism plate	1
25	78939	x	x	Bracket - Neck strap	2
2	78941	x	x	Grip - Hinge	4
17,18	78943	x	x	Screw - Range finder cam follower arm to prism mount adjusting (1), Left end prism bracket adjusting (1)	2
28	78944	x	x	Link - Range finder actuating lever	1
28	78945	x	x	Nut - Range finder actuating lever link	1
1	78974	x		Ring - Shutter retaining	1
1	78975	x		Disk - Shutter operating	1
1	78976	x	x	Spacer - Shutter operating disk bearing	1
1	78977	x	x	Collar - Shutter retaining	1
39	89359	x	x	Screw - Case roller bearing, left to case (1), case roller bearing, right to case (1)	2
1	80817	x	x	Stud - Neck strap	2
1	80991	x	x	Back Assembly	1
29	80994R	x		Case with Mechanism Plate and Focusing Tube Assembly	1
26	80995	x	x	Range Finder Light Guard Assembly	1
7	80996	x	x	Counter Dial Housing Assembly	1
10	80997		x	Trigger Button Housing Assembly	1
20	80998	x		Range Finder Plate Assembly (Late Model)	1
15	80999	x	x	Range Finder Cam Follower Arm Assembly	1
12	81000	x	x	Objective Lens Mount Assembly	2
11	81001	x	x	Parallax Frame Assembly	1
11	81002	x	x	Range Finder Eyelet Lens Assembly	1
16	81003	x	x	Left End Prism Assembly	1
16	81005	x	x	Erecting and Coincidence Prism Assembly	1
15	81006	x	x	Range Finder Cam Assembly	1
11	81008	x	x	Counter Dial Assembly	1
35	81009	x		Focusing Tube Guide Assembly	1
28	81011	x	x	Shutter Setting Gear Shaft Assembly	1
28	81012	x	x	Shutter Setting Gear Blade Assembly	1
22	81014	x	x	Safety Lever Assembly	1
22	81016	x	x	Safety Control Cam Assembly	1
24	81018	x	x	Shutter Setting Gear Assembly	1
4	81019	x		Direct View Finder Cover Assembly	1
27	81020	x	x	Trigger Bell Crank Assembly	1
31	81022	x	x	Spool Housing Assembly, right	1
43	81025	x		Bottom Plate Assembly	1

Numerical List

FIG.	PART NO.	KODAK MEDALIST	KODAK MEDALIST II	PART NAME	REQD.
44	81348		x	Screw - Contact to case	1
7	81789	x	x	Plate - Origin	1
26	82359	x	x	Bushing - Interlock release bar	1
27	82360	x	x	Shaft - Range finder coupler bar	1
27	82361	x	x	Bar - Range finder coupler	1
38	82364	x	x	Stud - Range finder adjusting screw bracket	1
28	82365	x	x	Spring - Range finder coupler actuating arm	1
23,28	82366	x	x	Shaft - Range finder coupler	1
28	82367	x	x	Screw - Range finder coupler actuating arm	1
23	82370	x	x	Arm - Range finder coupler	1
28	82370	x	x	Arm - Range finder coupler, upper	1
28	82371	x	x	Arm - Range finder coupler, lower	1
27	82372	x	x	Spring - Range finder coupler bar	1
10	83945	x		Washer - Time lever	1
5	83946	x		Spring - Focus scale	1
16	83952	x	x	Guard - Range finder reflection	1
9	83953	x	x	Tube - Exposure indicator	1
26	84323	x	x	Guard - Shutter setting lever, light	1
2,36,37, 38	85052	x	x	Screw - Film tension pad to back (2), Focusing tube guide lug to focusing tube guide (2), Shutter operating lever lug to slide (2)	6
12	85053	x	x	Nut - Objective lens mount	1
26	85058	x		Screw - Safety control gear to shaft	1
12	85676	x	x	Shutter Setting Lever Assembly	1
24	85718	x	x	Spring - Shutter setting gear	1
7,42	86366	x	x	Screw - Focusing knob (Medalist) (1), Film winding knob (Medalist and Medalist II Early Model) (1)	AR
2	86586	x	x	Film Tension Pad Assembly	1
35	86683	x		Plate - Focus tube	1
35	86684	x		Screw - Focus tube plate (Old Style)	2
6	86708	x	x	Guard - Direct view finder negative lens, reflection	1
9	86965	x	x	Washer - Trigger bushing leak light	1
1	87537	x	x	Neck Strap Assembly	1
21,38	87718	x	x	Screw - Range finder actuating lever to range finder cam assembly (1), Shutter operating lever lug to focusing tube guide, No. 0-80 NF-2 Thread (2)	AR
26	87874	x	x	Roller - Film, right	1
44	88743		x	Bushing - Guide rod eccentric	1
22	88118	x	x	Key Assembly	1
30	88364	x		Focusing Tube Assembly	1
36	88365	x		Focusing Tube Guide Assembly	1
22	90888	x	x	Washer - Key post	1
36,37	92559	x	x	Focusing Tube Guide Lug Assembly	1
7	92950	x	x	Washer - Key post	1
23	93253	x	x	Liner - Range finder actuating lever	1
16	94048	x		Coincidence Prism Assembly	1
12	94058	x	x	Screw - Range finder plate to mechanism plate	2
38	94117		x	Nut - Shutter operating lever slide stud	2
36,37	94166	x	x	Spring - Focusing tube guide lug	1
8	94266	x	x	Rivet - Counter dial window plate to counter dial housing	2
6	94267	x	x	Shim - Direct view finder, front window	2
38	94288	x	x	Shutter Operating Lever Lug Assembly, right	1
44	94317		x	Nut - Terminal	1
7,9	94678	x	x	Screw - Counter dial housing to range finder plate (3), Time lever housing to range finder plate (Kodak Medalist) (3), Trigger button housing to range finder plate (Kodak Medalist II) (3)	AR
16	94752		x	Erecting Prism Assembly	1
3	95425	x	x	Screw - Direct view finder cover	4
36,37	95749	x	x	Screw - Focus tube guide to focusing tube, upper	2
6	96097	x	x	Mask - Direct view finder, alignment	1
1	96229		x	Disk - Shutter operating	1

AR signifies As Required

Numerical List

FIG.	PART NO.	KODAK MEDALIST	KODAK MEDALIST II	PART NAME	REQD.
7	97268	x	x	Screw - Origin plate to counter dial housing	2
31	98243	x	x	Label - Caution (English)	1
40	98592		x	Bracket - Focus stop (Old Model)	1
1	98594		x	Wire - Connector	1
39	98595		x	Plate - Case roller bearing, right	1
39	98596		x	Plate - Case roller bearing, left	1
15	98597		x	Spring - Focus scale	1
7	98598		x	Screw - Film winding knob (Medalist II Late Model)	1
15	98601		x	Screw - Focus scale bracket, shouldered	1
3	98853	x	x	Scale - Depth of field	1
31	98866	x	x	Roller - Film	1
39,40	98939	x	x	Screw - Bottom plate to case	1
44	99117		x	Contact Assembly	1
38	99120		x	Contact Brush Assembly	1
21	99125	x	x	Range Finder Actuating Lever Assembly	1
43	99126		x	Bottom Plate Assembly	1
4	99134		x	Direct View Finder Cover Assembly	1
43	99487		x	Screw - Focusing tube, retaining	1
26	99558	x	x	Safety Control Drive Shaft Assembly	1
27	100907		x	Button - Trigger (Early Model)	1
40	100967		x	Strip - Ground	1
37	100968		x	Brush - Ground strip	1
1	101076		x	Wire - Connector	1
1	101087		x	Light Guard Assembly	1
43	101158		x	Covering - Bottom plate	1
40	101199		x	Screw - Focus stop bracket	2
39	102414	x	x	Screw - Spool tension to bottom plate (1), Spool roller bearing plate, right to bottom plate (1)	2
25,43	101557	x	x	Screw - Mechanism plate to spacer (2), Case to spacer (2)	4
2	102222	x	x	Film Window Slide Cover Assembly	1
9	102361	x	x	Washer - Trigger button leak light	1
12	102681	x		Pin - Range finder plate to mechanism plate, dowel	2
39	102682		x	Bracket - Focus stop,(New Model)	1
31	102834	x	x	Spool Roller Assembly	1
13	103629		x	Gear - Anti-back lash	1
13	103630		x	Spring - Anti-back lash gear	1
14	103632		x	Post - Range finder cam follower spring	1
13	103636		x	Pinion - Focus scale	1
13	103637		x	Scale - Focus (feet)	1
13	103638		x	Scale - Focus (meters)	1
1	104287		x	Bushing - Connector wire	1
39	104853		x	Screw - Focus stop bracket to case	2
27	104887		x	Plate - Trigger (Late Model)	1
27	104889		x	Button - Trigger (Late Model)	1
31	104939	x	x	Label - Caution (Spanish)	1
14	105611		x	Range Finder Cam Follower Arm Assembly	1
13	105612		x	Range Finder Cam Assembly	1
14	105615		x	Focus Scale Bracket Assembly	1
20	105616		x	Range Finder Plate Assembly	1
13	105619		x	Spring - Range finder cam return	1
5	105696	x	x	Film Indicator Dial Assembly	1
44	105743		x	Washer - Terminal insulating	1
14	106030		x	Screw - Range finder cam follower adjusting	1
11	106030	x	x	Screw - Parallax frame adjusting	1
38	106145	x	x	Lug - Shutter operating lever, left	1
27	106195		x	Trigger Bell Crank Assembly (Late Model)	1
11	106286	x	x	Screw - Parallax frame to range finder plate	2
25	107284	x	x	Screw - Neck strap bracket to case and mechanism plate	4
27	107441		x	Stud - Trigger plate, guide	1
38	107446		x	Stud - Shutter operating lever slide	2
38	107447		x	Screw - Shutter operating lever lug to focusing tube guide, No. 1-72 NF-2 Thread	2AR

AR signifies As Required

Numerical List

FIG.	PART NO.	KODAK MEDALIST	KODAK MEDALIST II	PART NAME	REQD.
30	107466		x	Focusing Tube Assembly	1
37	107519		x	Focusing Tube Guide Assembly	1
13,14,16, 17,18,19, 23,24	109286		x	Screw - Range finder cam return spring (1), Range finder end prism to bracket (1), Range finder cam follower arm to prism mount (3), Erecting prism to range finder plate (1), Erecting and coincidence prism assembly to range finder plate (2), Left end prism bracket to mount (3), Left end prism retaining (1), Erecting prism to mount retaining (2), Safety control idler gear retaining (1)	AR
34	109288	x	x	Lever - Shutter operating	1
23	117002		x	Screw - Shutter setting gear stop lever	1
23	117003		x	Bearing - Shutter setting gear stop lever	1
23	117005		x	Spring - Shutter setting gear	1
23,24	117006	x	x	Screw - Shutter setting gear to shaft	1
23	117007		x	Shutter Setting Gear Assembly	1
25	117887	x	x	Screw - Safety lever spring stop plate to mechanism plate	AR
45	117941		x	Terminal Assembly	1
45	117942		x	Sleeve - Terminal	1
38	120104	x	x	Bracket - Range finder adjusting screw	1
7	123796	x	x	Knob - Film winding (Medalist and Medalist II Early Model)	1
24	760381	x	x	Lever - Shutter setting gear stop	1
27	760388	x		Plate - Trigger	1
45	760389	x		Covering - Case, left	1
20	760397		x	Range Finder Plate Assembly (Early Model)	1
10	760399	x		Time Lever Housing Assembly	1
31	760450	x	x	Spool Housing Assembly, left	1

AR signifies As Required

FIELD CASE FOR KODAK MEDALIST AND KODAK MEDALIST II CAMERAS

Numerical List

FIG.	PART NO.	PART NAME	REQD.
47	69265	Stud - Neck strap	2
47	86710	Body Assembly	1
46	86711	Front Cover Assembly	1
47	87404	Loop Assembly	2
47	87539	Neck Strap Assembly	1
47	98361	Cap	4
47	98362	Eyelet	4
46	109433	Cap	3
46	109434	Socket	3
46,47	109436	Stud	3
46,47	117843	Post	3
47	123188	Screw - Tripod	1

Numerical List

FIG.	PART NO.	PART NAME	REQD.
52	55324	Stud - Film holder latch	1
53	66707	Spring - Hinge pin	2
53	69371	Screw - Hinge grip guide to back	4
50	77264	Rivet - Ground-glass frame pressure spring	2
53	77622	Pin - Hinge	4
53	78881	Guide - Hinge grip	2
53	78927	Covering	1
53	78941	Grip - Hinge	4
48	81372	Lens - Magnifying	1
50	85813	Latch - Ground-glass frame	1
50	85814	Spring - Ground-glass frame latch	1
52	85816	Guide - Spacer frame, upper	1
52	85817	Guide - Spacer frame, lower	1
50	85818	Spring - Ground-glass frame pressure	2
48	85822	Spring - Hood latch	1
51	85823	Screw - Spacer frame to back	4
53	85824	Stud - Spacer frame adjusting	4
49	85825	Ground Glass	1
53	85827	Lug - Interlock actuating	1
51	85833	Strip - Leak light	1
48	85837	Rivet - Hood latch spring	2
53	85838	Screw - Interlock actuating lug to back	2
52	85848	Latch - Film holder	1
48	85859	Focusing Hood Assembly	1
52	86265	Spacer Frame End Assembly	1
53	86267	Back Assembly	1
50	90899	Rivet - Ground-glass frame latch	1
52	109285	Screw - Spacer frame end assembly to spacer frame	4
52	109532	Screw - Upper and lower spacer frame guide	6
49,50	126199	Ground Glass Frame Assembly	1

EXTENSION UNIT FOR ACCESSORY BACK FOR KODAK MEDALIST AND KODAK MEDALIST II CAMERAS

Numerical List

FIG.	PART NO.	PART NAME	REQD.
55	55324	Stud - Film holder latch	1
54	60212	Screw - Spacer frame end assembly	4
55	85816	Guide - Spacer frame, upper	1
54	85817	Guide - Spacer frame, lower	1
56	85833	Strip - Leak light	1
55	85848	Latch - Film holder	1
54	86265	Spacer Frame End Assembly	1
55	86269	Covering	1
54,55	109532	Screw - Upper and lower spacer frame guide	6

11-52-GLP-C

Lithographed in the United States of America

EASTMAN KODAK COMPANY
ROCHESTER 4, N. Y.